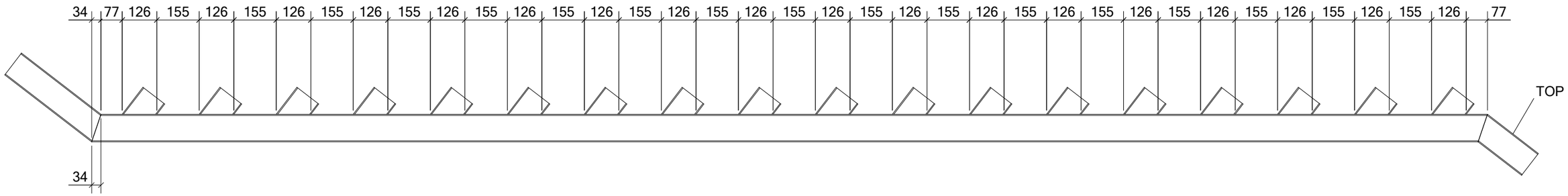

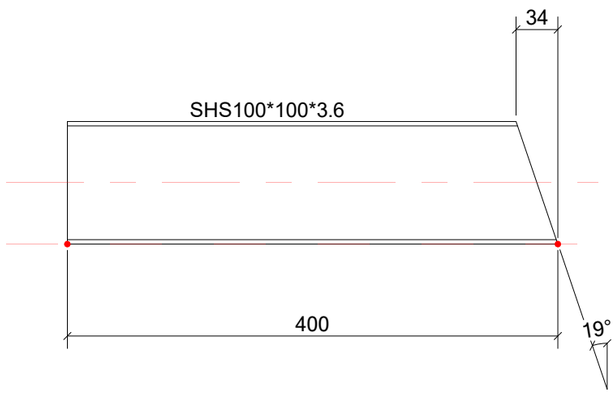

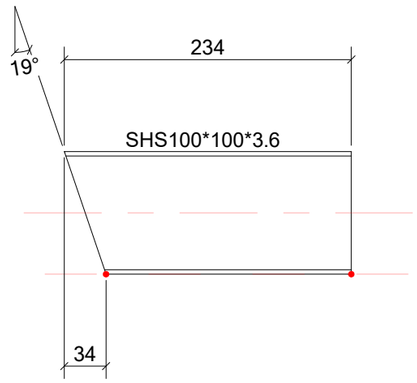

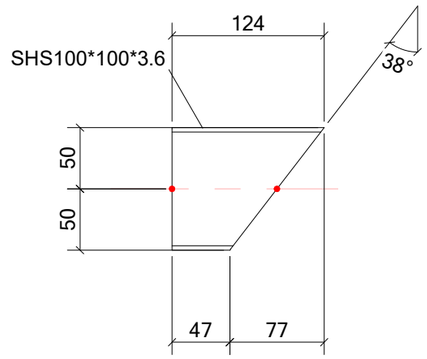

18 PCS THUS

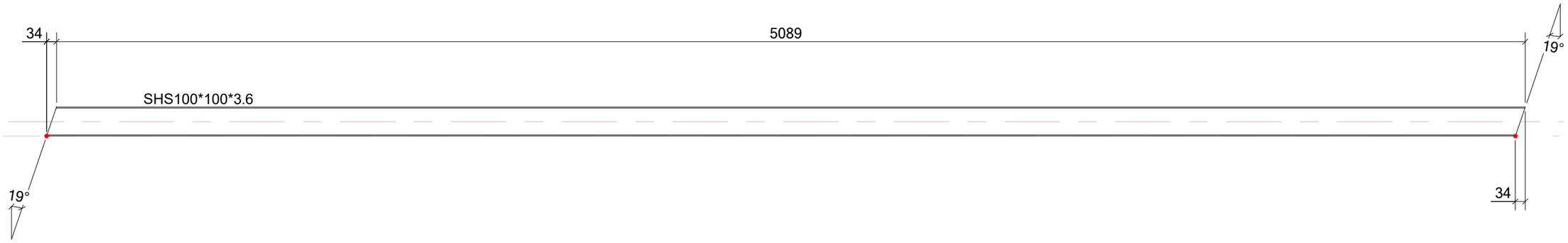

Tekla structures