Chassis: TOP View

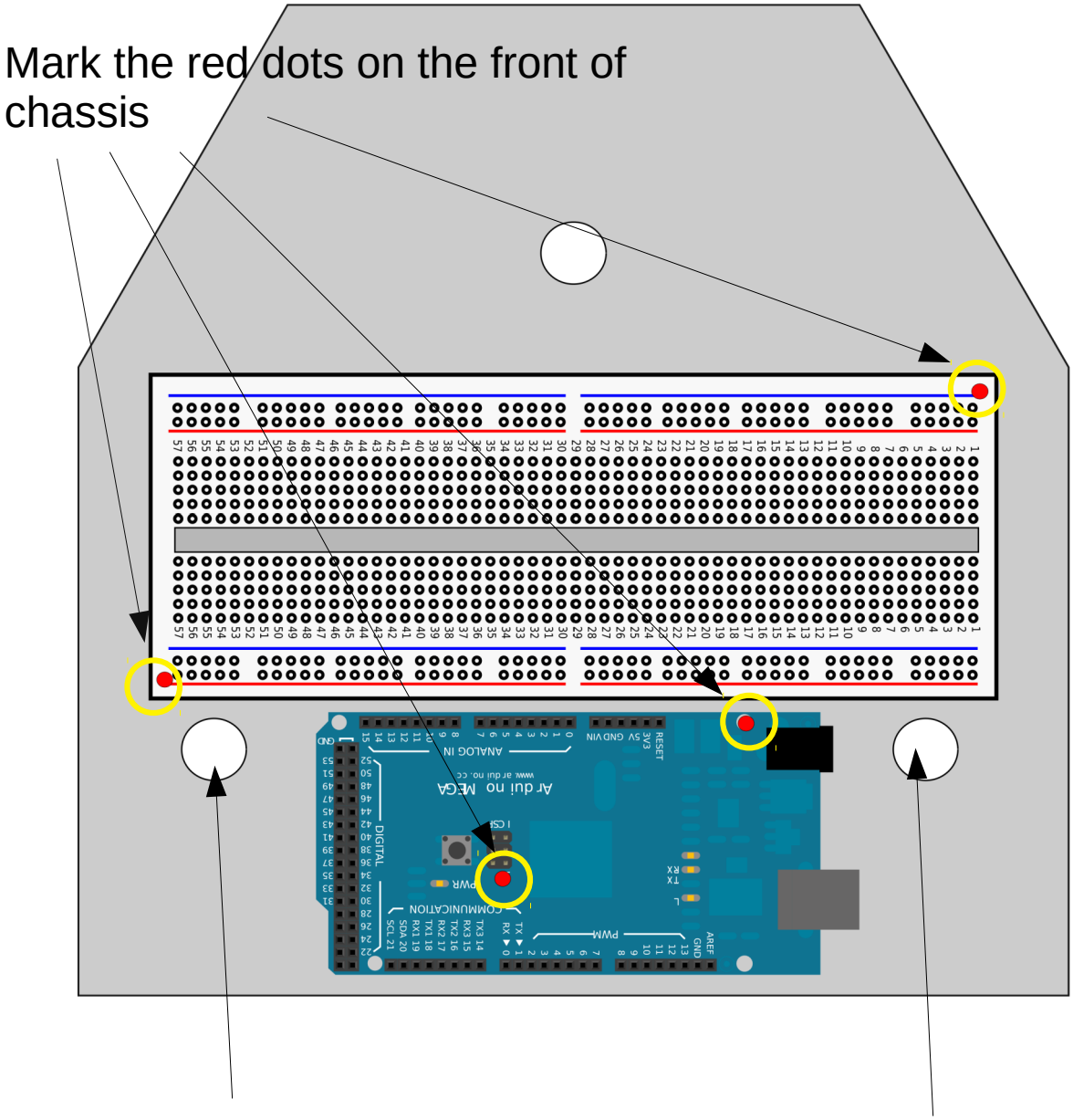

Chassis: Bottom View

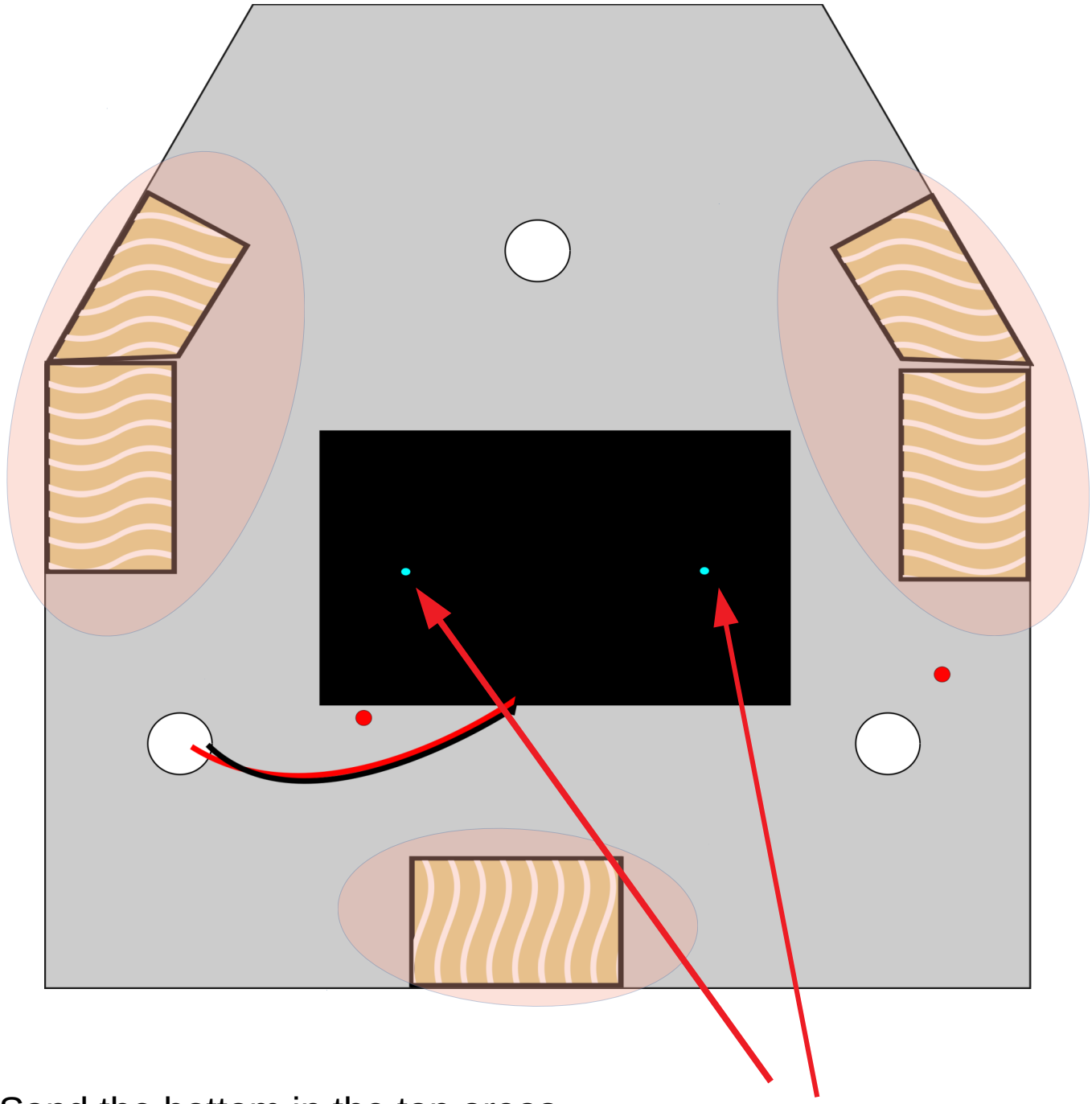

Sand the bottom in the tan areas.
Mark blue dots, measuring off of the battery holder.

Bottom with Dual Lock and Motors

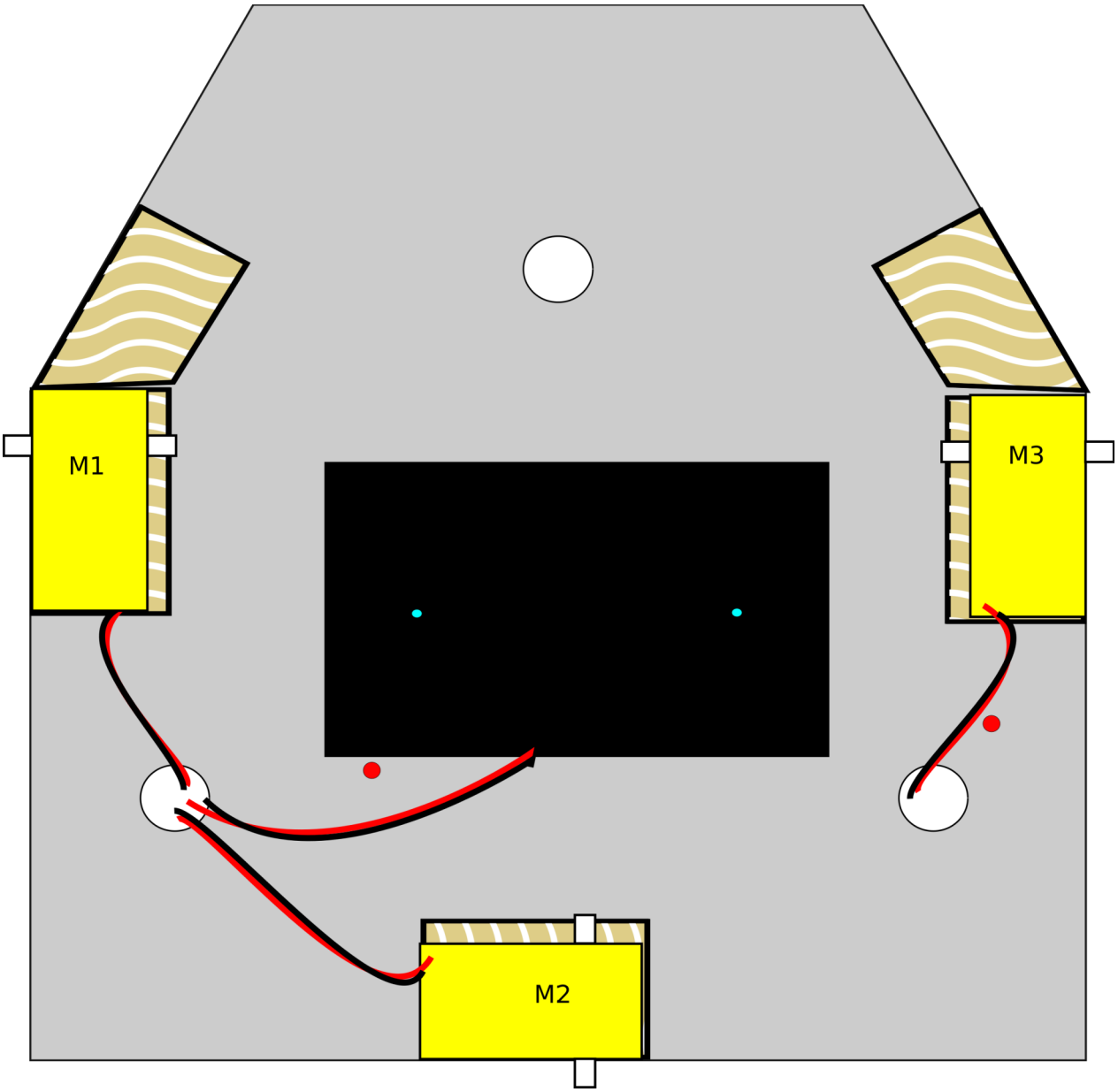

Top with Breadboard and Mega and Motor Shield

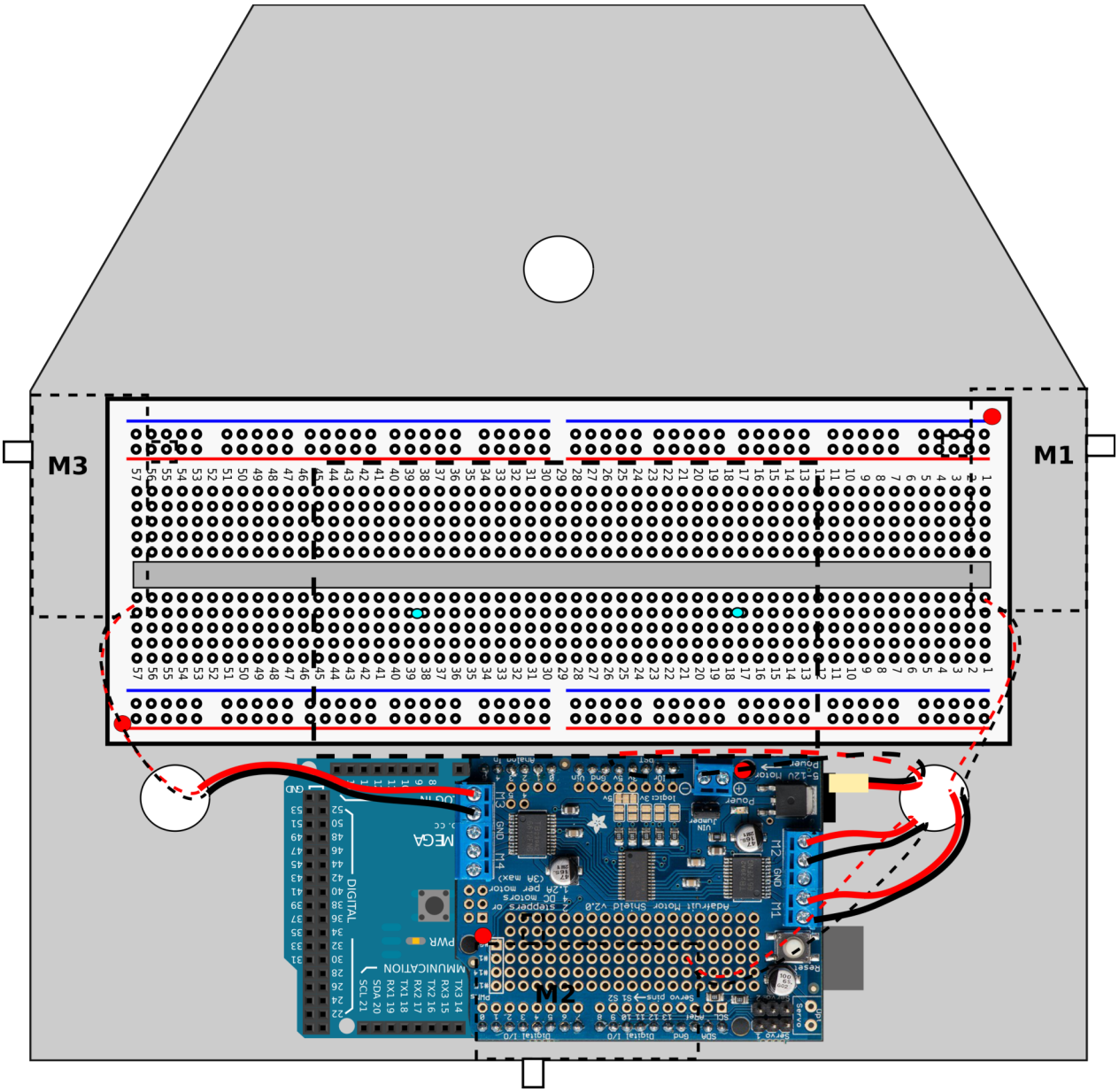

Basic Power Supply

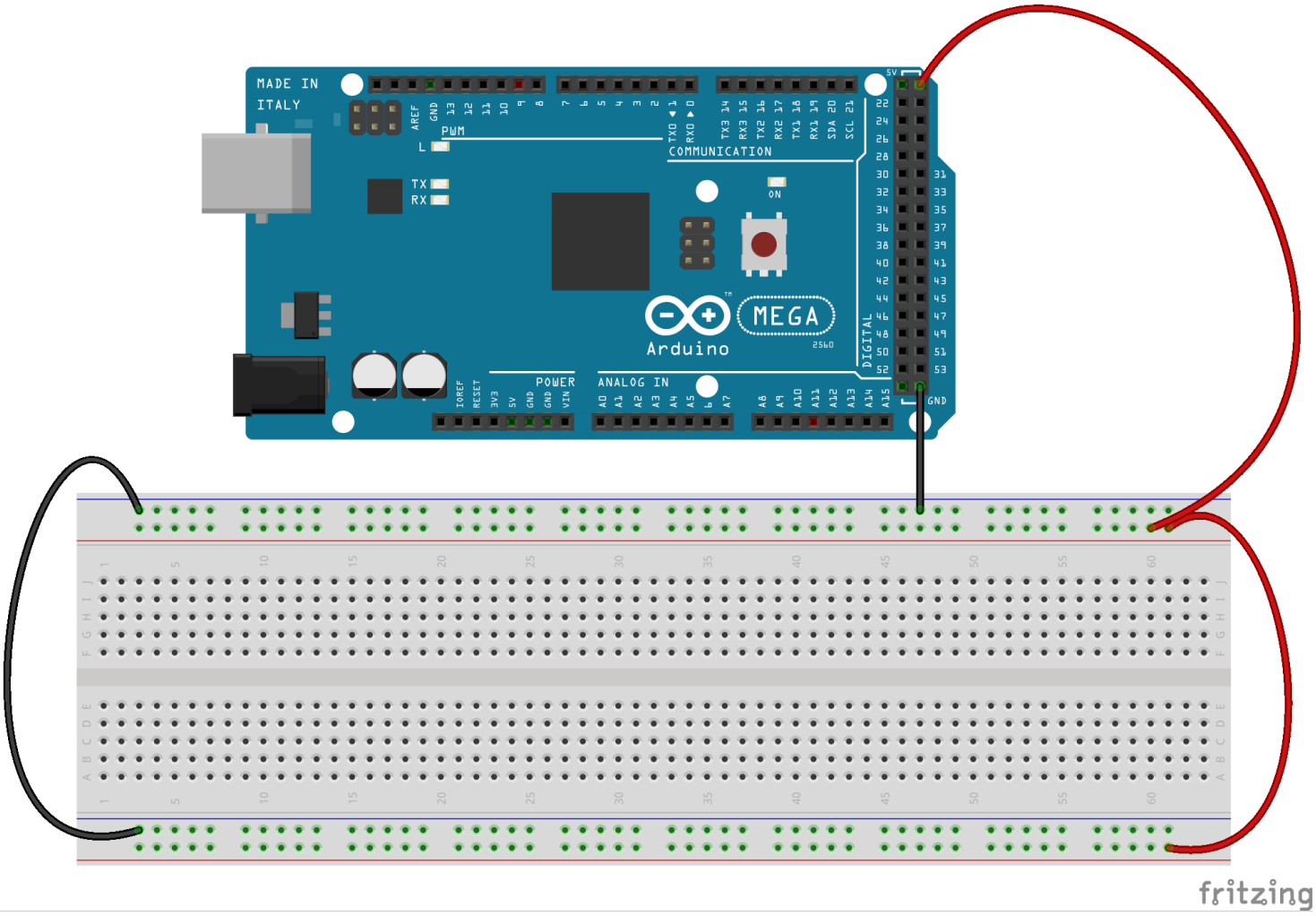

Add Blink Circuit

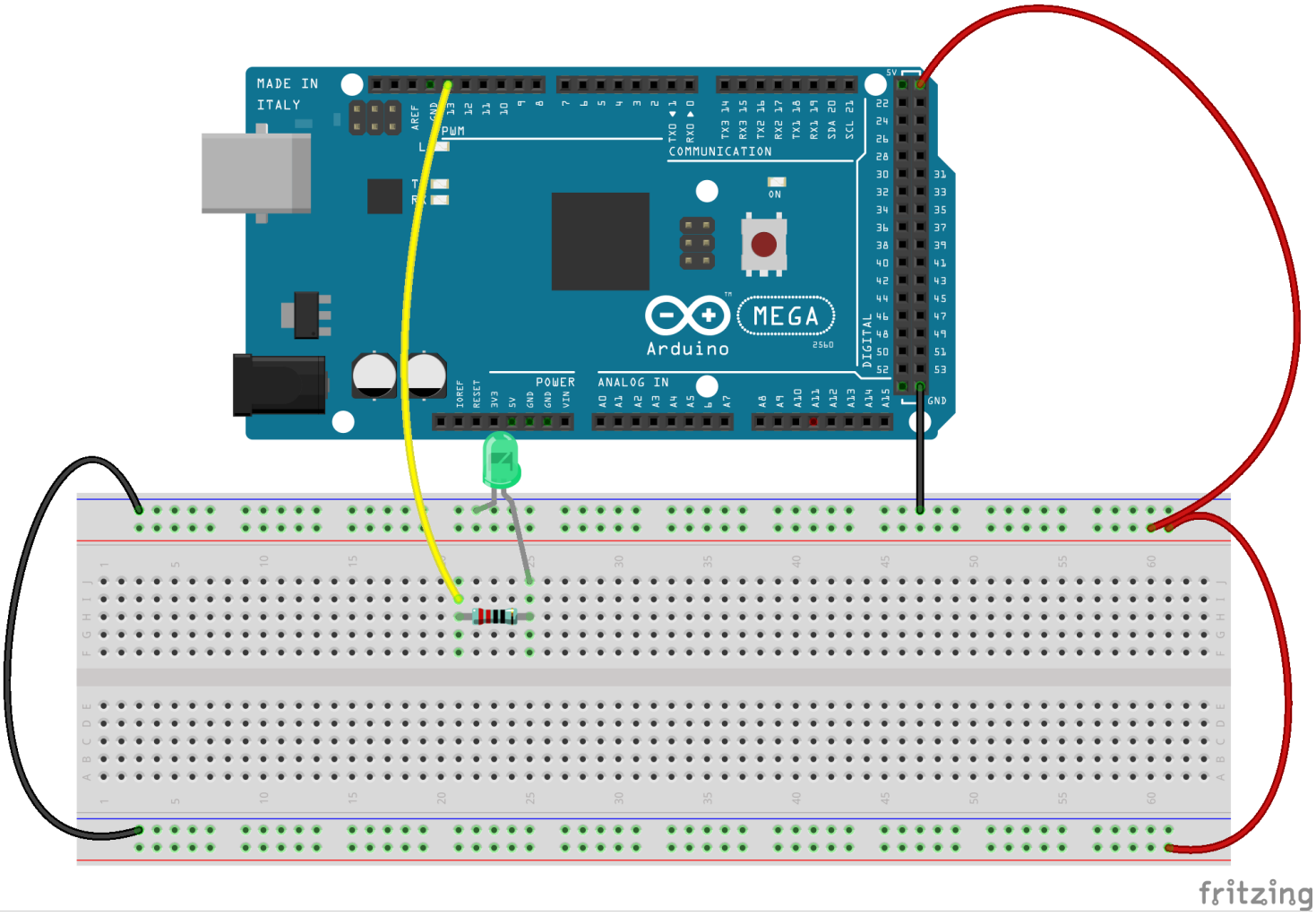

Add Bump Sensors

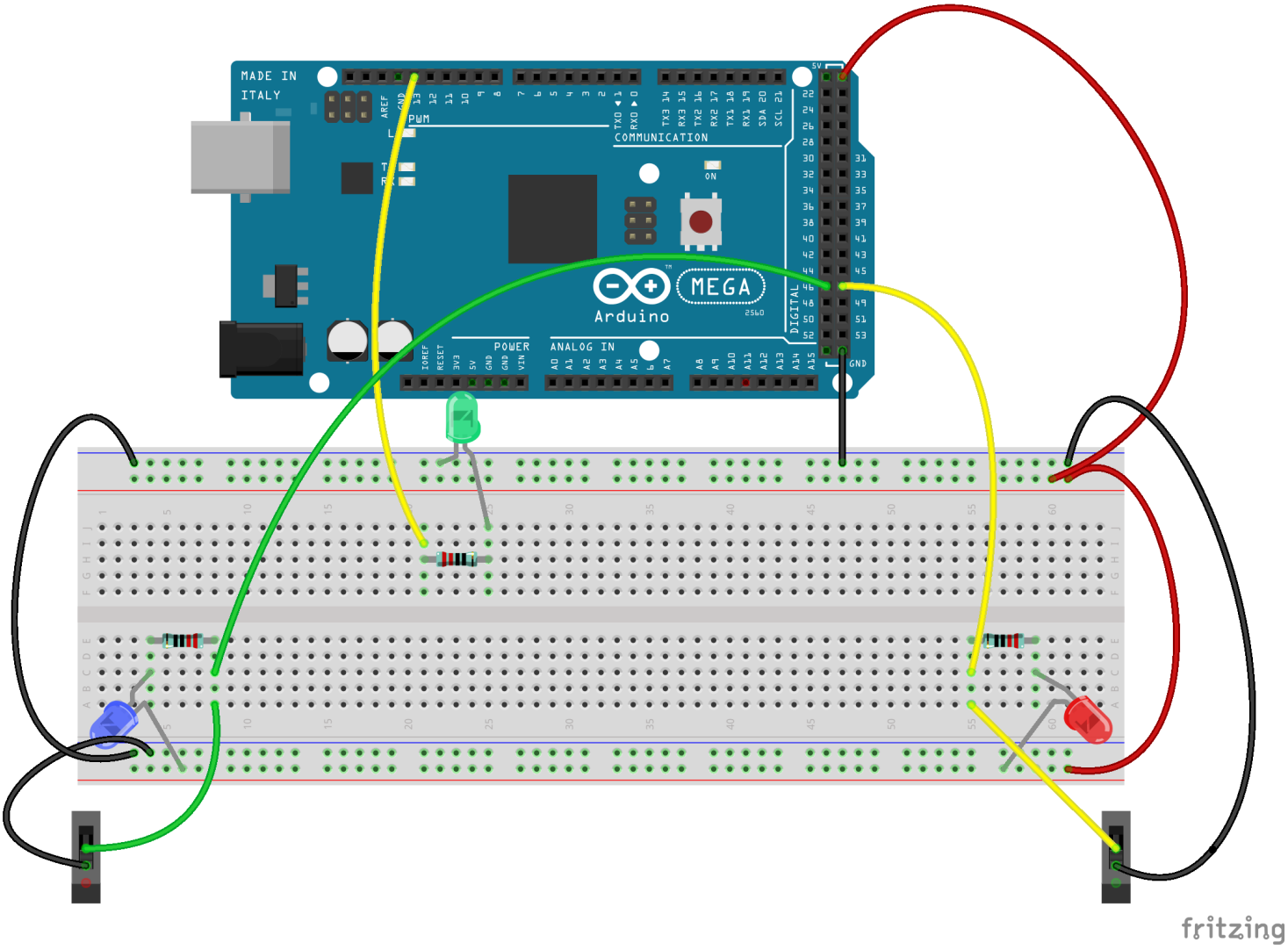

Add Light Sensors

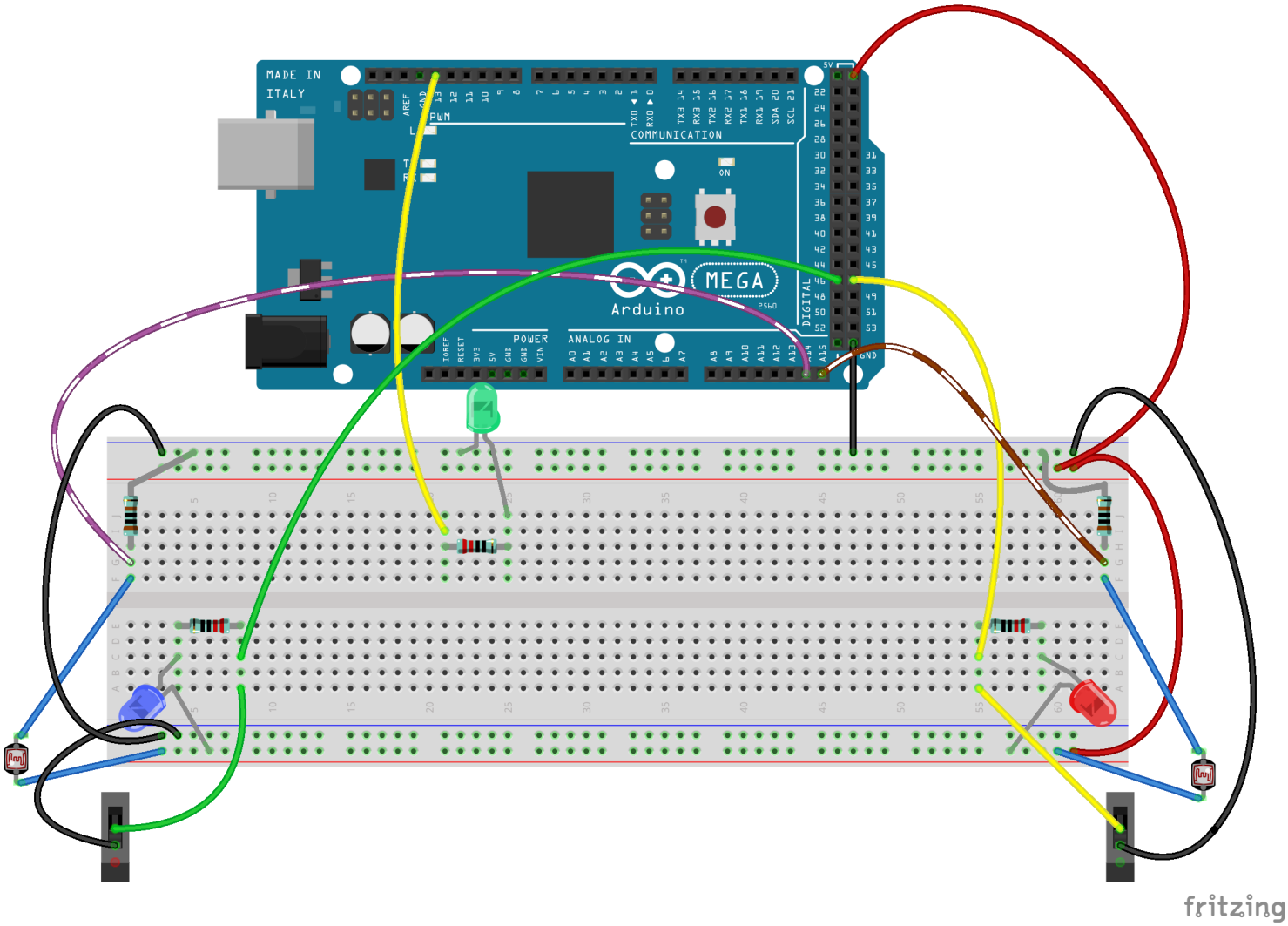

Add IR Sensors

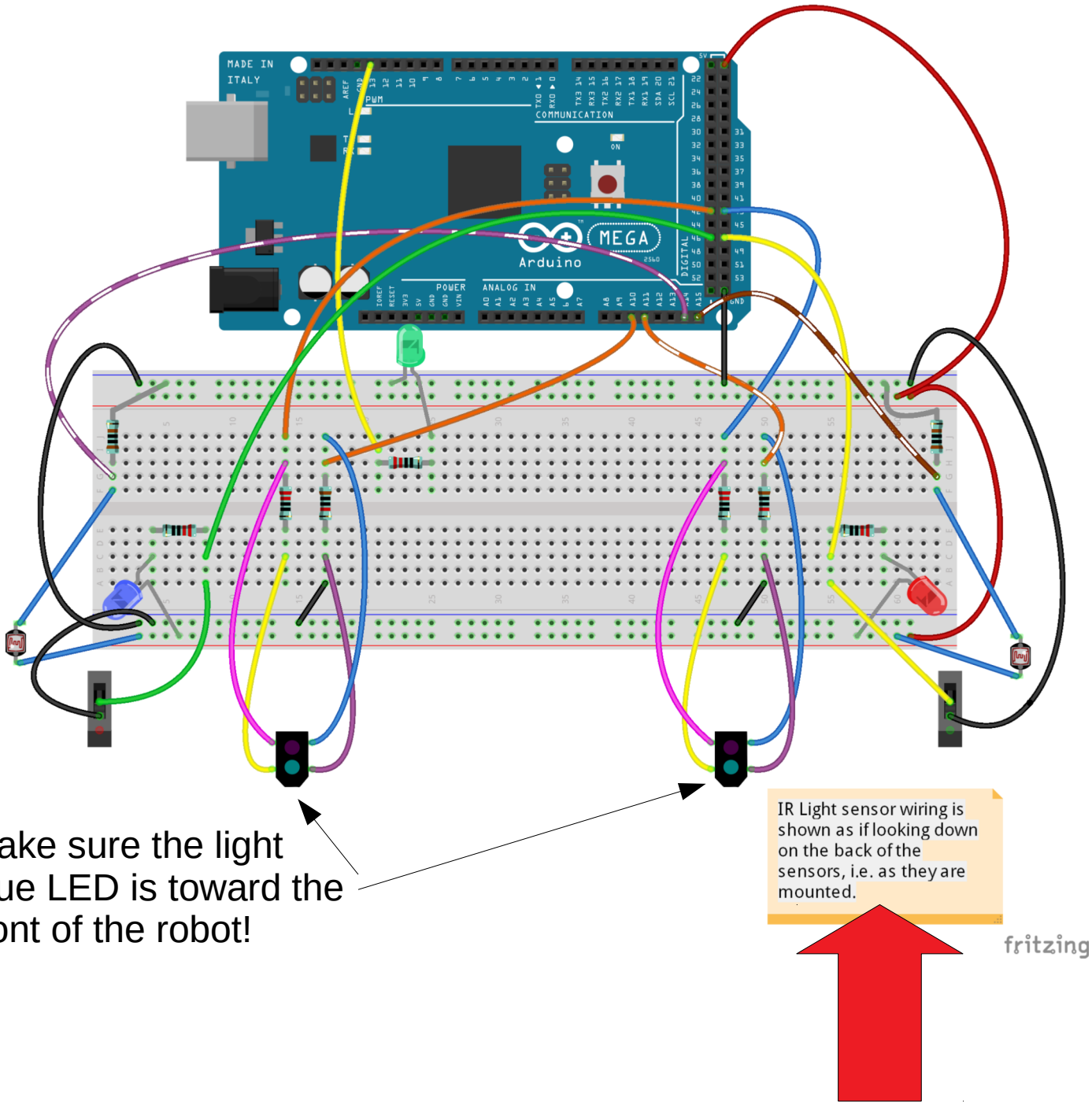

Make sure the light blue LED is toward the front of the robot!

Add Sonic Sensor and Servo Motors

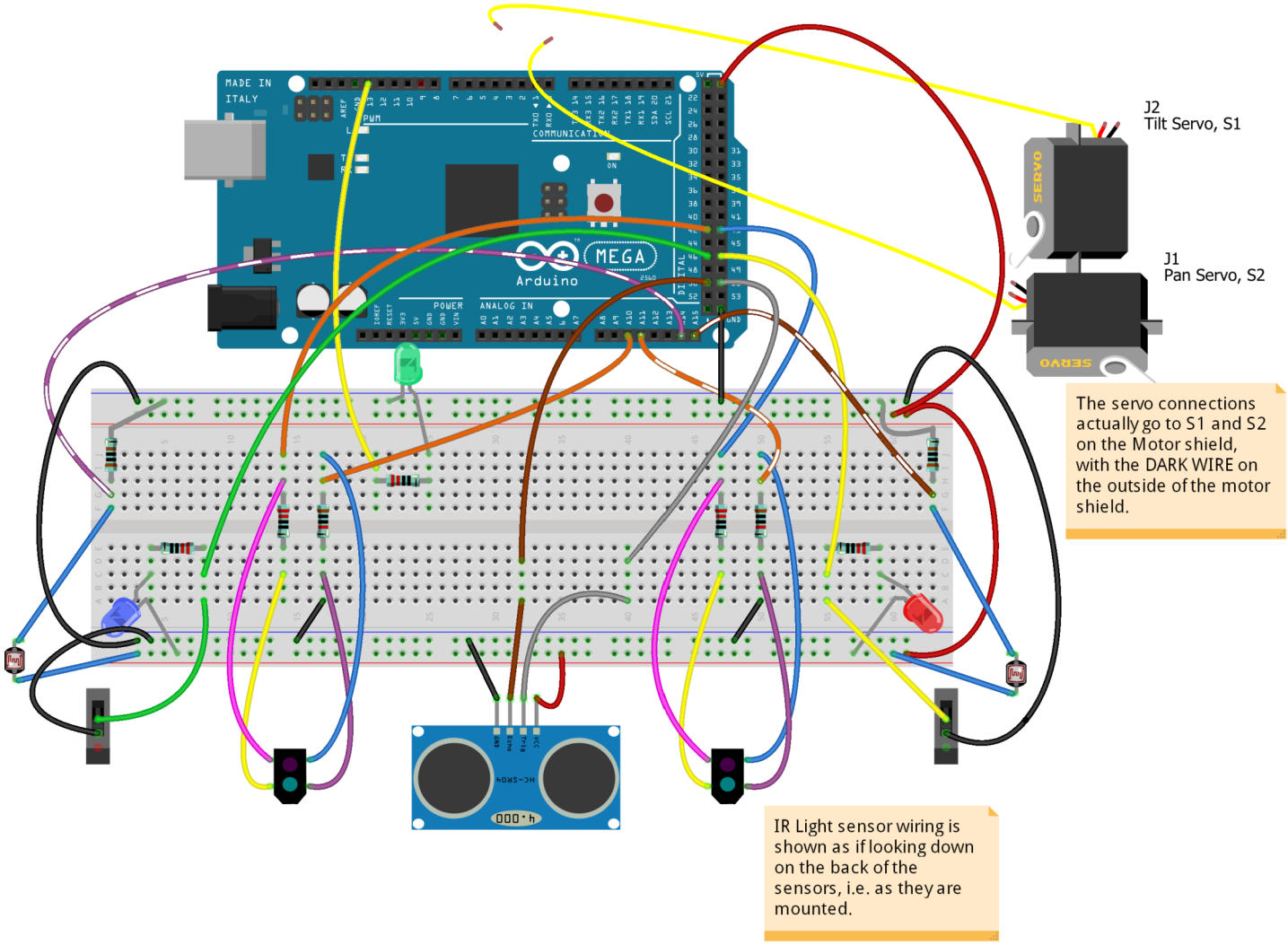

fritzing