Information technology —
Telecommunications and information exchange between systems —
Local and metropolitan networks — specific requirements
Part 3: Carrier Sense Multiple Access with Collision Detection (CSMA/CD) Access Method and Physical Layer Specifications —

Amendment: Physical Layer and Management Parameters for 10 Gb/s Operation — Type 10GBASE-T

Sponsor

LAN MAN Standards Committee
of the
IEEE Computer Society

This Draft amendment to IEEE Std. 802.3 provides support to extend 10 Gb/s operation over ISO/IEC 11801:2002 Class E and Class F channels with a new Physical Layer (PHY) device. The PHY is known as 10GBASE-T. This draft D1.4 is being circulated as part of Task Force Ballot. The formal expiration date of this draft is March 18, 2005.

Copyright © 2005 by the Institute of Electrical and Electronics Engineers, Inc.
3 Park Avenue
New York, NY 10016-5997, USA

All rights reserved. This document is an unapproved draft of a proposed IEEE Standard. As such, this document is subject to change. USE AT YOUR OWN RISK! Because this is an unapproved draft, this document must not be utilized for any conformance/compliance purposes. Permission is hereby granted for IEEE Standards Committee participants to reproduce this document for purposes of IEEE standardization activities only. Prior to submitting this document to another standards development organization for standardization activities, permission must first be obtained from the Manager, Standards Licensing and Contracts, IEEE Standards Activities Department. Other entities seeking permission to reproduce this document, in whole or in part, must obtain permission from the Manager, Standards Licensing and Contracts, IEEE Standards Activities Department.

IEEE Standards Activities Department
Standards Licensing and Contracts
445 Hoes Lane, P.O. Box 1331
Piscataway, NJ 08855-1331, USA

Copyright © 2005 IEEE. All rights reserved.

Revisions to IEEE P802.3REVam, Clause 1

EDITORIAL NOTES - This revision is based on the current edition of IEEE P802.3REVam. The editing instructions define how to merge the material contained here into this base document set to form the new comprehensive standard as created by the addition of P802.3an.

Editing instructions are shown in ***bold italic***. Three editing instructions are used: change, delete, and insert. ***Change*** is used to make small corrections in existing text or tables. The editing instruction specifies the location of the change and describes what is being changed either by using ~~strikethrough~~ (to remove old material) or underscore (to add new material). ***Delete*** removes existing material. ***Insert*** adds new material without disturbing the existing material. Insertions may require renumbering. If so, renumbering instructions are given in the editing instruction. Editorial notes will not be carried over into future editions.

1.3 Normative references

Insert the following normative reference in alphabetic order.

ANSI/TIA-TSB-155; Additional guidelines for 4-pair 100 Ω Category 6 Cabling for 10GBASE-T Applications.

ANSI/TIA/EIA-568-B.2-10; Transmission performance specifications for 4-pair 100 Ω augmented Category 6 cabling.

1.4 Definitions

Insert the following definition in alphabetic order:

1.4.xxx 10GBASE-T: IEEE 802.3 Physical Layer specification for a 10 Gb/s LAN using four pairs of Class E or Class F balanced copper cabling. (See IEEE 802.3 Clause 55.)

1.4.xxx DSQ128: A 128 point double square (DSQ) constellation mapping. This constellation can be obtained by taking a 2D constellation with 16-level pulse amplitude modulation (PAM16) on each dimension and eliminating half the points to create a checker board pattern. (See IEEE 802.3 Clause 55.)

1.4.xxx 64B/65B transmission code: A 64-bit block that is scrambled and prepended with a single bit to indicate whether the block contains data only or a mix of data and control information. (See IEEE 802.3 Clause 55.)

1.4.xxx LDPC(1723,2048) frame: 64B/65B transmission code blocks mapped into a low density parity check (LDPC) frame with 1723 coded bits, 325 check bits and 1536 uncoded bits. (See IEEE 802.3 Clause 55).

1.5 Abbreviations

Insert the following abbreviations in alphabetic order:

Cat 6	Category 6 balanced cabling
DSQ	double square
LDPC	low density parity check

Copyright © 2005 IEEE. All rights reserved.
This is an unapproved draft, subject to change

Copyright © 2005 IEEE. All rights reserved.
This is an unapproved draft, subject to change

Revisions to IEEE Draft P802.3REVam Clause 28

EDITORIAL NOTES - This supplement is based on the current draft of IEEE Draft P802.3REVam/D2.1. The editing instructions define how to merge the material contained here into this base document set to form the new comprehensive standard as created by the addition of P802.3an.

Editing instructions are shown in ***bold italic***. Three editing instructions are used: change, delete, and insert. ***Change*** is used to make small corrections in existing text or tables. The editing instruction specifies the location of the change and describes what is being changed either by using ~~strikethrough~~ (to remove old material) or underscore (to add new material). ***Delete*** removes existing material. ***Insert*** adds new material without disturbing the existing material. Insertions may require renumbering. If so, renumbering instructions are given in the editing instruction. Editorial notes will not be carried over into future editions.

Editors' Notes: *To be removed prior to final publication.*

References:
None.

Definitions:
None.

Abbreviations:
None.

Revision History:

Draft 1.0, September 2004	First draft for IEEE P802.3an Task Force review.
Draft 1.1, October 2004	Second draft for IEEE P802.3an Task Force review.
Draft 1.2, December 2004	Third draft for IEEE P802.3an Task Force review.
Draft 1.3, January 2005	Fourth draft for IEEE P802.3an Task Force review.
Draft 1.4, February 2005	Fifth draft for IEEE P802.3an Task Force review.

Copyright © 2005 IEEE. All rights reserved.
This is an unapproved IEEE Standards Draft, subject to change.

28. Physical Layer link signaling for 10 Mb/s, 100 Mb/s, ~~and~~ 1000 Mb/s, and 10Gb/s Auto-Negotiation on twisted pair

Change title of Clause to include 10Gbps

28.2.1.1.1 FLP burst encoding

Change subclause 28.2.1.1.1 as follows

FLP Bursts shall be composed of link pulses meeting the requirements of Figure 14–12. A Fast Link Pulse Burst consists of 33 pulse positions. The 17 odd-numbered pulse positions shall contain a link pulse and represent clock information. The 16 even-numbered pulse positions shall represent data information as follows: a link pulse present in an even-numbered pulse position represents a logic one, and a link pulse absent from an even-numbered pulse position represents a logic zero. Clock pulses are differentiated from data pulses by the spacing between pulses as shown in Figure 28–5 and enumerated in Table 28–1. Extended FLP Bursts contain 97 pulse positions with 49 clock pulses and 48 data pulses.

The encoding of data using pulses in an FLP Burst is illustrated in Figure 28–4.

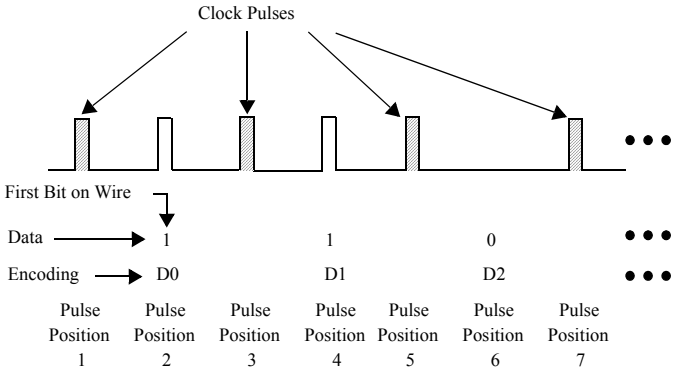

Figure 28–4—Data bit encoding within FLP Bursts

28.2.1.1.2 Transmit timing

Change Figure 28-6 to include "or T7" next to T6, and change subclause as follows. Also change Table 28-1, adding row T7 and changing T4 and T5 as shown.

The first pulse in an FLP Burst shall be defined as a clock pulse. Clock pulses within an FLP Burst shall be spaced at 125 ± 14 µs. If the data bit representation of logic one is to be transmitted, a pulse shall occur 62.5 ± 7 µs after the preceding clock pulse. If a data bit representing logic zero is to be transmitted, there shall be no link integrity test pulses within 111 µs of the preceding clock pulse.

The first link pulse in consecutive FLP Bursts shall occur at a 16 ± 8 ms interval when using non-optimized FLP Burst to FLP Burst timing, see parameter T6 (Figure 28–6). Devices supporting Extended Next Pages shall use optimized FLP Burst to FLP Burst timing. The first link pulse in consecutive FLP Bursts shall occur at a 8.25 ± 0.25 ms interval when using optimized FLP Burst to FLP Burst timing, see parameter T7 (Figure 28–6). Optimized FLP Burst to FLP Burst limits are intended to reduce negotiation time.~~(Figure 28–6)~~.

Copyright © 2005 IEEE. All rights reserved.
This is an unapproved IEEE Standards Draft, subject to change.

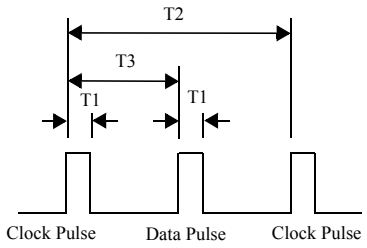

Figure 28–5—FLP Burst pulse-to-pulse timing

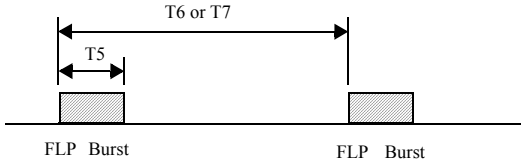

Figure 28–6—FLP Burst to FLP Burst timing

Table 28–1—FLP Burst timing summary

#	Parameter	Min.	Typ.	Max.	Units
T1	Clock/Data Pulse Width (Figure 14–12)		100		ns
T2	Clock Pulse to Clock Pulse	111	125	139	µs
T3	Clock Pulse to Data Pulse (Data = 1)	55.5	62.5	69.5	µs
T4	Pulses in a Burst	17for 16-bit 49 for 48-bit		33 for 16-bit 97 for 48-bit	#
T5	Burst Width		2 for 16-bit 6 for 48-bit		ms
T6	FLP Burst to FLP Burst	8	16	24	ms
T7	Optimized FLP Burst to FLP Burst	8		8.5	ms

28.2.1.2 Link Code Word encoding

The base Link Code Word (base page) transmitted within an FLP Burst shall convey the encoding shown in Figure 28–7. The Auto-Negotiation function may support additional pages using the Next Page function. Encodings for the Link Code Word(s) used in Next Page exchange are defined in 28.2.3.4. In an FLP Burst, D0 shall be the first bit transmitted.

28.2.1.2.1 Selector Field

Selector Field (S[4:0]) is a five bit wide field, encoding 32 possible messages. Selector Field encoding definitions are shown in Annex 28A. Combinations not specified are reserved for future use. Reserved combinations of the Selector Field shall not be transmitted.

Copyright © 2005 IEEE. All rights reserved.
This is an unapproved IEEE Standards Draft, subject to change.

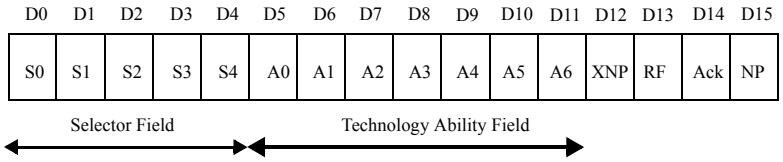

Figure 28–7—Base page encoding

28.2.1.2.2 Technology Ability Field

Change 28.2.1.2.2 as follows

Technology Ability Field (A[~~7~~6:0]) is a~~n~~ ~~eight~~ seven bit wide field containing information indicating supported technologies specific to the selector field value. These bits are mapped to individual technologies such that abilities are advertised in parallel for a single selector field value. The Technology Ability Field encoding for the IEEE 802.3 selector is described in Annex 28B.2 and in Annex 28D. Multiple technologies may be advertised in the Link Code Word. A device shall support the data service ability for a technology it advertises. It is the responsibility of the Arbitration function to determine the common mode of operation shared by a Link Partner and to resolve multiple common modes.

NOTE—While devices using a Selector Field value other than the IEEE 802.3 Selector Field value are free to define the Technology Ability Field bits, it is recommended that the 10BASE-T bit be encoded in the same bit position as in the IEEE 802.3 selector. A common bit position can be important if the technology using the other selector will ever coexist on a device that also offers a 10BASE-T mode.

Insert 28.2.1.2.3 and renubmer subsequent subclauses

28.2.1.2.3 Extended Next Page

Extended Next Page (XNP) is encoded in bit D12 of the base Link Code word. The Extended Next Page bit indicates that the local device supports transmission of extended next pages when set to a logic one, and indicates that the local device does not support extended next pages when set to a logic zero.

The use of Extended Next Page is orthogonal to the negotiated date rate, medium, or link technology. This ability shall be enabled at the end of base page exchange when both sides have indicated that they support the ability. Otherwise the ability shall be disabled.

28.2.1.2.4 Remote Fault

Remote Fault (RF) is encoded in bit D13 of the base Link Code Word. The default value is logic zero. The Remote Fault bit provides a standard transport mechanism for the transmission of simple fault information. When the RF bit in the Auto-Negotiation advertisement register (Register 4) is set to logic one, the RF bit in the transmitted base Link Code Word is set to logic one. When the RF bit in the received base Link Code Word is set to logic one, the Remote Fault bit in the MII status register (Register 1) will be set to logic one, if the MII management function is present.

The Remote Fault bit shall be used in accordance with the Remote Fault function specifications (28.2.3.5).

Copyright © 2005 IEEE. All rights reserved.
This is an unapproved IEEE Standards Draft, subject to change.

28.2.1.2.5 Acknowledge

Acknowledge (Ack) is used by the Auto-Negotiation function to indicate that a device has successfully received its Link Partner's Link Code Word. The Acknowledge Bit is encoded in bit D14 regardless of the value of the Selector Field or Link Code Word encoding. If no Next Page information is to be sent, this bit shall be set to logic one in the Link Code Word after the reception of at least three consecutive and consistent FLP Bursts (ignoring the Acknowledge bit value). If Next Page information is to be sent, this bit shall be set to logic one after the device has successfully received at least three consecutive and matching FLP Bursts (ignoring the Acknowledge bit value), and will remain set until the Next Page information has been loaded into the Auto-Negotiation Next Page transmit register (Register 7). In order to save the current received Link Code Word, it must be read from the Auto-Negotiation link partner ability register (Register 6) before the Next Page of transmit information is loaded into the Auto-Negotiation Next Page transmit register. After the COMPLETE ACKNOWLEDGE state has been entered, the Link Code Word shall be transmitted six to eight (inclusive) times.

28.2.1.2.6 Next Page

Next Page (NP) is encoded in bit D15 regardless of the Selector Field value or Link Code Word encoding. Support for transmission and reception of additional Link Code Word encodings is optional. If Next Page ability is not supported, the NP bit shall always be set to logic zero. If a device implements Next Page ability and wishes to engage in Next Page exchange, it shall set the NP bit to logic one. A device may implement Next Page ability and choose not to engage in Next Page exchange by setting the NP bit to a logic zero. The Next Page function is defined in 28.2.3.4.

28.2.1.3 Transmit Switch function

The Transmit Switch function shall enable the transmit path from a single technology-dependent PMA to the MDI once a highest common denominator choice has been made and Auto-Negotiation has completed.

During Auto-Negotiation, the Transmit Switch function shall connect only the FLP Burst generator controlled by the Transmit State Diagram, Figure 28–15, to the MDI.

When a PMA is connected to the MDI through the Transmit Switch function, the signals at the MDI shall conform to all of the PHY's specifications.

28.2.2 Receive function requirements

The Receive function detects the NLP sequence using the NLP Receive Link Integrity Test function of Figure 28–18. The NLP Receive Link Integrity Test function will not detect link pass based on carrier sense.

The Receive function detects the FLP Burst sequence, decodes the information contained within, and stores the data in rx_link_code_word[16:1]. The Receive function incorporates a receive switch to control connection to the 100BASE-TX or 100BASE-T4 PMAs in addition to the NLP Receive Link Integrity Test function, excluding the 10BASE-T Link Integrity Test function present in a 10BASE-T PMA. If Auto-Negotiation detects link_status=READY from any of the technology-dependent PMAs prior to FLP Burst detection, the autoneg_wait_timer (28.3.2) is started. If any other technology-dependent PMA indicates link_status=READY when the autoneg_wait_timer expires, Auto-Negotiation will not allow any data service to be enabled and may signal this as a remote fault to the Link Partner using the base page and will flag this in the Local Device by setting the Parallel Detection Fault bit (6.4) in the Auto-Negotiation expansion register. If a 10BASE-T PMA exists above the Auto-Negotiation function, it is not permitted to receive MDI activity in parallel with the NLP Receive Link Integrity Test function or any other technology-dependent function.

Copyright © 2005 IEEE. All rights reserved.
This is an unapproved IEEE Standards Draft, subject to change.

28.2.2.1 FLP Burst ability detection and decoding

In Figures 28–8 to 28–10, the symbol "t_0=0" indicates the event that caused the timers described to start, and all subsequent times given are referenced from that point. All timers referenced shall expire within the range specified in Table 28–9 in 28.3.2.

The Receive function shall identify the Link Partner as Auto-Negotiation able if it receives 6 to 17 (inclusive) consecutive link pulses that are separated by at least flp_test_min_timer time (5–25 µs) but less than flp_test_max_timer time (165–185 µs) as shown in Figure 28–8. The information contained in the FLP Burst that identifies the Link Partner as Auto-Negotiation able shall not be passed to the Arbitration function if the FLP Burst is not complete. The Receive function may use the FLP Burst that identifies the Link Partner as Auto-Negotiation able for ability matching if the FLP Burst is complete. However, it is not required to use this FLP Burst for any purpose other than identification of the Link Partner as Auto-Negotiation able. Implementations may ignore multiple FLP Bursts before identifying the Link Partner as Auto-Negotiation able to allow for potential receive equalization time.

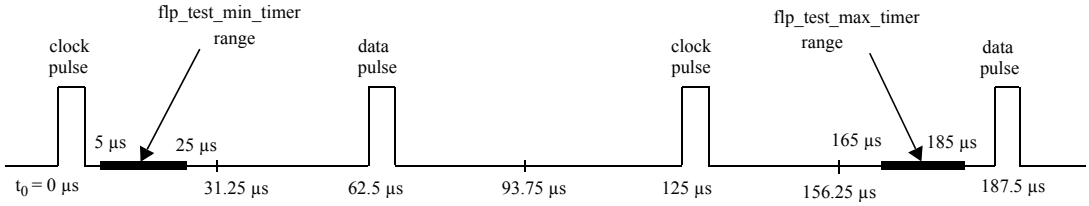

Figure 28–8—FLP detect timers (flp_test_min/max_timers)

The Receive function captures and decodes link pulses received in FLP Bursts. The first link pulse in an FLP Burst shall be interpreted as a clock link pulse. Detection of a clock link pulse shall restart the data_detect_min_timer and data_detect_max timer. The data_detect_min/max_timers enable the receiver to distinguish data pulses from clock pulses and logic one data from logic zero data, as follows:

a) If, during an FLP Burst, a link pulse is received when the data_detect_min_timer has expired while the data_detect_max_timer has not expired, the data bit shall be interpreted as a logic one (Figure 28–9).
b) If, during an FLP Burst, a link pulse is received after the data_detect_max_timer has expired, the data bit shall be interpreted as a logic zero (Figure 28–9) and that link pulse shall be interpreted as a clock link pulse.

As each data bit is identified it is stored in the appropriate rx_link_code_word[16:1] element.

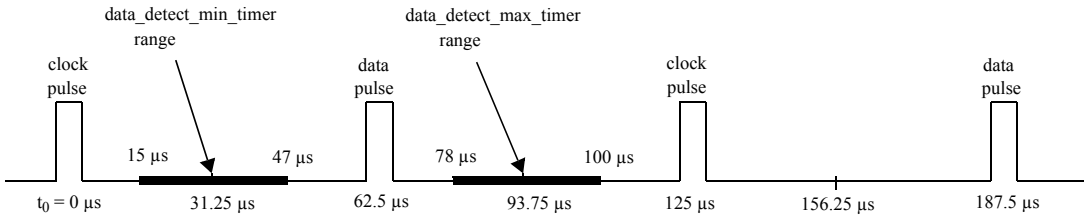

Figure 28–9—FLP data detect timers (data_detect_min/max_timers)

FLP Bursts conforming to the nlp_test_min_timer and nlp_test_max_timer timing as shown in Figure 28–10 shall be considered to have valid separation.

Copyright © 2005 IEEE. All rights reserved.
This is an unapproved IEEE Standards Draft, subject to change.

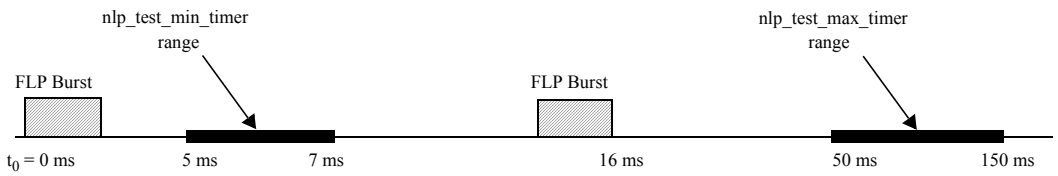

NOTE—The reference for the starting of the nlp_test_min_timer is from the beginning of the FLP Burst, as shown by t_0, while the reference for the starting of the nlp_test_max_timer is from the expiration of the nlp_test_min_timer.

Figure 28–10—FLP Burst timer (nlp_test_min/max_timers)

28.2.2.2 NLP detection

NLP detection is accomplished via the NLP Receive Link Integrity Test function in Figure 28–18. The NLP Receive Link Integrity Test function is a modification of the original 10BASE-T Link Integrity Test function (Figure 14–6), where the detection of receive activity will not cause a transition to the LINK TEST PASS state during Auto-Negotiation. The NLP Receive Link Integrity Test function also incorporates the Technology-Dependent Interface requirements.

28.2.2.3 Receive Switch function

The Receive Switch function shall enable the receive path from the MDI to a single technology-dependent PMA once a highest common denominator choice has been made and Auto-Negotiation has completed.

During Auto-Negotiation, the Receive Switch function shall connect both the FLP Burst receiver controlled by the Receive state diagram, Figure 28–16, and the NLP Receive Link Integrity Test state diagram, Figure 28–18, to the MDI. During Auto-Negotiation, the Receive Switch function shall also connect the 100BASE-TX and 100BASE-T4 PMA receivers to the MDI if the 100BASE-TX and/or 100BASE-T4 PMAs are present.

When a PMA is connected to the MDI through the Receive Switch function, the signals at the PMA shall conform to all of the PHY's specifications.

28.2.2.4 Link Code Word matching

The Receive function shall generate ability_match, acknowledge_match, and consistency_match variables as defined in 28.3.1.

28.2.3 Arbitration function requirements

The Arbitration function ensures proper sequencing of the Auto-Negotiation function using the Transmit function and Receive function. The Arbitration function enables the Transmit function to advertise and acknowledge abilities. Upon indication of acknowledgment, the Arbitration function determines the highest common denominator using the priority resolution function and enables the appropriate technology-dependent PMA via the Technology-Dependent Interface (28.2.6).

28.2.3.1 Parallel detection function

The Local Device detects a Link Partner that supports Auto-Negotiation by FLP Burst detection. The Parallel Detection function allows detection of Link Partners that support 100BASE-TX, 100BASE-T4, and/or 10BASE-T, but do not support Auto-Negotiation. Prior to detection of FLP Bursts, the Receive Switch shall direct MDI receive activity to the NLP Receive Link Integrity Test state diagram, 100BASE-TX and

Copyright © 2005 IEEE. All rights reserved.
This is an unapproved IEEE Standards Draft, subject to change.

100BASE-T4 PMAs, if present, but shall not direct MDI receive activity to the 10BASE-T or any other PMA. If at least one of the 100BASE-TX, 100BASE-T4, or NLP Receive Link Integrity Test functions establishes link_status=READY, the LINK STATUS CHECK state is entered and the autoneg_wait_timer is started. If exactly one link_status=READY indication is present when the autoneg_wait_timer expires, then Auto-Negotiation shall set link_control=ENABLE for the PMA indicating link_status=READY. If a PMA is enabled, the Arbitration function shall set link_control=DISABLE to all other PMAs and indicate that Auto-Negotiation has completed. On transition to the FLP LINK GOOD CHECK state from the LINK STATUS CHECK state the Parallel Detection function shall set the bit in the link partner ability register (Register 5) corresponding to the technology detected by the Parallel Detection function.

NOTE 1—Native 10BASE-T devices will be detected by the NLP Receive Link Integrity Test function, an integrated part of the Auto-Negotiation function. Hence, Parallel Detection for the 10BASE-T PMA is not required or allowed.

NOTE 2—When selecting the highest common denominator through the Parallel Detection function, only the half-duplex mode corresponding to the selected PMA may automatically be detected.

28.2.3.2 Renegotiation function

A renegotiation request from any entity, such as a management agent, shall cause the Arbitration function to disable all technology-dependent PMAs and halt any transmit data and link pulse activity until the break_link_timer expires (28.3.2). Consequently, the Link Partner will go into link fail and normal Auto-Negotiation resumes. The Local Device shall resume Auto-Negotiation after the break_link_timer has expired by issuing FLP Bursts with the base page valid in tx_link_code_word[16:1].

Once Auto-Negotiation has completed, renegotiation will take place if the Highest Common Denominator technology that receives link_control=ENABLE returns link_status=FAIL. To allow the PMA an opportunity to determine link integrity using its own link integrity test function, the link_fail_inhibit_timer qualifies the link_status=FAIL indication such that renegotiation takes place if the link_fail_inhibit_timer has expired and the PMA still indicates link_status=FAIL or link_status=READY.

28.2.3.3 Priority Resolution function

Since a Local Device and a Link Partner may have multiple common abilities, a mechanism to resolve which mode to configure is required. The mechanism used by Auto-Negotiation is a Priority Resolution function that predefines the hierarchy of supported technologies. The single PMA enabled to connect to the MDI by Auto-Negotiation shall be the technology corresponding to the bit in the Technology Ability Field common to the Local Device and Link Partner that has the highest priority as defined in Annex 28B. This technology is referred to as the Highest Common Denominator, or HCD, technology. If the Local Device receives a Technology Ability Field with a bit set that is reserved, the Local Device shall ignore that bit for priority resolution. Determination of the HCD technology occurs on entrance to the FLP LINK GOOD CHECK state. In the event that a technology is chosen through the Parallel Detection function, that technology shall be considered the highest common denominator (HCD) technology. In the event that there is no common technology, HCD shall have a value of “NULL,” indicating that no PMA receives link_control=ENABLE, and link_status_[HCD]=FAIL.

28.2.3.4 Next Page function

The Next Page function uses the standard Auto-Negotiation arbitration mechanisms to allow exchange of arbitrary pieces of data. Data is carried by optional Next Pages of information, which follow the transmission and acknowledgment procedures used for the base Link Code Word. Two types of Next Page encodings are defined: Message Pages and Unformatted Pages.

Copyright © 2005 IEEE. All rights reserved.

This is an unapproved IEEE Standards Draft, subject to change.

A dual acknowledgment system is used. Acknowledge (Ack) is used to acknowledge receipt of the information; Acknowledge 2 (Ack2) is used to indicate that the receiver is able to act on the information (or perform the task) defined in the message.

Next Page operation is controlled by the same two mandatory control bits, Next Page and Acknowledge, used in the Base Link Code Word. Setting the NP bit in the Base Link Code Word to logic one indicates that the device is Next Page Able. If both a device and its Link Partner are Next Page Able, then Next Page exchange may occur. If one or both devices are not Next Page Able, then Next Page exchange will not occur and, after the base Link Code Words have been exchanged, the FLP LINK GOOD CHECK state will be entered. The Toggle bit is used to ensure proper synchronization between the Local Device and the Link Partner.

Next Page exchange occurs after the base Link Code Words have been exchanged. Next Page exchange consists of using the normal Auto-Negotiation arbitration process to send Next Page messages. Two message encodings are defined: Message Pages, which contain predefined 11 bit codes, and Unformatted Pages. Unformatted Pages can be combined to send extended messages. If the Selector Field values do not match, then each series of Unformatted Pages shall be preceded by a Message Page containing a message code that defines how the following Unformatted Pages will be interpreted. If the Selector Field values match, then the convention governing the use of Message Pages shall be as defined by the Selector Field value definition. Any number of Next Pages may be sent in any order; however, it is recommended that the total number of Next Pages sent be kept small to minimize the link startup time.

Next Page transmission ends when both ends of a link segment set their Next Page bits to logic zero, indicating that neither has anything additional to transmit. It is possible for one device to have more pages to transmit than the other device. Once a device has completed transmission of its Next Page information, it shall transmit Message Pages with Null message codes and the NP bit set to logic zero while its Link Partner continues to transmit valid Next Pages. An Auto-Negotiation able device shall recognize reception of Message Pages with Null message codes as the end of its Link Partner's Next Page information.

28.2.3.4.1 Next Page encodings

The Next Page shall use the encoding shown in Figure 28–11 and Figure 28–12 for the NP, Ack, MP, Ack2, and T bits. The 11-bit field D10–D0 shall be encoded as a Message Code Field if the MP bit is logic one and an Unformatted Code Field if MP is set to logic zero

Insert subclause 28.3.4.2 as follows and renumber subsequent subclauses. Insert figure 28-13 and renumber following figures.

.

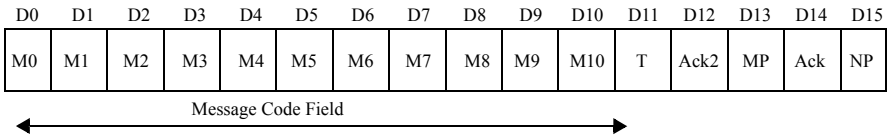

Figure 28–11—Message Page encoding

Copyright © 2005 IEEE. All rights reserved.
This is an unapproved IEEE Standards Draft, subject to change.

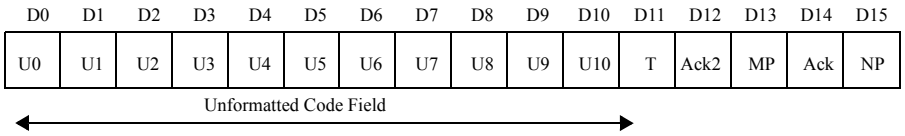

Figure 28–12—Unformatted Page encoding

28.2.3.4.2 Extended Next Page encodings

Extended Next Pages shall use the encoding shown in Figure 28-13 for the message code field, flags field, and unformatted code field. The Message Code Field contains the 11-bit Message Code value. The 5-bit flags field contains the NP, Ack, MP, Ack2, and T bits. The Unformatted Code Field contains a 32-bit value.

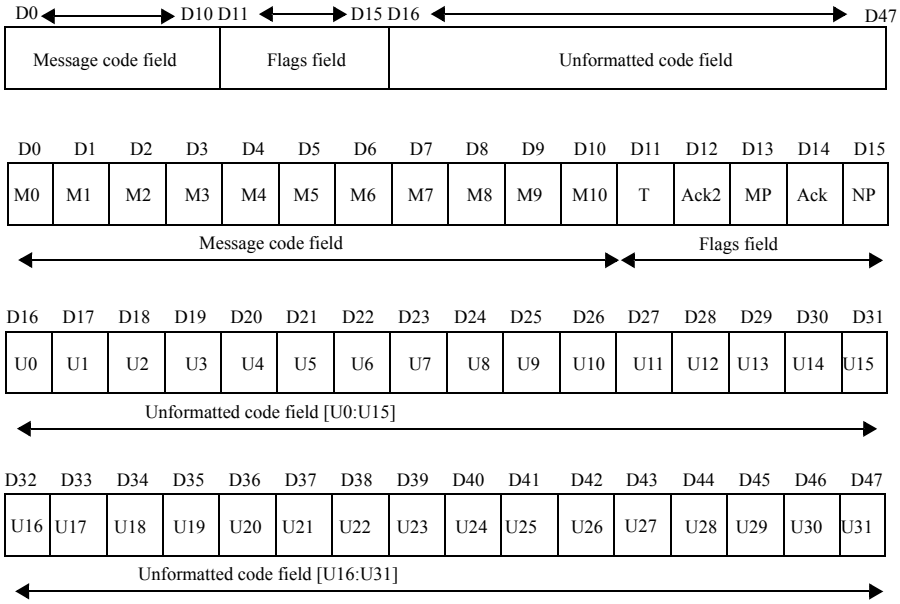

Figure 28–13—Extended Next Page Encoding

28.2.3.4.3 Next Page

Next Page (NP) is used by the Next Page function to indicate whether or not this is the last Next Page to be transmitted. NP shall be set as follows:

logic zero = last page.
logic one = additional Next Page(s) will follow.

28.2.3.4.4 Acknowledge

As defined in 28.2.1.2.5.

Copyright © 2005 IEEE. All rights reserved.
This is an unapproved IEEE Standards Draft, subject to change.

28.2.3.4.5 Message Page

Message Page (MP) is used by the Next Page function to differentiate a Message Page from an Unformatted Page. MP shall be set as follows:

logic zero = Unformatted Page.
logic one = Message Page.

28.2.3.4.6 Acknowledge 2

Acknowledge 2 (Ack2) is used by the Next Page function to indicate that a device has the ability to comply with the message. Ack2 shall be set as follows:

logic zero = cannot comply with message.
logic one = will comply with message.

28.2.3.4.7 Toggle

Toggle (T) is used by the Arbitration function to ensure synchronization with the Link Partner during Next Page exchange. This bit shall always take the opposite value of the Toggle bit in the previously exchanged Link Code Word. The initial value of the Toggle bit in the first Next Page transmitted is the inverse of bit 11 in the base Link Code Word and, therefore, may assume a value of logic one or zero. The Toggle bit shall be set as follows:

logic zero = previous value of the transmitted Link Code Word equalled logic one.
logic one = previous value of the transmitted Link Code Word equalled logic zero.

28.2.3.4.8 Message Page encoding

Message Pages are formatted pages that carry a single predefined Message Code, which is enumerated in Annex 28C. Two-thousand and forty-eight Message Codes are available. The allocation of these codes will be controlled by the contents of Annex 28C. If the Message Page bit is set to logic one, then the bit encoding of the Link Code Word shall be interpreted as a Message Page.

28.2.3.4.9 Message Code Field

Message Code Field (M[10:0]) is an eleven bit wide field, encoding 2048 possible messages. Message Code Field definitions are shown in Annex 28C. Combinations not specified are reserved for future use. Reserved combinations of the Message Code Field shall not be transmitted.

28.2.3.4.10 Unformatted Page encoding

Unformatted Pages carry the messages indicated by Message Pages. Five control bits are predefined, the remaining 11 bits may take on an arbitrary value. If the Message Page bit is set to logic zero, then the bit encoding of the Link Code Word shall be interpreted as an Unformatted Page.

28.2.3.4.11 Unformatted Code Field

Unformatted Code Field (U[10:0]) is an eleven bit wide field, which may contain an arbitrary value.

28.2.3.4.12 Use of Next Pages

a) Both devices must indicate Next Page ability for either to commence exchange of Next Pages.
b) If both devices are Next Page able, then both devices shall send at least one Next Page.

Copyright © 2005 IEEE. All rights reserved.
This is an unapproved IEEE Standards Draft, subject to change.

c) Next Page exchange shall continue until neither device on a link has more pages to transmit as indicated by the NP bit. A Message Page with a Null Message Code Field value shall be sent if the device has no other information to transmit.
d) A Message Code can carry either a specific message or information that defines how following Unformatted Page(s) should be interpreted.
e) If a Message Code references Unformatted Pages, the Unformatted Pages shall immediately follow the referencing Message Code in the order specified by the Message Code.
f) Unformatted Page users are responsible for controlling the format and sequencing for their Unformatted Pages.

28.2.3.4.13 MII register requirements

The Next Page Transmit register defined in 28.2.4.1.6 shall hold the Next Page to be sent by Auto-Negotiation. Received Next Pages may be stored in the Auto-Negotiation link partner ability register.

28.2.3.5 Remote fault sensing function

The Remote Fault function may indicate to the Link Partner that a fault condition has occurred using the Remote Fault bit and, optionally, the Next Page function.

Sensing of faults in a device as well as subsequent association of faults with the Remote Fault bit shall be optional. If the Local Device has no mechanism to detect a fault or associate a fault condition with the received Remote Fault bit indication, then it shall transmit the Remote Fault bit with the value contained in the Auto-Negotiation advertisement register bit (4.13).

A Local Device may indicate it has sensed a fault to its Link Partner by setting the Remote Fault bit in the Auto-Negotiation advertisement register and renegotiating.

If the Local Device sets the Remote Fault bit to logic one, it may also use the Next Page function to specify information about the fault that has occurred. Remote Fault Message Page Codes have been specified for this purpose.

The Remote Fault bit shall remain set until after successful negotiation with the base Link Code Word, at which time the Remote Fault bit shall be reset to a logic zero. On receipt of a base Link Code Word with the Remote Fault bit set to logic one, the device shall set the Remote Fault bit in the MII status register (1.4) to logic one if the MII management function is present.

28.2.4.1.8 State diagram variable to MII register mapping

The state diagrams of Figures 28–15 to 28–18 generate and accept variables of the form “mr_x,” where x is an individual signal name. These variables comprise a management interface that may be connected to the MII management function or other equivalent function. Table 28–8 describes how the MII registers map to the management function interface signals.

28.3 State diagrams and variable definitions

Change subclause 28.3 and Table 28-8 as follows

The notation used in the state diagrams (Figures 28–15 to 28–18) follows the conventions in 21.5. State diagram variables follow the conventions of 21.5.2 except when the variable has a default value. Variables in a state diagram with default values evaluate to the variable default in each state where the variable value is not

Copyright © 2005 IEEE. All rights reserved.

This is an unapproved IEEE Standards Draft, subject to change.

Table 28–8—State diagram variable to MII register mapping

State diagram variable	MII register	MDIO register
mr_adv_ability[16:1]	4.15:0 Auto-Negotiation advertisement register	7.19.15:0 AN LP Base page ability register
mr_autoneg_complete	1.5 Auto-Negotiation Complete	7.1.5 Auto-Negotiation Complete
mr_autoneg_enable	0.12 Auto-Negotiation Enable	7.0.12 Auto-Negotiation Enable
mr_lp_adv_ability[16:1]	For Base Page: 5.15:0 Auto-Negotiation link partner ability register For Next Page(s): If 6.6=1 and 6.5=1 then 8.15:0 is Auto-Negotiation Link Partner Received Next Page register If 6.6=1 and 6.5= 0 then 5.15:0 is Auto-Negotiation link partner ability register If 6.6=0 then 8.15:0 or 5.15:0 is Auto-Negotiation link partner Next Page ability register	
mr_lp_autoneg_able	6.0 Link Partner Auto-Negotiation Able	
mr_lp_np_able	6.3 Link Partner Next Page Able	
mr_main_reset	0.15 Reset	7.0.15 Reset
mr_next_page_loaded	Set on write to Auto-Negotiation Next Page Transmit register; cleared by Arbitration state diagram	
mr_np_able	6.2 Next Page Able	
mr_np_tx[16:1]	7.15:0 Auto-Negotiation Next Page Transmit Register	
mr_page_rx	6.1 Page Received	7.1.6 Page Received
mr_parallel_detection_fault	6.4 Parallel Detection Fault	
mr_restart_negotiation	0.9 Auto-Negotiation Restart	7.0.9 Auto-Negotiation Restart
set if Auto-Negotiation is available	1.3 Auto-Negotiation Ability	7.1.3 Auto-Negotiation Ability

explicitly set. Variables using the “mr_x” notation do not have state diagram defaults; however, their appropriate initialization conditions when mapped to the MII interface are covered in 28.2.4 and 22.2.4, and Clause 45 MDIO management interface. The variables, timers, and counters used in the state diagrams are defined in 28.3, 14.2.3, and 28.2.6.

Auto-Negotiation shall implement the Transmit state diagram, Receive state diagram, Arbitration state diagram, and NLP Receive Link Integrity Test state diagram as depicted in 28.3. Additional requirements to these state diagrams are made in the respective functional requirements sections. Options to these state diagrams clearly stated as such in the functional requirements sections or state diagrams shall be allowed. In the case of any ambiguity between stated requirements and the state diagrams, the state diagrams shall take precedence.

The functional reference diagram (Figure 28–14) provides a generic example, illustrated with initial PMA implementations and showing the mechanism for expansion. New PMAs are documented in Annex 28D.

Copyright © 2005 IEEE. All rights reserved.
This is an unapproved IEEE Standards Draft, subject to change.

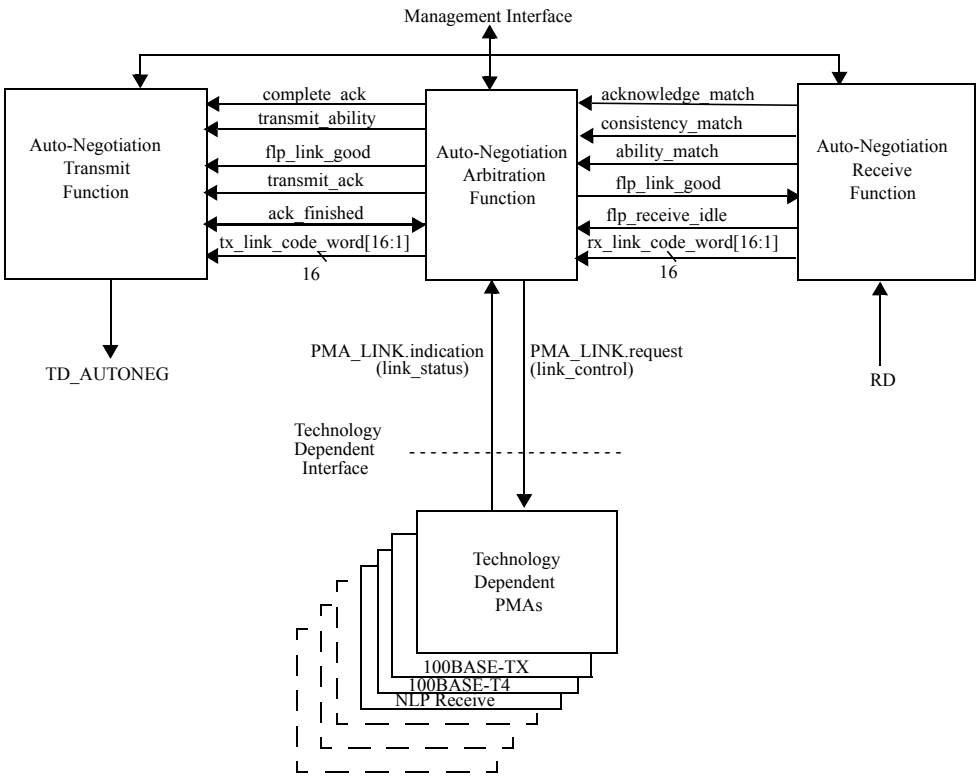

Figure 28–14—Functional reference diagram

28.3.1 State diagram variables

Insert the 10GigT and page_size variables to subclause 28.3.1, and modify Table 28-9 as shown.

A variable with "_[x]" appended to the end of the variable name indicates a variable or set of variables as defined by "x". "x" may be as follows:

all;	represents all specific technology-dependent PMAs supported in the Local Device and the NLP Receive Link Integrity Test state diagram.
10GigT;	represents that the 10GBASE-T PMA is the signal source.
1GigT;	represents that the 1000BASE-T PMA is the signal source.
HCD;	represents the single technology-dependent PMA chosen by Auto-Negotiation as the highest common denominator technology through the Priority Resolution or Parallel Detection function. To select 10BASE-T, LIT is used instead of NLP to enable the full 10BASE-T Link Integrity Test function state diagram.
notHCD;	represents all technology-dependent PMAs not chosen by Auto-Negotiation as the highest common denominator technology through the Priority Resolution or Parallel Detection function.
TX;	represents that the 100BASE-TX PMA is the signal source.
T4;	represents that the 100BASE-T4 PMA is the signal source.
NLP;	represents that the NLP Receive Link Integrity Test function is the signal source.
PD;	represents all of the following that are present: 100BASE-TX PMA, 100BASE-T4 PMA, and the NLP Receive Link Integrity Test state diagram.
LIT;	represents the 10BASE-T Link Integrity Test function state diagram is the signal source or

Copyright © 2005 IEEE. All rights reserved.
This is an unapproved IEEE Standards Draft, subject to change.

destination.

Variables with [16:1] appended to the end of the variable name indicate arrays that can be directly mapped to 16-bit registers. For these variables, “[x]” indexes an element or set of elements in the array, where “[x]” may be as follows:

— Any integer.
— Any variable that takes on integer values.
— NP; represents the index of the Next Page bit.
— ACK; represents the index of the Acknowledge bit.
— RF; represents the index of the Remote Fault bit.

Variables of the form “mr_x”, where x is a label, comprise a management interface that is intended to be connected to the MII Management function. However, an implementation-specific management interface may provide the control and status function of these bits.

ability_match

Indicates that three consecutive Link Code Words match, ignoring the Acknowledge bit. Three consecutive words are any three words received one after the other, regardless of whether the word has already been used in a word-match comparison or not.

Values: false; three matching consecutive Link Code Words have not been received, ignoring the Acknowledge bit (default).
true; three matching consecutive Link Code Words have been received, ignoring the Acknowledge bit.

NOTE—This variable is set by this variable definition; it is not set explicitly in the state diagrams.

Copyright © 2005 IEEE. All rights reserved.
This is an unapproved IEEE Standards Draft, subject to change.

ability_match_word [16:1]

A 16-bit array that contains the last Link Code Word that caused ability_match = true. For each element in the array:

Values: zero; data bit is logicial zero.
one; data bit is logical one.

ack_finished

Status indicating that the final remaining_ack_cnt Link Code Words with the Ack bit set have been transmitted.

Values: false; more Link Code Words with the Ack bit set to logic one must be transmitted.
true; all remaining Link Code Words with the Ack bit set to logic one have been transmitted.

acknowledge_match

Indicates that three consecutive Link Code Words match and have the Acknowledge bit set. Three consecutive words are any three words received one after the other, regardless of whether the word has already been used in a word match comparison or not.

Values: false; three matching and consecutive Link Code Words have not been received with the Acknowledge bit set (default).
true; three matching and consecutive Link Code Words have been received with the Acknowledge bit set.

NOTE—This variable is set by this variable definition; it is not set explicitly in the state diagrams.

base_page

Status indicating that the page currently being transmitted by Auto-Negotiation is the initial Link Code Word encoding used to communicate the device's abilities.

Values: false; a page other than base Link Code Word is being transmitted.
true; the base Link Code Word is being transmitted.

complete_ack

Controls the counting of transmitted Link Code Words that have their Acknowledge bit set.

Values: false; transmitted Link Code Words with the Acknowledge bit set are not counted (default).
true; transmitted Link Code Words with the Acknowledge bit set are counted.

consistency_match

Indicates that the Link Code Word that caused ability_match to be set is the same as the Link Code Word that caused acknowledge_match to be set.

Values: false; the Link Code Word that caused ability_match to be set is not the same as the Link Code Word that caused acknowledge_match to be set, ignoring the Acknowledge bit value.
true; the Link Code Word that caused ability_match to be set is the same as the Link Code Word that caused acknowledge_match to be set, independent of the Acknowledge bit value.

NOTE—This variable is set by this variable definition; it is not set explicitly in the state diagrams.

desire_np

Status indicating that the Local Device desires to engage in Next Page exchange. This information comes from the setting of the NP bit in the base Link Code Word stored in the Auto-Negotiation

Copyright © 2005 IEEE. All rights reserved.
This is an unapproved IEEE Standards Draft, subject to change.

advertisement register (Register 4).

Values: false; Next Page exchange is not desired.
true; Next Page exchange is desired.

flp_link_good

Indicates that Auto-Negotiation has completed.

Values: false; negotiation is in progress (default).
true; negotiation is complete, forcing the Transmit and Receive functions to IDLE.

flp_receive_idle

Indicates that the Receive state diagram is in the IDLE, LINK PULSE DETECT, or LINK PULSE COUNT state.

Values: false; the Receive state diagram is not in the IDLE, LINK PULSE DETECT, or LINK PULSE COUNT state (default).
true; the Receive state diagram is in the IDLE, LINK PULSE DETECT, or LINK PULSE COUNT state.

incompatible_link

Parameter used following Priority Resolution to indicate the resolved link is incompatible with the Local Device settings. A device's ability to set this variable to true is optional.

Values: false; A compatible link exists between the Local Device and Link Partner (default).
true; Optional indication that Priority Resolution has determined no highest common denominator exists following the most recent negotiation.

NOTE—This variable is set by this variable definition; it is not set explicitly in the state diagrams.

link_control

This variable is defined in 28.2.6.2.1.

link_status

This variable is defined in 28.2.6.1.1.

linkpulse

This variable is defined in 28.2.6.3.1.

Values: false; linkpulse is set to false after any Receive State Diagram state transition (default).
true; linkpulse is set to true when a valid Link Pulse is received.

mr_autoneg_complete

Status indicating whether Auto-Negotiation has completed or not.

Values: false; Auto-Negotiation has not completed.
true; Auto-Negotiation has completed.

mr_autoneg_enable

Controls the enabling and disabling of the Auto-Negotiation function.

Values: false; Auto-Negotiation is disabled.
true; Auto-Negotiation is enabled.

mr_adv_ability[16:1]

A 16-bit array that contains the Advertised Abilities Link Code Word.
For each element within the array:

Values: zero; data bit is logical zero.
one; data bit is logical one.

Copyright © 2005 IEEE. All rights reserved.
This is an unapproved IEEE Standards Draft, subject to change.

mr_lp_adv_ability[16:1]

A 16-bit array that contains the Link Partner's Advertised Abilities Link Code Word.
For each element within the array:

Values: zero; data bit is logical zero.
one; data bit is logical one.

mr_lp_np_able

Status indicating whether the Link Partner supports Next Page exchange.

Values: false; the Link Partner does not support Next Page exchange.
true; the Link Partner supports Next Page exchange.

mr_np_able

Status indicating whether the Local Device supports Next Page exchange.

Values: false; the Local Device does not support Next Page exchange.
true; the Local Device supports Next Page exchange.

mr_lp_autoneg_able

Status indicating whether the Link Partner supports Auto-Negotiation.

Values: false; the Link Partner does not support Auto-Negotiation.
true; the Link Partner supports Auto-Negotiation.

mr_main_reset

Controls the resetting of the Auto-Negotiation state diagrams.

Values: false; do not reset the Auto-Negotiation state diagrams.
true; reset the Auto-Negotiation state diagrams.

mr_next_page_loaded

Status indicating whether a new page has been loaded into the Auto-Negotiation Next Page Transmit register (Register 7).

Values: false; a New Page has not been loaded.
true; a New Page has been loaded.

mr_np_tx[16:1]

A 16-bit array that contains the new Next Page to transmit.
For each element within the array:

Values: zero; data bit is logical zero.
one; data bit is logical one.

mr_page_rx

Status indicating whether a New Page has been received. A New Page has been successfully received when acknowledge_match=true and consistency_match=true and the Link Code Word has been written to mr_lp_adv_ability[16:1].

Values: false; a New Page has not been received.
true; a New Page has been received.

mr_parallel_detection_fault

Error condition indicating that while performing Parallel Detection, either flp_receive_idle = false, or zero or more than one of the following indications were present when the autoneg_wait_timer expired. This signal is cleared on read of the Auto-Negotiaion expansion register.

1) link_status_ [NLP] = READY

Copyright © 2005 IEEE. All rights reserved.
This is an unapproved IEEE Standards Draft, subject to change.

2) link_status_[TX] = READY
3) link_status_[T4] = READY

Values: false; Exactly one of the above three indications was true when the autoneg_wait_timer expired, and flp_receive_idle = true.
true; either zero or more than one of the above three indications was true when the autoneg_wait_timer expired, or flp_receive_idle = false.

mr_restart_negotiation

Controls the entrance to the TRANSMIT DISABLE state to break the link before Auto-Negotiation is allowed to renegotiate via management control.

Values: false; renegotiation is not taking place.
true; renegotiation is started.

np_rx

Flag to hold the value of rx_link_code_word[NP] upon entry to the COMPLETE ACKNOWLEDGE state. This value is associated with the value of rx_link_code_word[NP] when acknowledge_match was last set.

Values zero; local device np_rx bit equals a logical zero.
one; local device np_rx bit equals a logical one.

page_size

Condition indicating the size of Next Page that the device is prepared to transmit and receive.

Values: 16; the device does not support extended Next Pages or extended Next Page ability has not been enabled (default).
48; extended Next Page ability has been enabled.

power_on

Condition that is true until such time as the power supply for the device that contains the Auto-Negotiation state diagrams has reached the operating region or the device has low power mode set via MII control register bit 0.11.

Values: false; the device is completely powered (default).
true; the device has not been completely powered.

rx_link_code_word[16:1]

A 16-bit array that contains the data bits to be received from an FLP Burst.
For each element within the array:

Values: zero; data bit is a logical zero.
one; data bit is a logical one.

single_link_ready

Status indicating that flp_receive_idle = true and only one the of the following indications is being received:

1) link_status_[NLP] = READY
2) link_status_[TX] = READY
3) link_status_[T4] = READY

Values: false; either zero or more than one of the above three indications are true or flp_receive_idle = false.
true; Exactly one of the above three indications is true and flp_receive_idle = true.

Copyright © 2005 IEEE. All rights reserved.
This is an unapproved IEEE Standards Draft, subject to change.

NOTE—This variable is set by this variable definition; it is not set explicitly in the state diagrams.

TD_AUTONEG

Controls the signal sent by Auto-Negotiation on the TD_AUTONEG circuit.

Values: idle; Auto-Negotiation prevents transmission of all link pulses on the MDI.
link_test_pulse; Auto-Negotiation causes a single link pulse as defined by Figure 14–12 to be transmitted on the MDI.

toggle_rx

Flag to keep track of the state of the Link Partner's Toggle bit.

Values: 0; Link Partner's Toggle bit equals logic zero.
1; Link Partner's Toggle bit equals logic one.

toggle_tx

Flag to keep track of the state of the Local Device's Toggle bit.

Values: 0; Local Device's Toggle bit equals logic zero.
1; Local Device's Toggle bit equals logic one.

transmit_ability

Controls the transmission of the Link Code Word containing tx_link_code_word[16:1].

Values: false; any transmission of tx_link_code_word[16:1] is halted (default).
true; the transmit state diagram begins sending tx_link_code_word[16:1].

transmit_ack

Controls the setting of the Acknowledge bit in the tx_link_code_word[16:1] to be transmitted.

Values: false; sets the Acknowledge bit in the transmitted tx_link_code_word[16:1] to a logic zero (default).
true; sets the Acknowledge bit in the transmitted tx_link_code_word[16:1] to a logic one.

transmit_disable

Controls the transmission of tx_link_code_word[16:1].

Values: false; tx_link_code_word[16:1] transmission is allowed (default).
true; tx_link_code_word[16:1] transmission is halted.

tx_link_code_word[16:1]

A 16-bit array that contains the data bits to be transmitted in an FLP Burst. This array may be loaded from mr_adv_ability or mr_np_tx.
For each element within the array:

Values: Zero; data bit is logical zero.
One; data bit is logical one.

28.3.2 State diagram timers

Change nlp_test_min_timer as follows

All timers operate in the manner described in 14.2.3.2.

autoneg_wait_timer

Timer for the amount of time to wait before evaluating the number of link integrity test functions with link_status=READY asserted. The autoneg_wait_timer shall expire 500–1000 ms from the

Copyright © 2005 IEEE. All rights reserved.
This is an unapproved IEEE Standards Draft, subject to change.

assertion of link_status=READY from the 100BASE-TX PMA, 100BASE-T4 PMA, or the NLP Receive State diagram.

break_link_timer
Timer for the amount of time to wait in order to assure that the Link Partner enters a Link Fail state. The timer shall expire 1200–1500 ms after being started.

data_detect_max_timer
Timer for the maximum time between a clock pulse and the next link pulse. This timer is used in conjunction with the data_detect_min_timer to detect whether the data bit between two clock pulses is a logic zero or a logic one. The data_detect_max_timer shall expire 78–100 µs from the last clock pulse.

data_detect_min_timer
Timer for the minimum time between a clock pulse and the next link pulse. This timer is used in conjunction with the data_detect_max_timer to detect whether the data bit between two clock pulses is a logic zero or a logic one. The data_detect_min_timer shall expire 15–47 µs from the last clock pulse.

flp_test_max_timer
Timer for the maximum time between two link pulses within an FLP Burst. This timer is used in conjunction with the flp_test_min_timer to detect whether the Link Partner is transmitting FLP Bursts. The flp_test_max_timer shall expire 165–185 µs from the last link pulse.

flp_test_min_timer
Timer for the minimum time between two link pulses within an FLP Burst. This timer is used in conjunction with the flp_test_max_timer to detect whether the Link Partner is transmitting FLP Bursts. The flp_test_min_timer shall expire 5–25 µs from the last link pulse.

interval_timer
Timer for the separation of a transmitted clock pulse from a data bit. The interval_timer shall expire 55.5–-69.5 µs from each clock pulse and data bit.

link_fail_inhibit_timer
Timer for qualifying a link_status=FAIL indication or a link_status=READY indication when a specific technology link is first being established. A link will only be considered “failed” if the link_fail_inhibit_timer has expired and the link has still not gone into the link_status=OK state. The link_fail_inhibit_timer shall expire 750–1000 ms after entering the FLP LINK GOOD CHECK state.

NOTE—The link_fail_inhibit_timer expiration value must be greater than the time required for the Link Partner to complete Auto-Negotiation after the Local Device has completed Auto-Negotiation plus the time required for the specific technology to enter the link_status=OK state. The maximum time difference between a Local Device and its Link Partner completing Auto-Negotiation is

(Maximum FLP Burst to FLP Burst separation) × (Maximum number of FLP Bursts needed to complete acknowledgment) = (24 ms) × (8 bursts) = 192 ms.

For example, 100BASE-T4 requires approximately 460 ms to enter link_status=OK for a total minimum link_fail_inhibit_timer time of 652 ms. The lower bound for the link_fail_inhibit_timer was chosen to provide adequate margin for the current technologies and any future PMAs.

nlp_test_max_timer
Timer for the maximum time that no FLP Burst may be seen before forcing the receive state diagram to the IDLE state. The nlp_test_max_timer shall expire 50–150 ms after being started or restarted.

nlp_test_min_timer
Timer for the minimum time between two consecutive FLP Bursts. The nlp_test_min_timer shall expire 5–7 ms after being started or restarted~~.~~ for devices that do not support extended Next Pages,

Copyright © 2005 IEEE. All rights reserved.
This is an unapproved IEEE Standards Draft, subject to change.

and shall expire 6.75–7.25 ms after being started or restarted for devices that do support extended Next Pages.

transmit_link_burst_timer

Timer for the separation of a transmitted FLP Burst from the next FLP Burst. The transmit_link_burst_timer shall expire 5.7-22.3 ms after the last transmitted link pulse in an FLP Burst.

Table 28–9—Timer min./max. value summary

Parameter	Min.	Typ.	Max.	Units
autoneg_wait_timer	500		1000	ms
break_link_timer	1200		1500	ms
data_detect_min_timer	15		47	µs
data_detect_max_timer	78		100	µs
flp_test_min_timer	5		25	µs
flp_test_max_timer	165		185	µs
interval_timer	55.5	62.5	69.5	µs
link_fail_inhibit_timer	750		1000	ms
nlp_test_max_timer	50		150	ms
nlp_test_min_timer (no support of extended Next Pages)	5		7	ms
nlp_test_min_timer (support of extended Next Pages)	6.75		7.25	ms
transmit_link_burst_timer	5.7	14	22.3	ms

Copyright © 2005 IEEE. All rights reserved.
This is an unapproved IEEE Standards Draft, subject to change.

28.3.3 State diagram counters

Chage rx_bit_cnt and tx_bit_cnt as follows:

flp_cnt

A counter that may take on integer values from 0 to 17. This counter is used to keep a count of the number of FLPs detected to enable the determination of whether the Link Partner supports Auto-Negotiation.

Values: not_done; 0 to 5 inclusive.
done; 6 to 17 inclusive.
init; counter is reset to zero.

remaining_ack_cnt

A counter that may take on integer values from 0 to 8. The number of additional Link Code Words with the Acknowledge Bit set to logic one to be sent to ensure that the Link Partner receives the acknowledgment.

Values: not_done; positive integers between 0 and 5 inclusive.
done; positive integers 6 to 8 inclusive (default).
init; counter is reset to zero.

rx_bit_cnt

A counter that may take on integer values from 0 to ~~17~~ (page_size+1). This counter is used to keep a count of data bits received from an FLP Burst and to ensure that when erroneous extra pulses are received, the first ~~16~~ page_size bits are kept while the rest are ignored. When this variable reaches ~~16 or 17~~ page_size or (page_size+1), enough data bits have been received. This counter does not increment beyond ~~17~~ (page_size+1) and does not return to 0 until it is reinitialized.

Values: not_done; 1 to ~~15~~ (page_size-1) inclusive.
done; ~~16 or 17~~ page_size or (page_size+1)
init; counter is reset to zero.
rx_bit_cnt_check; 10 to 17 inclusive.

tx_bit_cnt

A counter that may take on integer values from 1 to ~~17~~ (page_size+1). This counter is used to keep a count of data bits sent within an FLP Burst. When this variable reaches ~~17~~ (page_size+1), all data bits have been sent.

Values: not_done; 1 to ~~16~~ page_size inclusive.
done; ~~17~~ (page_size+1).
init; counter is initialized to 1.

Copyright © 2005 IEEE. All rights reserved.
This is an unapproved IEEE Standards Draft, subject to change.

28.3.4 State diagrams

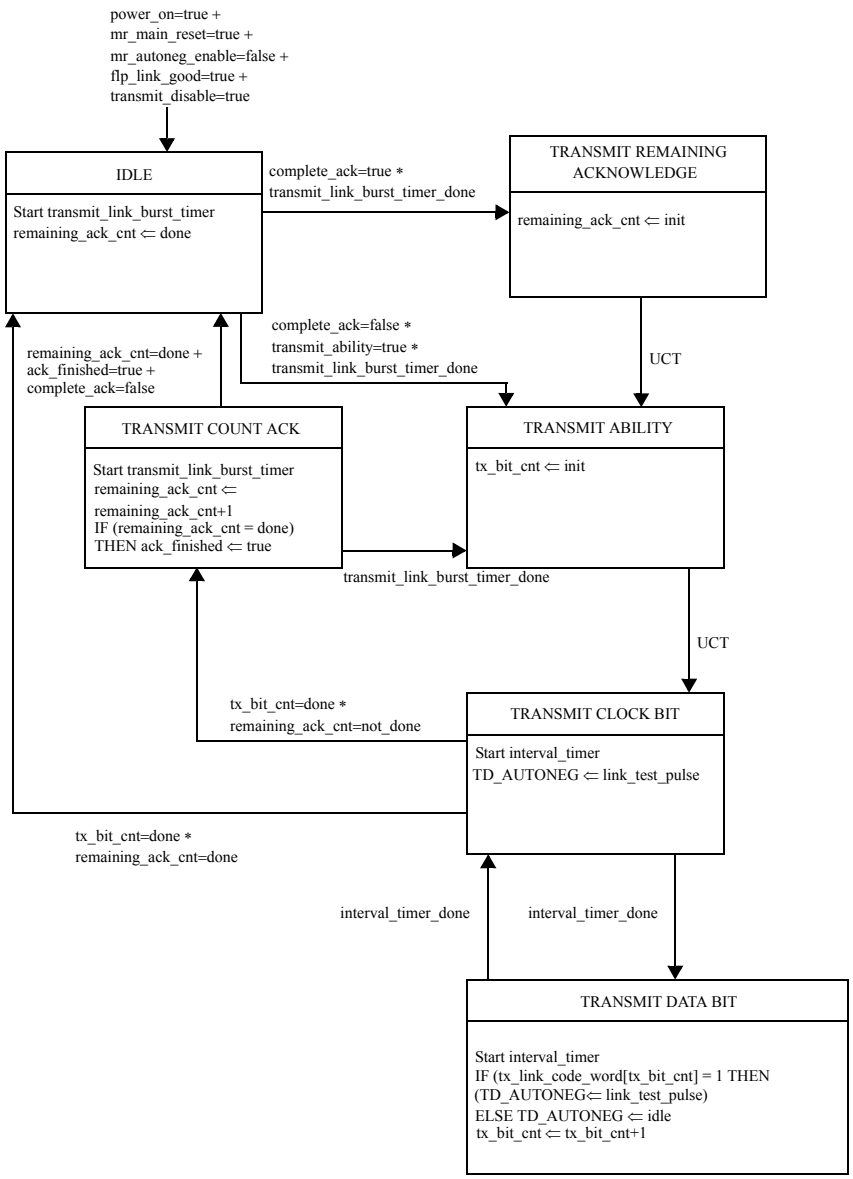

Figure 28–15—Transmit state diagram

Copyright © 2005 IEEE. All rights reserved.
This is an unapproved IEEE Standards Draft, subject to change.

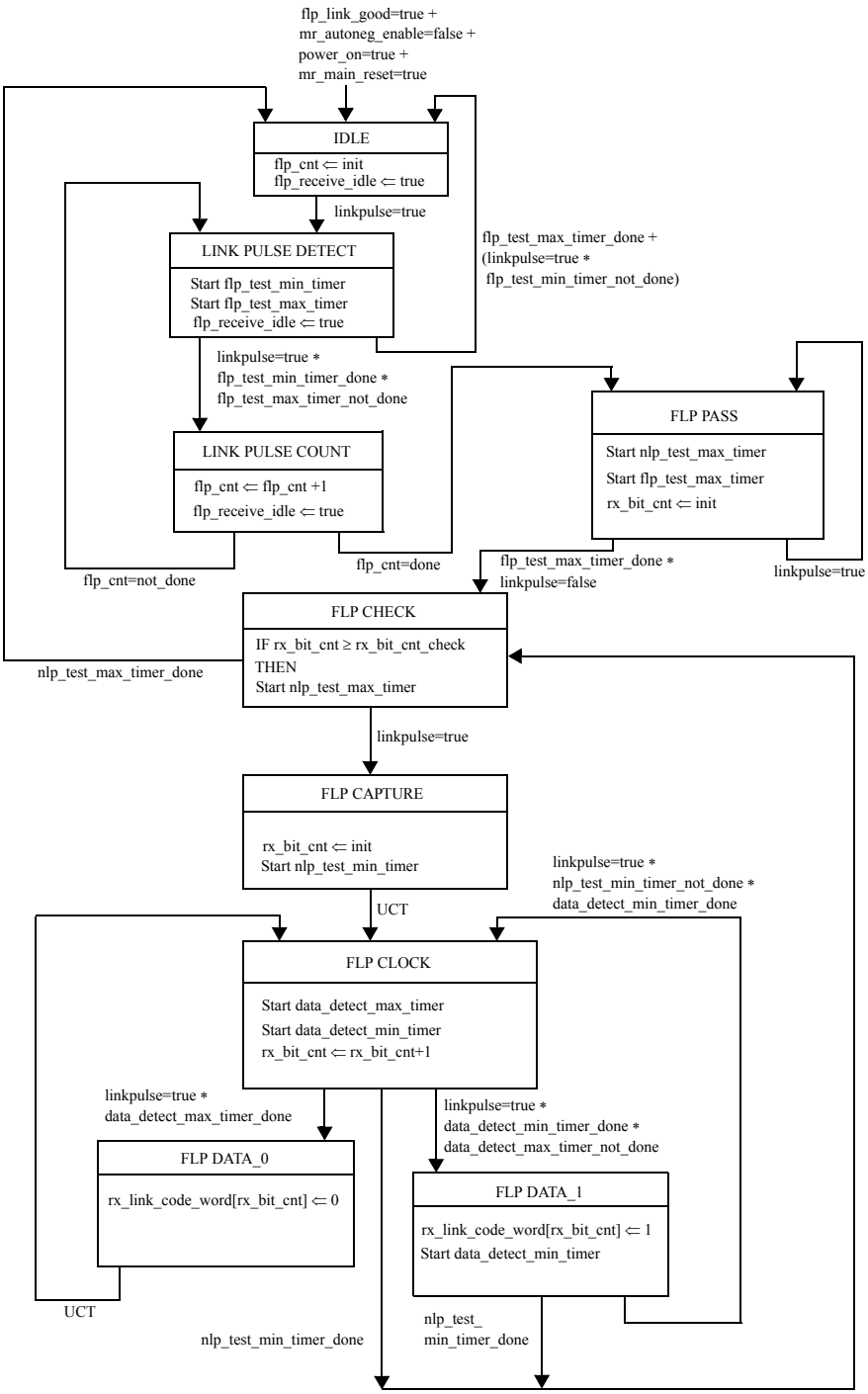

Figure 28–16—Receive state diagram

Copyright © 2005 IEEE. All rights reserved.
This is an unapproved IEEE Standards Draft, subject to change.

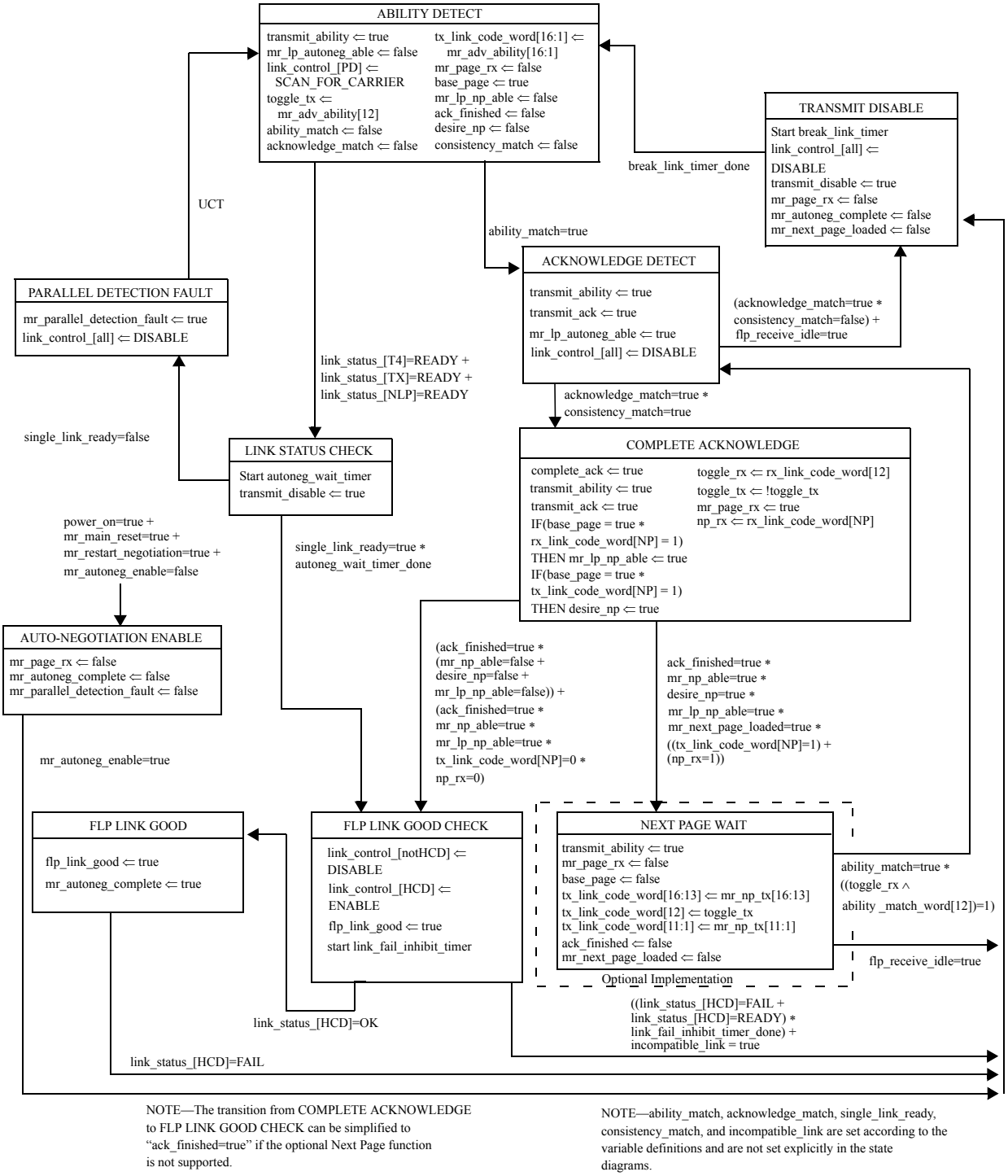

Figure 28–17—Arbitration state diagram

Copyright © 2005 IEEE. All rights reserved.
This is an unapproved IEEE Standards Draft, subject to change.

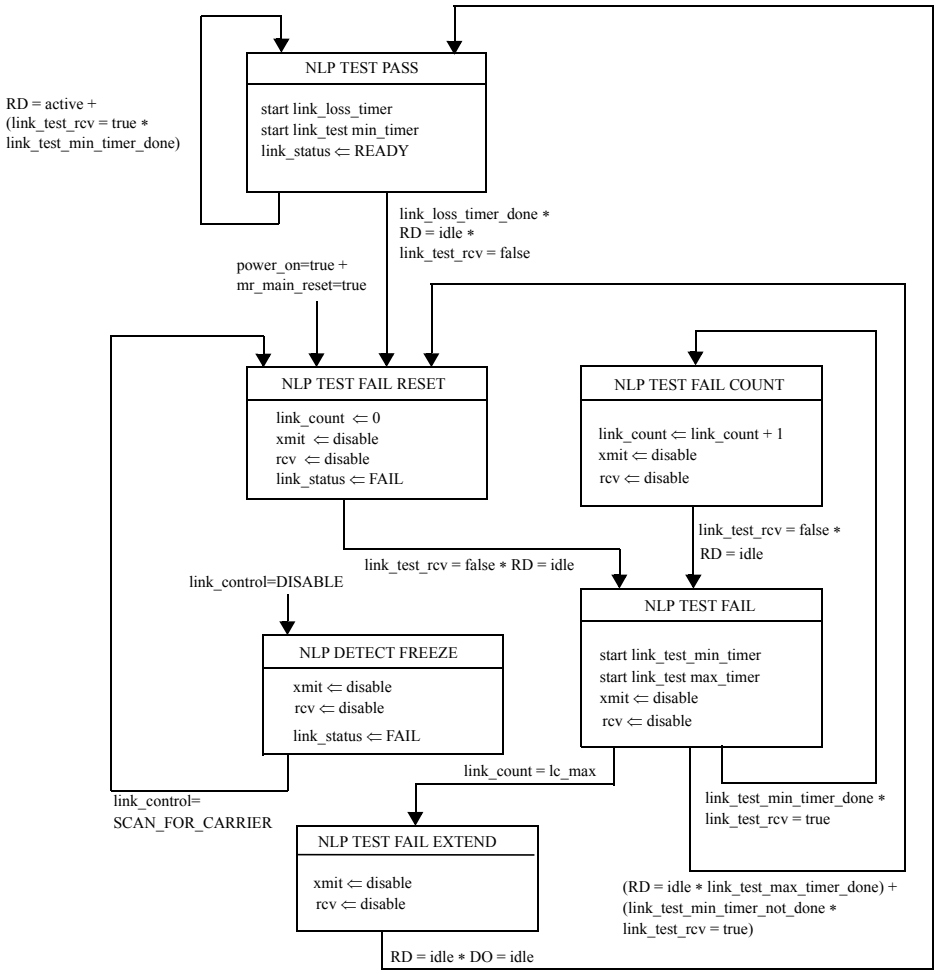

NOTE—The variables link_control and link_status are viewed as dedicated signals by the NLP Receive Link integrity Test state diagram, but are viewed as link_control_[NLP] and link_status_[NLP] by the Auto-Negotiation Arbitration state diagram, Figure 28–17.

Figure 28–18—NLP Receive Link Integrity Test state diagram

28.5 Protocol Implementation Conformance Statement (PICS) proforma for Clause 28, Physical Layer link signaling for 10 Mb/s, 100 Mb/s, ~~and~~ 1000 Mb/s, and 10Gb/s Auto-Negotiation on twisted pair[1]

Change title of subclause 28.5 to include 10Gb/s

28.5.1 Introduction

Change subclauses 28.5.1 and 28.5.2.2 to include 10Gb/s, and 28.5.2.2 to update the year and standard name

[1]*Copyright release for PICS proformas:* Users of this standard may freely reproduce the PICS proforma in this subclause so that it can be used for its intended purpose and may further publish the completed PICS.

Copyright © 2005 IEEE. All rights reserved.
This is an unapproved IEEE Standards Draft, subject to change.

The supplier of a protocol implementation that is claimed to conform to Clause 28, Physical Layer link signaling for 10 Mb/s, 100 Mb/s, ~~and~~ 1000 Mb/s, and 10Gb/s Auto-Negotiation on twisted pair, shall complete the following Protocol Implementation Conformance Statement (PICS) proforma.

A detailed description of the symbols used in the PICS proforma, along with instructions for completing the PICS proforma, can be found in Clause 21.

28.5.2 Identification

28.5.2.1 Implementation identification

Supplier	
Contact point for enquiries about the PICS	
Implementation Name(s) and Version(s)	
Other information necessary for full identification—e.g., name(s) and version(s) for machines and/or operating systems; System Names(s)	
NOTE 1—Only the first three items are required for all implementations; other information may be completed as appropriate in meeting the requirements for the identification. NOTE 2—The terms Name and Version should be interpreted appropriately to correspond with a supplier's terminology (e.g., Type, Series, Model).	

28.5.2.2 Protocol summary

Identification of protocol standard	IEEE Std ~~802.3-2002~~ 802.3an-200X, Clause 28, Physical Layer link signaling for 10 Mb/s, 100 Mb/s, ~~and~~ 1000 Mb/s, and 10Gb/s Auto-Negotiation on twisted pair
Identification of amendments and corrigenda to this PICS proforma that have been completed as part of this PICS	
Have any Exception items been required?No [ ] Yes [ ] (See Clause 21; the answer Yes means that the implementation does not conform to IEEE Std ~~802.3-2002~~ 802.3an-200X.)	

Date of Statement	

Copyright © 2005 IEEE. All rights reserved.
This is an unapproved IEEE Standards Draft, subject to change.

28.5.3 Major capabilities/options

Change subclause 28.5.3 as follows

Item	Feature	Subclause	Status	Support	Value/comment
10BT	Implementation supports a 10BASE-T data service	28.1.2	O		N/A
*NP	Implementation supports Next Page function	28.1.2	O		N/A
*MII	Implementation supports the MII Management Interface	28.1.2	O/1		N/A
MGMT	Implementation supports a non-MII Management Interface	28.1.2	O/1		N/A
*NOM	Implementation does not support management	28.1.2	O/1		N/A
*RF	Implementation supports Remote Fault Sensing	28.2.3.5	O		N/A
*NPSL	Link Partner Next Page Storage Location bit	28.2.4.1.5	O		N/A
*ENP	Implementation supports Extended Next Pages	28.2.3.4.2	O		N/A
*OPT	Implementation supports optimized FLP burst to FLP burst timing	28.2.1.1.2	O		N/A

28.5.4 PICS proforma tables for Physical Layer link signaling for 10 Mb/s, 100 Mb/s, ~~and~~ 1000 Mb/s, and 10Gb/s Auto-Negotiation on twisted pair

Change title of subclause 28.5.4 to include 10Gb/s

Copyright © 2005 IEEE. All rights reserved.
This is an unapproved IEEE Standards Draft, subject to change.

28.5.4.1 Scope

Item	Feature	Subclause	Status	Support	Value/comment
1	MII Management Interface control and status registers	28.1.3	MII:M		Implemented in accordance with the definitions in Clause 22 and 28.2.4
2	CSMA/CD compatible devices using an eight-pin modular connector and using a signaling method to automatically configure the preferred mode of operation	28.1.4	M		Auto-Negotiation function implemented in compliance with Clause 28
3	Device uses 10BASE-T compatible link signaling to advertise non-CSMA/CD abilities	28.1.4	M		Auto-Negotiation function implemented in compliance with Clause 28
4	Future CSMA/CD implementations that use an eight-pin modular connector	28.1.4	M		Interoperable with devices compliant with Clause 28

28.5.4.2 Auto-Negotiation functions

Item	Feature	Subclause	Status	Support	Value/comment
1	Transmit	28.2	M		Complies with Figure 28–15
2	Receive	28.2	M		Complies with Figure 28–16
3	Arbitration	28.2	M		Complies with Figure 28–17
4	NLP Receive Link Integrity Test	28.2	M		Complies with Figure 28–18
5	Technology-Dependent Interface	28.2	M		Complies with 28.2.6
6	Technology-dependent link integrity test	28.2	M		Implemented and interfaced to for those technologies supported by device
7	Management	28.2	O		MII based or alternate management

Copyright © 2005 IEEE. All rights reserved.
This is an unapproved IEEE Standards Draft, subject to change.

28.5.4.3 Transmit function requirements

Change subclause 28.5.4.3 as follows

Item	Feature	Subclause	Status	Support	Value/comment
1	FLP Burst transmission	28.2.1.1	M		Not transmitted once Auto-Negotiation is complete and highest common denominator PMA has been enabled. Prohibited other than for link start-up
2	FLP Burst composition	28.2.1.1.1	M		Pulses in FLP Bursts meet the requirements of Figure 14–12
3	FLP Burst pulse definition	28.2.1.1.1	M		~~17 o~~Odd-numbered pulse positions represent clock information; ~~16~~ even-numbered pulse positions represent data information
4	The first pulse in an FLP Burst	28.2.1.1.2	M		Defined as a clock pulse for timing purposes
5	FLP Burst clock pulse spacing	28.2.1.1.2	M		Within an FLP Burst, spacing is 125 ± 14 µs
6	Logic one data bit representation	28.2.1.1.2	M		Pulse transmitted 62.5 ± 7 µs after the preceding clock pulse
7	Logic zero data bit representation	28.2.1.1.2	M		No link integrity test pulses within 111 µs of the preceding clock pulse
8	Consecutive FLP Bursts	28.2.1.1.2	M		The first link pulse in each FLP Burst is separated by 16 ± 8 ms
9	Consecutive FLP Bursts	28.2.1.1.2	OPT:M		The first link pulse in each FLP Burst is separated by 8.25 ± 0.25 ms
~~9~~10	FLP Burst base page	28.2.1.2	M		Conforms to Figure 28–7
~~10~~11	FLP Burst bit transmission order	28.2.1.2	M		Transmission is D0 first to D15 last
~~11~~12	Selector Field values	28.2.1.2.1	M		Only defined values transmitted
~~12~~13	Technology Ability Field values	28.2.1.2.2	M		Implementation supports a data service for each ability set in the Technology Ability Field
~~13~~14	Remote Fault bit	28.2.1.2.4	M		Used in accordance with the Remote Fault function specifications
~~14~~15	Acknowledge bit set, no Next Page to be sent	28.2.1.2.5	M		Set to logic one in the Link Code Word after the reception of at least three consecutive and consistent FLP Bursts
16	Number of Link Code Words sent with Acknowledge bit set	28.2.1.2.5	M		6 to 8 inclusive after COMPLETE ACKNOWLEDGE state entered

Copyright © 2005 IEEE. All rights reserved.
This is an unapproved IEEE Standards Draft, subject to change.

28.5.4.3 Transmit function requirements

Change subclause 28.5.4.3 as follows *(continued)*

Item	Feature	Subclause	Status	Support	Value/comment
17	Device does not implement optional Next Page ability	28.2.1.2.6	M		NP=0 in base Link Code Word
18	Device implements optional Next Page ability and wishes to engage in Next Page exchange	28.2.1.2.6	NP:M		NP=1 in base Link Code Word
19	Transmit Switch function on completion of Auto-Negotiation	28.2.1.3	M		Enables the transmit path from a single technology-dependent PMA to the MDI once the highest common denominator has been selected
20	Transmit Switch function during Auto-Negotiation	28.2.1.3	M		Connects FLP Burst generator governed by Figure 28–15 to the MDI
21	Signals presented at MDI after connection through Transmit Switch from PMA	28.2.1.3	M		Conform to appropriate PHY specifications

28.5.4.4 Receive function requirements

Item	Feature	Subclause	Status	Support	Value/comment
1	Timer expiration	28.2.2.1	M		Timer definition in 28.3.2, values shown in Table 28–9
2	Identification of Link Partner as Auto-Negotiation able	28.2.2.1	M		Reception of 6 to 17 (inclusive) consecutive link pulses separated by at least flp_test_min_timer time but less than flp_test_max_timer time
3	First FLP Burst identifying Link Partner as Auto-Negotiation able	28.2.2.1	M		Data recovered is discarded if FLP Burst is incomplete
4	First link pulse in an FLP Burst	28.2.2.1	M		Interpreted as a clock link pulse
5	Restart of the data_detect_min_timer and data_detect_max_timer	28.2.2.1	M		Detection of a clock link pulse (Figure 28–9)
6	Reception of logic one	28.2.2.1	M		Link pulse received between greater than data_detect_min_timer time and less than data_detect_max_timer time after a clock pulse (Figure 28–9)

Copyright © 2005 IEEE. All rights reserved.
This is an unapproved IEEE Standards Draft, subject to change.

28.5.4.4 Receive function requirements *(continued)*

Item	Feature	Subclause	Status	Support	Value/comment
7	Reception of logic zero	28.2.2.1	M		Link pulse received after greater than data_detect_max_timer time after clock pulse, is treated as clock pulse (Figure 28–9)
8	FLP Bursts separation	28.2.2.1	M		Conforms to the nlp_test_min_timer and nlp_test_max_timer timing (Figure 28–10)
9	Receive Switch function on completion of Auto-Negotiation	28.2.2.3	M		Enables the receive path from the MDI to a single technology-dependent PMA once the highest common denominator has been selected
10	Receive Switch function during Auto-Negotiation	28.2.2.3	M		Connects the MDI to the FLP and NLP receivers governed by Figures 28–16 and 28–18, and to the 100BASE-TX and 100BASE-T4 receivers if present
11	Signals presented to PMA after connection through Receive Switch from MDI	28.2.2.3	M		Conform to appropriate PHY specifications
12	Generation of ability_match, acknowledge_match, and consistency_match	28.2.2.4	M		Responsibility of Receive function in accordance with 28.3.1

28.5.4.5 Arbitration functions

Item	Feature	Subclause	Status	Support	Value/comment
1	MDI receive connection during Auto-Negotiation, prior to FLP detection	28.2.3.1	M		Connected to the NLP Receive Link Integrity Test state diagram, and the link integrity test functions of 100BASE-TX and/or 100BASE-T4. Not connected to the 10BASE-T or any other PMA
2	Parallel detection operational mode selection	28.2.3.1	M		Set link_control=ENABLE for the single PMA indicating link_status=READY when the autoneg_wait_timer expires
3	Parallel detection PMA control	28.2.3.1	M		Set link_control=DISABLE to all PMAs except the selected operational PMA and indicate Auto-Negotiation has completed

Copyright © 2005 IEEE. All rights reserved.
This is an unapproved IEEE Standards Draft, subject to change.

28.5.4.5 Arbitration functions *(continued)*

Item	Feature	Subclause	Status	Support	Value/comment
4	Parallel detection setting of link partner ability register	28.2.3.1	M		On transition to the FLP LINK GOOD CHECK state from the LINK STATUS CHECK state the Parallel Detection function shall set the bit in the link partner ability register (Register 5) corresponding to the technology detected by the Parallel Detection function
5	Response to renegotiation request	28.2.3.2	M		Disable all technology-dependent link integrity test functions and halt transmit activity until break_link_timer expires
6	Auto-Negotiation resumption	28.2.3.2	M		Issue FLP Bursts with base page valid in tx_link_code_word[16:1] after break_link_timer expires
7	Priority resolution	28.2.3.3	M		Single PMA connected to MDI is enabled corresponding to Technology Ability Field bit common to both Local/Link Partner Device and that has highest priority as defined by Annex 28B
8	Effect of receipt of reserved Technology Ability Field bit on priority resolution	28.2.3.3	M		Local Device ignores during priority resolution
9	Effect of parallel detection on priority resolution	28.2.3.3	M		Local Device considers technology identified by parallel detection as HCD
10	Values for HCD and link_status_[HCD] in the event there is no common technology	28.2.3.3	M		HCD=NULL link_status_[HCD]=FAIL
11	Message Page to Unformatted Page relationship for non-matching Selector Fields	28.2.3.4	NP:M		Each series of Unformatted Pages is preceded by an Message Page containing a message code that defines how the following Unformatted Page(s) will be interpreted
12	Message Page to Unformatted Page relationship for matching Selector Fields	28.2.3.4	NP:M		Use of Message Pages is specified by the Selector Field value
13	Transmission of Null message codes	28.2.3.4	NP:M		Sent with NP=0 on completion of all Next Pages while Link Partner continues to transmit valid Next Page information
14	Reception of Null message codes	28.2.3.4	NP:M		Recognized as indicating end of Link Partner's Next Page information

Copyright © 2005 IEEE. All rights reserved.
This is an unapproved IEEE Standards Draft, subject to change.

28.5.4.5 Arbitration functions *(continued)*

Item	Feature	Subclause	Status	Support	Value/comment
15	Next Page encoding	28.2.3.4.1	NP:M		Comply with Figures 28–11 and 28–12 for the NP, Ack, MP, Ack2, and T bits
16	Message/Unformatted Code Field	28.2.3.4.1	NP:M		D10-D0 encoded as Message Code Field if MP=1 or Unformatted Code Field if MP=0
17	NP bit encoding	28.2.3.4.3	NP:M		Logic 0=last page, logic 1=additional Next Page(s) follow
18	Message Page bit encoding	28.2.3.4.5	NP:M		Logic 0=Unformatted Page, logic 1=Message Page
19	Ack2 bit encoding	28.2.3.4.6	NP:M		Logic 0=cannot comply with message; logic 1= will comply with message
20	Toggle	28.2.3.4.7	NP:M		Takes the opposite value of the Toggle bit in the previously exchanged Link Code Word
21	Toggle encoding	28.2.3.4.7	NP:M		Logic zero = previous value of the transmitted Link Code Word equalled logic one Logic one = previous value of the transmitted Link Code Word equalled logic zero
22	Message Page encoding	28.2.3.4.8	NP:M		If MP=1, Link Code Word interpreted as Message Page
23	Message Code Field	28.2.3.4.9	NP:M		Combinations not shown in Annex 28B are reserved and may not be transmitted
24	Unformatted Page encoding	28.2.3.4.10	NP:M		If MP=0, Link Code Word interpreted as Unformatted Page
25	Minimum Next Page exchange	28.2.3.4.12	NP:M		If both devices indicate Next Page able, both send a minimum of one Next Page
26	Multiple Next Page exchange	28.2.3.4.12	NP:M		If both devices indicate Next Page able, exchange continues until neither Local/Remote Device has additional information; device sends Next Page with Null Message Code if it has no information to transmit
27	Unformatted Page ordering	28.2.3.4.12	NP:M		Unformatted Pages immediately follow the referencing Message Code in the order specified by the Message Code
28	Next Page Transmit register	28.2.3.4.13	NP:M		Defined in 28.2.4.1.6

Copyright © 2005 IEEE. All rights reserved.
This is an unapproved IEEE Standards Draft, subject to change.

28.5.4.5 Arbitration functions *(continued)*

Item	Feature	Subclause	Status	Support	Value/comment
29	Next Page receive data	28.2.3.4.13	NP:O		May be stored in Auto-Negotiation link partner ability register
30	Remote Fault sensing	28.2.3.5	RF:M		Optional
31	Transmission of RF bit by Local Device	28.2.3.5	M		If Local Device has no method to set RF bit, it must transmit RF bit with value of RF bit in Auto-Negotiation advertisement register (4.13)
32	RF bit reset	28.2.3.5	M		Once set, the RF bit remains set until successful renegotiation with the base Link Code Word
33	Receipt of Remote Fault indication in Base Link Code Word	28.2.3.5	MII:M		Device sets the Remote Fault bit in the MII status register (1.4) to logic one if MII is present

28.5.4.6 Management function requirements

Item	Feature	Subclause	Status	Support	Value/comment
1	Mandatory MII registers for Auto-Negotiation	28.2.4.1	MII:M		Registers 0, 1, 4, 5, 6
2	Optional MII register for Auto-Negotiation	28.2.4.1	MII* NP:M		Register 7
3	Auto-Negotiation enable	28.2.4.1.1	MII:M		Set control register Auto-Negotiation Enable bit (0.12)
4	Manual Speed/Duplex settings	28.2.4.1.1	MII:M		When bit 0.12 set, control register Speed Detection (0.13) and Duplex Mode (0.8) are ignored, and the Auto-Negotiation function determines link configuration
5	Control register (Register 0) Restart Auto-Negotiation (0.9) default	28.2.4.1.1	MII:M		PHY returns value of one in 0.9 until Auto-Negotiation has been initiated
6	Control register (Register 0) Restart Auto-Negotiation (0.9) set	28.2.4.1.1	MII:M		When 0.9 set, Auto-Negotiation will (re)initiate. On completion, 0.9 will be reset by the PHY device. Writing a zero to 0.9 at any time has no effect
7	Control register (Register 0) Restart Auto-Negotiation (0.9) reset	28.2.4.1.1	MII:M		0.9 is self-clearing; writing a zero to 0.9 at any time has no effect
8	Status register (Register 1) Auto-Negotiation Complete (1.5) reset	28.2.4.1.2	MII:M		If bit 0.12 reset, or a PHY lacks the ability to perform Auto-Negotiation, (1.5) is reset

Copyright © 2005 IEEE. All rights reserved.
This is an unapproved IEEE Standards Draft, subject to change.

28.5.4.6 Management function requirements *(continued)*

Item	Feature	Subclause	Status	Support	Value/comment
9	Status register (Register 1) Remote Fault (1.4)	28.2.4.1.2	MII:M		Set by the PHY and remains set until either the status register is read or the PHY is reset
10	Advertisement register power on default	28.2.4.1.3	MII:M		Selector field as defined in Annex 28A; Ack=0; Technology Ability Field based on MII status register (1.15:11) or logical equivalent
11	Link partner ability register read/write	28.2.4.1.4	MII:M		Read only; write has no effect
12	Link partner ability register bit definitions	28.2.4.1.4	MII:M		Direct representation of the received Link Code Word (Figure 28–7)
13	Status register (Register 1) Auto-Negotiation Complete (1.5) set	28.2.4.1.4	MII:M		Set to logic one upon successful completion of Auto-Negotiation
14	Auto-Negotiation expansion register (Register 6)	28.2.4.1.5	MII:M		Read only; write has no effect
15	Link Partner Auto-Negotiation Able bit (6.0)	28.2.4.1.5	MII:M		Set to indicate that the Link Partner is able to participate in the Auto-Negotiation function
16	Page Received bit (6.1) set	28.2.4.1.5	MII:M		Set to indicate that a new Link Code Word has been received and stored in the Auto-Negotiation link partner ability register
17	Page Received bit (6.1) reset	28.2.4.1.5	MII:M		Reset on a read of the Auto-Negotiation expansion register (Register 6)
18	The Next Page Able bit (6.2) set	28.2.4.1.5	NP* MII:M		Set to indicate that the Local Device supports the Next Page function
19	The Link Partner Next Page Able bit (6.3) set	28.2.4.1.5	MII:M		Set to indicate that the Link Partner supports the Next Page function
20	Parallel Detection Fault bit (6.4) set	28.2.4.1.5	MII:M		Set to indicate that zero or more than one of the NLP Receive Link Integrity Test function, 100BASE-TX, or 100BASE-T4 PMAs have indicated link_status=READY when the autoneg_wait_timer expires
21	Parallel Detection Fault bit (6.4) reset	28.2.4.1.5	MII:M		Reset on a read of the Auto-Negotiation expansion register (Register 6)
21a	Link Partner Next Page Storage Location bit	28.2.4.1.5	NPSL * MII:M		Indicates location of Link Partner Next Page

Copyright © 2005 IEEE. All rights reserved.
This is an unapproved IEEE Standards Draft, subject to change.

28.5.4.6 Management function requirements *(continued)*

Item	Feature	Subclause	Status	Support	Value/comment
21b	Receive Next Page Location Able bit	28.2.4.1.5	MII:M		Indicates if Link Partner Next Page Storage Location bit is supported.
22	Next Page Transmit register default	28.2.4.1.6	NP* MII:M		On power-up, contains value of 2001 H
23	Write to Next Page Transmit register	28.2.4.1.6	NP* MII:M		mr_next_page_loaded set to true
24	Absence of management function	28.2.5	NOM:M		Advertised abilities provided through a logical equivalent of mr_adv_ability[16:1]
25	Next Page support in absence of MII management	28.2.5	NOM:M		Device must provide logical equivalent of mr_np_able, mr_lp_np_able, or mr_next_page_loaded variables in order to set NP bit in transmitted Link Code Word

28.5.4.7 Technology-dependent interface

Item	Feature	Subclause	Status	Support	Value/comment
1	PMA_LINK.indication(link_status) values	28.2.6.1.1	M		link_status set to READY, OK or FAIL
2	PMA_LINK.indication(link_status) generation	28.2.6.1.2	M		Technology-dependent PMA and NLP Receive Link Integrity Test state diagram (Figure 28–18) responsibility
3	PMA_LINK.indication(link_status), effect of receipt	28.2.6.1.3	M		Governed by the state diagram of Figure 28–17
4	PMA_LINK.request(link_control) values	28.2.6.1.3	M		link_control set to SCAN_FOR_CARRIER, DISABLE, or ENABLE
5	Effect of link_control=SCAN_FOR_CARRIER	28.2.6.2.1	M		PMA to search for carrier and report link_status=READY when carrier is received, but no other actions are enabled
6	Effect of link_control=DISABLE	28.2.6.2.1	M		Disables PMA processing
7	Effect of link_control=ENABLE	28.2.6.2.1	M		Control passed to a single PMA for normal processing functions
8	PMA_LINK.request(link_control) generation	28.2.6.2.2	M		Auto-Negotiation function responsibility in accordance with Figures 28–16 and 28–17

Copyright © 2005 IEEE. All rights reserved.
This is an unapproved IEEE Standards Draft, subject to change.

28.5.4.7 Technology-dependent interface *(continued)*

Item	Feature	Subclause	Status	Support	Value/comment
9	PMA_LINK.request(link_control) default upon power-on, reset, or release from power-down	28.2.6.2.2	M		link_control = DISABLE state to all technology-dependent PMAs
10	PMA_LINK.request(link_control) effect of receipt	28.2.6.2.3	M		Governed by Figure 28–18 and the receiving technology-dependent link integrity test function
11	The linkpulse parameter shall	28.2.6.3.1	M		TRUE or FALSE.
12	The linkpulse=FALSE shall be used	28.2.6.3.1	M		By the Auto-Negotiation function to indicate that the Receive State Diagram has performed a state transition.
13	The linkpulse=TRUE shall be used	28.2.6.3.1	M		By the Auto-Negotiation function to indicate that a valid Link Pulse has been received.
14	The Auto-Negotiation function shall generate linkpulse	28.2.6.3.2	M		To indicate to the PHY how to respond, in accordance with the state diagram of Figure 28–16.
15	Upon power-on or reset, if Auto-Negotiation is enabled (mr_autoneg_enable=true) the PMA_LINKPULSE.request(FALSE) message shall be	28.2.6.3.2	M		Issued to all technology-dependent PMAs.
16	The effect of the receipt of linkpulse shall be governed	28.2.6.3.3	M		By the receiving technology-dependent PMA function, based on the intent specified in the primitive semantics.

28.5.4.8 State diagrams

Change subclause 28.5.4.8 as follows

Item	Feature	Subclause	Status	Support	Value/comment
1	Adherence to state diagrams	28.3	M		Implement all features of Figures 28–15 to 28–18. Identified options to Figures 28–15 to 28–18 are permitted
3	Ambiguous requirements	28.3	M		State diagrams take precedence in defining functional operation
4	autoneg_wait_timer	28.3.1	M		Expires between 500–1000 ms after being started

Copyright © 2005 IEEE. All rights reserved.
This is an unapproved IEEE Standards Draft, subject to change.

28.5.4.8 State diagrams

Change subclause 28.5.4.8 as follows *(continued) (continued)*

Item	Feature	Subclause	Status	Support	Value/comment
5	break_link_timer	28.3.2	M		Expires between 1200–1500 ms after being started
6	data_detect_min_timer	28.3.2	M		Expires between 15–47 µs from the last clock pulse
7	data_detect_max_timer	28.3.2	M		Expire between 78–100 µs from the last clock pulse
8	flp_test_max_timer	28.3.2	M		Expires between 165–185 µs from the last link pulse
9	flp_test_min_timer	28.3.2	M		Expires between 5–25 µs from the last link pulse
10	interval_timer	28.3.2	M		Expires 55.5–69.5 µs from each clock pulse and data bit
11	link_fail_inhibit_timer	28.3.2	M		Expires 750–1000 ms after entering the FLP LINK GOOD CHECK state
12	nlp_test_max_timer	28.3.2	M		Expires between 50–150 ms after being started if not restarted
13	nlp_test_min_timer	28.3.2	M		Expires between 5–7 ms after being started if not restarted
14	nlp_test_min_timer	28.3.2	ENP:M		Expires between 6.75–7.25 ms after being started if not restarted
~~14~~15	transmit_link_burst_timer	28.3.1	M		Expires 5.7–22.3 ms after the last transmitted link pulse in an FLP Burst

Copyright © 2005 IEEE. All rights reserved.
This is an unapproved IEEE Standards Draft, subject to change.

28.5.4.9 Electrical characteristics

Item	Feature	Subclause	Status	Support	Value/comment
1	Pulses within FLP Bursts	28.4	M		Identical to the characteristics of NLPs and meet the requirements of Figure 14–12

28.5.4.10 Auto-Negotiation annexes

Item	Feature	Annex	Status	Support	Value/comment
1	Selector field, S[4:0] values in the Link Code Word	Annex 28A	M		Identifies base message type as defined by Table 28A–1
2	Selector field reserved combinations	Annex 28A	M		Transmission not permitted
3	Relative priorities of the technologies supported by the IEEE 802.3 Selector Field value	28B.3	M		Defined in Annex 28B.3
4	Relative order of the technologies supported by IEEE 802.3 Selector Field	28B.3	M		Remain unchanged
5	Addition of new technology	28B.3	M		Inserted into its appropriate place in the priority resolution hierarchy, shifting technologies of lesser priority lower in priority
6	Addition of vendor-specific technology	28B.3	M		Priority of IEEE 802.3 standard topologies maintained, vendor-specific technologies to be inserted into an appropriate location
7	Message Code Field	Annex 28C	NP:M		Defines how following Unformatted Pages (if applicable) are interpreted
8	Message Code Field reserved combinations	Annex 28C	NP:M		Transmission not permitted
9	Auto-Negotiation reserved code 1	28C.1	NP:M		Transmission of M10 to M0 equals 0, not permitted
10	Null Message Code	28C.2	NP:M		Transmitted during Next Page exchange when the Local Device has no information to transmit and Link Partner has additional pages to transmit
11	Remote Fault Identifier Message Code	28C.5	NP:M		Followed by single Unformatted Page to identify fault type with types defined in 28C.5

Copyright © 2005 IEEE. All rights reserved.
This is an unapproved IEEE Standards Draft, subject to change.

28.5.4.10 Auto-Negotiation annexes *(continued)*

Item	Feature	Annex	Status	Support	Value/comment
12	Organizationally Unique Identifier Message Code	28C.6	NP:M		Followed by 4 Unformatted Pages. First Unformatted Page contains most significant 11 bits of OUI (bits 23:13) with MSB in U10; Second Unformatted Page contains next most significant 11 bits of OUI (bits 12:2), with MSB in U10; Third Unformatted Page contains the least significant 2 bits of OUI (bits 1:0) with MSB in U10, bits U8:0 contains user-defined code specific to OUI; Fourth Unformatted Page contains user-defined code specific to OUI
13	PHY Identifier Message Code	28C.7	NP:M		Followed by 4 Unformatted Pages. First Unformatted Page contains most significant 11 bits of PHY ID (2.15:5) with MSB in U10; Second Unformatted Page contains PHY ID bits 2.4:0 to 3.15:10, with MSB in U10; Third Unformatted Page contains PHY ID bits 3.9:0, with MSB in U10, and U0 contains user-defined code specific to PHY ID; Fourth Unformatted Page contains user-defined code specific to PHY ID
14	Auto-Negotiation reserved code 2	28C.8	NP:M		Transmission of M10 to M0 equals 1, not permitted

28.6 Auto-Negotiation expansion

Auto-Negotiation is designed in a way that allows it to be easily expanded as new technologies are developed. When a new technology is developed, the following things must be done to allow Auto-Negotiation to support it:

a) The appropriate Selector Field value to contain the new technology must be selected and allocated.
b) A Technology bit must be allocated for the new technology within the chosen Selector Field value.
c) The new technology's relative priority within the technologies supported within a Selector Field value must be established.

Code space allocations are enumerated in Annex 28A, Annex 28B, and Annex 28C. Additions and insertions to the annexes are allowed. No changes to existing bits already defined are allowed.

Copyright © 2005 IEEE. All rights reserved.
This is an unapproved IEEE Standards Draft, subject to change.

Revisions to IEEE Draft P802.3REVam Annex 28B

EDITORIAL NOTES - This supplement is based on the current draft of IEEE Draft P802.3REVam/D2.1. The editing instructions define how to merge the material contained here into this base document set to form the new comprehensive standard as created by the addition of P802.3an.

Editing instructions are shown in ***bold italic***. Three editing instructions are used: change, delete, and insert. ***Change*** is used to make small corrections in existing text or tables. The editing instruction specifies the location of the change and describes what is being changed either by using ~~strikethrough~~ (to remove old material) or underscore (to add new material). ***Delete*** removes existing material. ***Insert*** adds new material without disturbing the existing material. Insertions may require renumbering. If so, renumbering instructions are given in the editing instruction. Editorial notes will not be carried over into future editions.

Editors' Notes: *To be removed prior to final publication.*

References:
None.

Definitions:
None.

Abbreviations:
None.

Revision History:

Draft 1.0, September 2004	First draft for IEEE P802.3an Task Force review.
Draft 1.1, October 2004	Second draft for IEEE P802.3an Task Force review.
Draft 1.2, December 2004	Third draft for IEEE P802.3an Task Force review.
Draft 1.3, January 2005	Fourth draft for IEEE P802.3an Task Force review.
Draft 1.4, February 2005	Fifth draft for IEEE P802.3an Task Force review.

Copyright © 2005 IEEE. All rights reserved.
This is an unapproved IEEE Standards Draft, subject to change.

Annex 28B

(normative)

28B.2 Technology Ability Field bit assignments

Change 28B.2 and Table 28B-1 as follows, removing bit A7 from the table.

The Technology bit field consists of bits D5 through D~~12~~ 11 (A0–A~~7~~6, respectively) in the IEEE 802.3 Selector Base Page. Table 28B–1 summarizes the bit assignments.

Note that the order of the bits within the Technology Ability Field has no relationship to the relative priority of the technologies.

Setting Bit A5 or Bit A6 indicates that the DTE has implemented both the optional MAC control sublayer and the PAUSE function as specified in Clause 31 and Annex 31B. This capability is significant only when the link is configured for full duplex operation, regardless of data rate and medium. The encoding of Bits A5 and A6 is specified in Table 28B–2.

Table 28B–1—Technology Ability Field bit assignments

Bit	Technology	Minimum cabling requirement
A0	10BASE-T	Two-pair category 3
A1	10BASE-T full duplex	Two-pair category 3
A2	100BASE-TX	Two-pair category 5
A3	100BASE-TX full duplex	Two-pair category 5
A4	100BASE-T4	Four-pair category 3
A5	PAUSE operation for full duplex links	Not applicable
A6	Asymmetric PAUSE operation for full duplex Links	Not applicable
~~A7~~	~~Reserved for future technology~~	

28B.3 Priority resolution

Since two devices may have multiple abilities in common, a prioritization scheme exists to ensure that the highest common denominator ability is chosen. The following list shall represent the relative priorities of the technologies supported by the IEEE 802.3 Selector Field value, where priorities are listed from highest to lowest.

Insert "10GBASE-T full duplex" as bullet (a) and renumber other bullets in subclause 28B.3

a) 10GBASE-T full duplex
a) 1000BASE-T full duplex
b) 1000BASE-T
c) 100BASE-T2 full duplex
d) 100BASE-TX full duplex
e) 100BASE-T2
f) 100BASE-T4
g) 100BASE-TX
h) 10BASE-T full duplex

Copyright © 2005 IEEE. All rights reserved.
This is an unapproved IEEE Standards Draft, subject to change.

i) 10BASE-T

The rationale for this hierarchy is straightforward. 10BASE-T is the lowest common denominator and therefore has the lowest priority. Full duplex solutions are always higher in priority than their half duplex counterparts. 1000BASE-T has a higher priority than 100 Mb/s technologies. 100BASE-T2 is ahead of 100BASE-TX and 100BASE-T4 because 100BASE-T2 runs across a broader spectrum of copper cabling and can support a wider base of configurations. 100BASE-T4 is ahead of 100BASE-TX because 100BASE-T4 runs across a broader spectrum of copper cabling. The relative order of the technologies specified herein shall not be changed. As each new technology is added, it shall be inserted into its appropriate place in the list, shifting technologies of lesser priority lower in priority. If a vendor-specific technology is implemented, the priority of all IEEE 802.3 standard technologies shall be maintained, with the vendor specific technology inserted at any appropriate priority location.

The use of the PAUSE operation for full duplex links (as indicated by bits A5 and A6) is orthogonal to the negotiated data rate, medium, or link technology. The setting of these bits indicates the availability of additional DTE capability when full duplex operation is in use. The PAUSE function shall be enabled according to Table 28B–2 only if the Highest Common Denominator is a full duplex technology. There is no priority resolution associated with the PAUSE operation.

Table 28B–2—Pause resolution

Local device		Link partner		Local device resolution	Link partner resolution
PAUSE	ASM_DIR	PAUSE	ASM_DIR		
0	0	Don’t care	Don’t care	Disable PAUSE Transmit and Receive	Disable PAUSE Transmit and Receive
0	1	0	Don’t care	Disable PAUSE Transmit and Receive	Disable PAUSE Transmit and Receive
0	1	1	0	Disable PAUSE Transmit and Receive	Disable PAUSE Transmit and Receive
0	1	1	1	Enable PAUSE transmit Disable PAUSE receive	Enable PAUSE receive Disable PAUSE transmit
1	0	0	Don’t care	Disable PAUSE Transmit and Receive	Disable PAUSE Transmit and Receive
1	Don’t care	1	Don’t care	Enable PAUSE Transmit and Receive	Enable PAUSE Transmit and Receive
1	1	0	0	Disable PAUSE Transmit and Receive	Disable PAUSE Transmit and Receive
1	1	0	1	Enable PAUSE receive Disable PAUSE transmit	Enable PAUSE transmit Disable PAUSE receive

Copyright © 2005 IEEE. All rights reserved.
This is an unapproved IEEE Standards Draft, subject to change.

Revisions to IEEE Draft P802.3REVam Annex 28C

EDITORIAL NOTES - This supplement is based on the current draft of IEEE Draft P802.3REVam/D2.1. The editing instructions define how to merge the material contained here into this base document set to form the new comprehensive standard as created by the addition of P802.3an.

Editing instructions are shown in ***bold italic***. Three editing instructions are used: change, delete, and insert. ***Change*** is used to make small corrections in existing text or tables. The editing instruction specifies the location of the change and describes what is being changed either by using ~~strikethrough~~ (to remove old material) or underscore (to add new material). ***Delete*** removes existing material. ***Insert*** adds new material without disturbing the existing material. Insertions may require renumbering. If so, renumbering instructions are given in the editing instruction. Editorial notes will not be carried over into future editions.

Editors' Notes: *To be removed prior to final publication.*

References:
None.

Definitions:
None.

Abbreviations:
None.

Revision History:

Draft 1.0, September 2004	First draft for IEEE P802.3an Task Force review.
Draft 1.1, October 2004	Second draft for IEEE P802.3an Task Force review.
Draft 1.2, December 2004	Third draft for IEEE P802.3an Task Force review.
Draft 1.3, January 2005	Fourth draft for IEEE P802.3an Task Force review.
Draft 1.4, February 2005	Fifth draft for IEEE P802.3an Task Force review.

Copyright © 2005 IEEE. All rights reserved.
This is an unapproved IEEE Standards Draft, subject to change.

Annex 28C

(normative)

Next Page Message Code Field definitions

The Message Code Field of a message page used in Next Page exchange shall be used to identify the meaning of a message. The following table identifies the types of messages that may be sent. As new messages are developed, this table will be updated accordingly.

Insert the following text in subclause 28C. ChangeTable 28C-1 as follows, replacing the reserved row 9 with 10GBASE-T/1000BASE-T code.

The Message Code Field uses an 11-bit binary encoding that allows 2048 messages to be defined. All Message Codes not specified shall be reserved for IEEE use or allocation. Devices that have negotiated extended Next Page support will only transmit extended Next Pages.

Extended Next Pages may be used to send multiple 16-bit next pages in the following manner. The 11-bit Message Code Field is mapped to bits M0:10 of the extended next page, and the first two unformatted pages associated with the Message Code Field are mapped to bits U0:U10 and U16:U26, respectively of the extended next page. Additional unformatted pages would be mapped to bits M0:10, U0:10, and U16:26 of subsequent extended next pages. Any unused bits in the extended next page are transmitted as zero or one and ignored by the receiver

Table 28C–1—Message code field values

Message Code #	M 10	M 9	M 8	M 7	M 6	M 5	M 4	M 3	M 2	M 1	M 0	Message Code Description
0	0	0	0	0	0	0	0	0	0	0	0	Reserved for future Auto-Negotiation use
1	0	0	0	0	0	0	0	0	0	0	1	Null Message
2	0	0	0	0	0	0	0	0	0	1	0	One UP with Technology Ability Field follows
3	0	0	0	0	0	0	0	0	0	1	1	Two UPs with Technology Ability Field follow
4	0	0	0	0	0	0	0	0	1	0	0	One UP with Binary coded Remote fault follows
5	0	0	0	0	0	0	0	0	1	0	1	Organizationally Unique Identifier Tagged Message
6	0	0	0	0	0	0	0	0	1	1	0	PHY Identifier Tag Code
7	0	0	0	0	0	0	0	0	1	1	1	100BASE-T2 Technology Message Code. 100BASE-T2 Ability Page to follow using Unformatted Next Page

Copyright © 2005 IEEE. All rights reserved.
This is an unapproved IEEE Standards Draft, subject to change.

Table 28C–1—Message code field values ***(continued)***

8	0	0	0	0	0	0	0	1	0	0	0	1000BASE-T Technology Message Code. Two 1000BASE-T Ability Pages to follow using Unformatted Next Pages.
9	0	0	0	0	0	0	0	1	0	0	1	10GBASE-T/1000BASE-T Technology Message Code (extended next page)
10.....	0	0	0	0	0	0	0	1	0	1	0	Reserved for future Auto-Negotiation use
.....2047	1	1	1	1	1	1	1	1	1	1	1	Reserved for future Auto-Negotiation use

Insert the following subclause 28C.11

28C.11 Message Code #9—10GBASE-T and 1000BASE-T technology message code

Clause 55 (10GBASE-T) uses Next Page Message Code 9 to indicate that 10GBASE-T and 1000BASE-T abilities are contained within this extended Next Page. The Next Page that contains this information is defined in 55.6.1. This page shall not be sent if extended next page mode is disabled.

Copyright © 2005 IEEE. All rights reserved.
This is an unapproved IEEE Standards Draft, subject to change.

Revisions to IEEE Draft P802.3REVam Annex 28D

EDITORIAL NOTES - This supplement is based on the current draft of IEEE Draft P802.3REVam/D2.1. The editing instructions define how to merge the material contained here into this base document set to form the new comprehensive standard as created by the addition of P802.3an.

Editing instructions are shown in ***bold italic***. Three editing instructions are used: change, delete, and insert. ***Change*** is used to make small corrections in existing text or tables. The editing instruction specifies the location of the change and describes what is being changed either by using ~~strikethrough~~ (to remove old material) or <u>underscore</u> (to add new material). ***Delete*** removes existing material. ***Insert*** adds new material without disturbing the existing material. Insertions may require renumbering. If so, renumbering instructions are given in the editing instruction. Editorial notes will not be carried over into future editions.

Editors' Notes: *To be removed prior to final publication.*

References:
None.

Definitions:
None.

Abbreviations:
None.

Revision History:

Draft 1.0, September 2004	First draft for IEEE P802.3an Task Force review.
Draft 1.1, October 2004	Second draft for IEEE P802.3an Task Force review.
Draft 1.2, December 2004	Third draft for IEEE P802.3an Task Force review.
Draft 1.3, January 2005	Fourth draft for IEEE P802.3an Task Force review.
Draft 1.4, February 2005	Fifth draft for IEEE P802.3an Task Force review.

Copyright © 2005 IEEE. All rights reserved.
This is an unapproved IEEE Standards Draft, subject to change.

Annex 28D

(normative)

Description of extensions to Clause 28 and associated annexes

28D.5 Extensions required for Clause 40 (1000BASE-T)

Modify subclause 28D.5 as follows for items b and c.

Clause 40 (1000BASE-T) makes special use of Auto-Negotiation and requires additional MII registers. This use is summarized below. Details are provided in 40.5.

a) Auto-Negotiation is mandatory for 1000BASE-T. (40.5.1)
b) 1000BASE-T requires an ordered exchange of Next Page messages. (40.5.1.2)<u>, or optionally an exchange of an extended Next Page message.</u>
c) 1000BASE-T parameters are configured based on information provided by the ~~ordered~~ exchange of NEXT Page messages.
d) 1000BASE-T uses MASTER and SLAVE to define PHY operations and to facilitate the timing of transmit and receive operations. Auto-Negotiation is used to provide information used to configure MASTER-SLAVE status.(40.5.2)
e) 1000BASE-T transmits and receives Next Pages for exchange of information related to MASTER-SLAVE operation. The information is specified in MII registers 9 and 10 (see 32.5.2 and 40.5.1.1), which are required in addition to registers 0-8 as defined in 28.2.4.
f) 1000BASE-T adds new message codes to be transmitted during Auto-Negotiation. (40.5.1.3)
g) 1000BASE-T adds 1000BASE-T full duplex and half duplex capabilities to the priority resolution table. (28B.3) and MII Extended Status Register (22.2.2.4)
h) 1000BASE-T is defined as a valid value for “x” in 28.3.1 (e.g., link_status_1GigT.) 1GigT represents that the 1000BASE-T PMA is the signal source.
i) 1000BASE-T supports Asymmetric Pause as defined in Annex 28B.

Insert the following subclause 28D.6

<u>28D.6 Extensions required for #CrossRef# Clause 55 (10GBASE-T)</u>

<u>Clause 55 (10GBASE-T) makes special use of Auto-Negotiation and requires additional MDIO registers. This use is summarized below. Details are provided in 55.6.</u>

<u>a) Auto-Negotiation is mandatory for 10GBASE-T.</u>
<u>b) Extended Next Page support is mandatory for 10GBASE-T.</u>
<u>c) 10GBASE-T requires an exchange of an extended Next Page message.</u>
<u>d) 10GBASE-T parameters are configured based on information provided by the exchange of an extended NEXT Page message.</u>
<u>e) 10GBASE-T uses MASTER and SLAVE to define PHY operations and to facilitate the timing of transmit and receive operations. Auto-Negotiation is used to provide information used to configure MASTER-SLAVE status.</u>
<u>f) 10GBASE-T transmits and receives an extended Next Page for exchange of information related to MASTER-SLAVE operation. The information is specified in MDIO registers 45.2.7#CrossRef#.</u>
<u>g) 10GBASE-T adds new message codes to be transmitted during Auto-Negotiation.</u>

Copyright © 2005 IEEE. All rights reserved.
This is an unapproved IEEE Standards Draft, subject to change.

h) 10GBASE-T adds 10GBASE-T full duplex capabilities to the priority resolution table (28B.3).

i) 10GBASE-T is defined as a valid value for “x” in 28.3.1 (e.g., link_status_10GigT.) 10GigT represents that the 10GBASE-T PMA is the signal source.Annex 28B

Copyright © 2005 IEEE. All rights reserved.
This is an unapproved IEEE Standards Draft, subject to change.

Copyright © 2005 IEEE. All rights reserved.
This is an unapproved IEEE Standards Draft, subject to change.

Revisions to IEEE P802.3REVam, Clause 30

EDITORIAL NOTES - This revision is based on the current edition of IEEE P802.3REVam. The editing instructions define how to merge the material contained here into this base document set to form the new comprehensive standard as created by the addition of P802.3an.

Editing instructions are shown in ***bold italic***. Three editing instructions are used: change, delete, and insert. ***Change*** is used to make small corrections in existing text or tables. The editing instruction specifies the location of the change and describes what is being changed either by using ~~strikethrough~~ (to remove old material) or underscore (to add new material). ***Delete*** removes existing material. ***Insert*** adds new material without disturbing the existing material. Insertions may require renumbering. If so, renumbering instructions are given in the editing instruction. Editorial notes will not be carried over into future editions.

30. Management

Insert 10GBASE-T attribute to aPhyType.

30.3.2.1.2 aPhyType

ATTRIBUTE

APPROPRIATE SYNTAX:

other	Undefined
unknown	Initializing, true state or type not yet known
none	MII present and nothing connected
2BASE-TL	Clause 61 0.5 Mb/s to 5.5 Mb/s 64/65-octet
10 Mb/s	Clause 7 10 Mb/s Manchester
10PASS-TS	Clause 61 2.5 Mb/s to 100 Mb/s 64/65-octet
100BASE-T4	Clause 23 100 Mb/s 8B/6T
100BASE-X	Clause 24 or subclause 66.1 100 Mb/s 4B/5B
100BASE-T2	Clause 32 100 Mb/s PAM5X5
1000BASE-X	Clause 36 or subclause 66.2 1000 Mb/s 8B/10B
1000BASE-T	Clause 40 1000 Mb/s 4D-PAM5
10GBASE-X	Clause 48 10 Gb/s 4 lane 8B/10B
10GBASE-R	Clause 49 10 Gb/s 64B/66B
10GBASE-W	Clause 49 10 Gb/s 64B/66B and Clause 50 WIS
10GBASE-T	Clause 55 10 Gb/s 128DSQ

BEHAVIOUR DEFINED AS:

A read-only value that identifies the PHY type. The enumeration of the type is such that the value matches the clause number of this International Standard that specifies the particular PHY. The value of this attribute maps to the value of aMAUType. The enumeration “none” can only occur in a standard implementation where an MII exists and there is nothing connected. However, the attribute aMIIDetect should be used to determine whether an MII exists or not.;

Insert 10GBASE-T attribute to aPhyTypeList.

30.3.2.1.3 aPhyTypeList

ATTRIBUTE

APPROPRIATE SYNTAX:

A SEQUENCE that meets the requirements of the description below:

Copyright © 2005 IEEE. All rights reserved.
This is an unapproved draft, subject to change

other	Undefined
unknown	Initializing, true state or type not yet known
none	MII present and nothing connected
2BASE-TL	Clause 61 0.5 Mb/s to 5.5 Mb/s 64/65-octet
10 Mb/s	Clause 7 10 Mb/s Manchester
10PASS-TS	Clause 61 2.5 Mb/s to 100 Mb/s 64/65-octet
100BASE-T4	Clause 23 100 Mb/s 8B/6T
100BASE-X	Clause 24 or subclause 66.1 100 Mb/s 4B/5B
100BASE-T2	Clause 32 100 Mb/s PAM5X5
1000BASE-X	Clause 36 or subclause 66.2 1000 Mb/s 8B/10B
1000BASE-T	Clause 40 1000 Mb/s 4D-PAM5
10GBASE-X	Clause 48 10 Gb/s 4 lane 8B/10B
10GBASE-R	Clause 49 10 Gb/s 64B/66B
10GBASE-W	Clause 49 10 Gb/s 64B/66B and Clause 50 WIS
10GBASE-T	Clause 55 10 Gb/s 128DSQ

BEHAVIOUR DEFINED AS:

A read-only list of the possible types that the PHY could be, identifying the ability of the PHY. If Clause 28 or Clause 37, Auto-Negotiation, is present, then this attribute will map to the local technology ability or advertised ability of the local device.;

NOTE—At 10 Gb/s the ability of the PMD must be taken into account when reporting the possible types that the PHY could be.;

Insert 10GBASE-T attribute to aMAUType.

30.5.1.1.2 aMAUType

ATTRIBUTE

APPROPRIATE SYNTAX:

A GET-SET ENUMERATION that meets the requirements of the following description:

global	undefined
other	See 30.2.5
unknown	Initializing, true state or type not yet known
AUI	no internal MAU, view from AUI
2BASE-TL	Voice grade UTP PHY as specified in Clause 61 and 63
10BASE5	Thick coax MAU as specified in Clause 8
FOIRL	FOIRL MAU as specified in 9.9
10BASE2	Thin coax MAU as specified in Clause 10
10BROAD36	Broadband DTE MAU as specified in Clause 11
10BASE-T	UTP MAU as specified in Clause 14, duplex mode unknown
10BASE-THD	UTP MAU as specified in Clause 14, half duplex mode
10BASE-TFD	UTP MAU as specified in Clause 14, full duplex mode
10PASS-TS	Voice grade UTP PHY as specified in Clause 61 and 62
10BASE-FP	Passive fiber MAU as specified in Clause 16
10BASE-FB	Synchronous fiber MAU as specified in Clause 17
10BASE-FL	Asynchronous fiber MAU as specified in Clause 18, duplex mode unknown
10BASE-FLHD	Asynchronous fiber MAU as specified in Clause 18, half duplex mode
10BASE-FLFD	Asynchronous fiber MAU as specified in Clause 18, full duplex mode
100BASE-T4	Four-pair Category 3 UTP as specified in Clause 23
100BASE-TX	Two-pair Category 5 UTP as specified in Clause 25, duplex mode unknown
100BASE-TXHD	Two-pair Category 5 UTP as specified in Clause 25, half duplex mode
100BASE-TXFD	Two-pair Category 5 UTP as specified in Clause 25, full duplex mode
100BASE-BX10D	One single-mode fiber OLT PHY as specified in Clause 58

Copyright © 2005 IEEE. All rights reserved.
This is an unapproved draft, subject to change

100BASE-BX10UOne single-mode fiber ONU PHY as specified in Clause 58
100BASE-FX X fiber over PMD as specified in Clause 26, duplex mode unknown
100BASE-FXHDX fiber over PMD as specified in Clause 26, half duplex mode
100BASE-FXFD X fiber over PMD as specified in Clause 26, full duplex mode
100BASE-LX10 Two fiber PHY as specified in Clause 58
100BASE-T2 Two-pair Category 3 UTP as specified in Clause 32, duplex mode unknown
100BASE-T2HD Two-pair Category 3 UTP as specified in Clause 32, half duplex mode
100BASE-T2FD Two-pair Category 3 UTP as specified in Clause 32, full duplex mode
1000BASE-X X PCS/PMA as specified in Clause 36 over undefined PMD, duplex mode unknown
1000BASE-BX10DOne single-mode fiber OLT PHY as specified in Clause 59
1000BASE-BX10UOne single-mode fiber ONU PHY as specified in Clause 59
1000BASE-XHD X PCS/PMA as specified in Clause 36 over undefined PMD, half duplex mode
1000BASE-XFD X PCS/PMA as specified in Clause 36 over undefined PMD, full duplex mode
1000BASE-LX X fiber over long-wavelength laser PMD as specified in Clause 38, duplex mode unknown
1000BASE-LXHD X fiber over long-wavelength laser PMD as specified in Clause 38, half duplex mode
1000BASE-LXFDX fiber over long-wavelength laser PMD as specified in Clause 38, full duplex mode
1000BASE-LX10Two fiber 10 km PHY as specified in Clause 59
1000BASE-PX10DOne single-mode fiber OMP OLT 10 km PHY as specified in Clause 60
1000BASE-PX10UOne single-mode fiber OMP ONU 10 km PHY as specified in Clause 60
1000BASE-PX20DOne single-mode fiber OMP OLT 20 km PHY as specified in Clause 60
1000BASE-PX20UOne single-mode fiber OMP ONU 20 km PHY as specified in Clause 60
1000BASE-SX X fiber over short-wavelength laser PMD as specified in Clause 38, duplex mode unknown
1000BASE-SXHD X fiber over short-wavelength laser PMD as specified in Clause 38, half duplex mode
1000BASE-SXFD X fiber over short-wavelength laser PMD as specified in Clause 38, full duplex mode
1000BASE-CX X copper over 150-Ohm balanced cable PMD as specified in Clause 39, duplex mode unknown
1000BASE-CXHDX copper over 150-Ohm balanced cable PMD as specified in Clause 39, half duplex mode
1000BASE-CXFD X copper over 150-Ohm balanced cable PMD as specified in Clause 39, full duplex mode
1000BASE-T Four-pair Category 5 UTP PHY to be specified in Clause 40, duplex mode unknown
1000BASE-THD Four-pair Category 5 UTP PHY to be specified in Clause 40, half duplex mode
1000BASE-TFD Four-pair Category 5 UTP PHY to be specified in Clause 40, full duplex mode
10GBASE-X X PCS/PMA as specified in Clause 48 over undefined PMD
10GBASE-LX4 X fibre over 4 lane 1310nm optics as specified in Clause 53
10GBASE-CX4 X copper over 8 pair 100-Ohm balanced cable as specified in Clause 54
10GBASE-R R PCS/PMA as specified in Clause 49 over undefined PMD
10GBASE-ER R fibre over 1550nm optics as specified in Clause 52
10GBASE-LR R fibre over 1310nm optics as specified in Clause 52
10GBASE-SR R fibre over 850nm optics as specified in Clause 52
10GBASE-W W PCS/PMA as specified in Clauses 49 and 50 over undefined PMD
10GBASE-EW W fibre over 1550nm optics as specified in Clause 52

Copyright © 2005 IEEE. All rights reserved.
This is an unapproved draft, subject to change

10GBASE-LW	W fibre over 1310nm optics as specified in Clause 52
10GBASE-SW	W fibre over 850nm optics as specified in Clause 52
10GBASE-T	Four-pair twisted-pair balanced copper cabling PHY as specified in Clause 55
802.9a	Integrated services MAU as specified in IEEE Std 802.9™ ISLAN-16T

BEHAVIOUR DEFINED AS:

Returns a value that identifies the internal MAU type. If an AUI is to be identified to access an external MAU, the type "AUI" is returned. A SET operation to one of the possible enumerations indicated by aMAUTypeList will force the MAU into the new operating mode. If a Clause 22 MII or Clause 35 GMII is present, then this will map to the mode force bits specified in 22.2.4.1. If a Clause 45 MDIO Interface is present, then this will map to the PCS type selection bit(s) in the 10G WIS Control 2 register specified in 45.2.2.6.6, the 10G PCS Control 2 register specified in 45.2.3.6.1, the PMA/PMD type selection bits in the 10G PMA/PMD Control 2 register specified in 45.2.1.6.1, the PMA/PMD control 1 register specified in 45.2.1.1 and the PCS control 1 register 45.2.3.1. If Clause 28 or Clause 37 Auto-Negotiation is operational, then this will change the advertised ability to the single enumeration specified in the SET operation, and cause an immediate link renegotiation. A change in the MAU type will also be reflected in aPHYType.

The enumerations 1000BASE-X, 1000BASE-XHD, 1000BASE-XFD, 10GBASE-X, 10GBASE-R and 10GBASE-W shall only be returned if the underlying PMD type is unknown.;

Copyright © 2005 IEEE. All rights reserved.
This is an unapproved draft, subject to change

Revisions to IEEE P802.3REVam, Annex 30B

EDITORIAL NOTES - This revision is based on the current edition of IEEE P802.3REVam. The editing instructions define how to merge the material contained here into this base document set to form the new comprehensive standard as created by the addition of P802.3an.

Editing instructions are shown in ***bold italic***. Three editing instructions are used: change, delete, and insert. ***Change*** is used to make small corrections in existing text or tables. The editing instruction specifies the location of the change and describes what is being changed either by using ~~strikethrough~~ (to remove old material) or underscore (to add new material). ***Delete*** removes existing material. ***Insert*** adds new material without disturbing the existing material. Insertions may require renumbering. If so, renumbering instructions are given in the editing instruction. Editorial notes will not be carried over into future editions.

Annex 30B

(normative)

GDMO and ASN.1 definitions for management

Insert 10GBASE-T into the ASN.1 module.

30B.2 ASN.1 module for CSMA/CD managed objects

This ASN.1 module defines the ASN.1 types and subtypes that are referred to immediately after the WITH ATTRIBUTE SYNTAX construct in this clause's uses of the attribute template defined in ISO/IEC 10165-4: 1992, Guidelines for the definition of managed objects (GDMO).

```
IEEE802Dot3-MgmtAttributeModule {iso(1) std(0) iso8802(8802) csma(3) global(1) asn1Module(2)
commonDefinitions(0) version(2)} DEFINITIONS IMPLICIT TAGS::= BEGIN

EXPORTS--everything

IMPORTS--implicitly imports ISO 8824: 1990

    MACAddress
        FROM IEEE802CommonDefinitions
        {iso(1) member-body(2) us(840) ieee802dot1partF(10011)
        asn1Module(2) commonDefinitions(0) version1(0)};

    AdminState::= ENUMERATED {
        other           (1),    --undefined
        unknown         (2),    --initializing, true state not yet known
        operational     (3),    --powered and connected
        standby         (4),    --inactive but on
        shutdown        (5)     --similar to power down
        }

    AggDataRate ::= INTEGER (0..2^32-1)--The data rate of an Aggregation


    AggID ::= INTEGER (0..2^32-1)
```

Copyright © 2005 IEEE. All rights reserved.
This is an unapproved draft, subject to change

```
AggOrInd ::= BOOLEAN

AggPortID ::= INTEGER (0..2^32-1)

AggPortList ::= SEQUENCE OF AggPortID

AggPortState ::= BIT STRING (SIZE (1..8))

AggState ::= ENUMERATED {
        up                      (0),    --operational
        down                    (1)     --disabled
        }

AttemptArray::= SEQUENCE OF aCMCounter--array [1..attempt limit - 1]

AutoNegAdminState::= ENUMERATED {
        disabled                (1),
        enabled                 (2)
        }

AutoNegAutoConfig::= ENUMERATED {
        other                   (1),
        configuring             (2),
        complete                (3),
        disabled                (4),
        parallel detect fail    (5)
        }

AutoNegRemoteSignalingDetect::= ENUMERATED {
        detected                (1),
        notdetected             (2)
        }

AutoNegSelector::= ENUMERATED {
        other                   (1),    --undefined
        ethernet                (2),    --802.3
        isoethernet             (3)     --802.9
        }

AutoNegSelectorList::= SEQUENCE OF AutoNegSelector

AutoNegTechnology::= ENUMERATED {
        global                  (0),    --reserved for future use.
        other                   (1),    --undefined
```


Copyright © 2005 IEEE. All rights reserved.
This is an unapproved draft, subject to change

```
    unknown             (2),    --initializing, true ability not yet known.
    10BASE-T            (14),   --10BASE-T as defined in Clause 14
    10BASE-TFD          (142),  --Full duplex 10BASE-T as defined in Clauses 14 and 31
    100BASE-T4          (23),   --100BASE-T4 as defined in Clause 23
    100BASE-TX          (25),   --100BASE-TX as defined in Clause 25
    100BASE-TXFD        (252),  --Full duplex 100BASE-TX as defined in Clauses 25 and 31
    FDX PAUSE           (312),  --PAUSE operation for full duplex links as defined in
    Annex 31B
    FDX APAUSE          (313),  --Asymmetric PAUSE operation for full duplex links as defined
                                 in Clause 37 and Annex 31B
    FDX SPAUSE          (314),  --Symmetric PAUSE operation for full duplex links as defined
                                 in Clause 37 and Annex 31B
    FDX BPAUSE          (315),  --Asymmetric and Symmetric PAUSE operation for full duplex
                                 links as defined in Clause 37 and Annex 31B
    100BASE-T2          (32),   --100BASE-T2 as defined in Clause 32
    100BASE-T2FD        (322),  --Full duplex 100BASE-T2 as defined in Clauses 31 and 32
    1000BASE-X          (36),   --1000BASE-X as defined in Clause 36
    1000BASE-XFD        (362),  --Full duplex 1000BASE-X as defined in Clause 36
    1000BASE-T          (40),   --1000BASE-T UTP PHY as defined in Clause 40
    1000BASE-TFD        (402),  --Full duplex 1000BASE-T UTP PHY to be defined in
    Clause 40
    10GBASE-T           (55),   --10GBASE-T PHY as defined in Clause 55
    Rem Fault1          (37),   --Remote fault bit 1 (RF1) as specified in Clause 37
    Rem Fault2          (372),  --Remote fault bit 2 (RF1) as specified in Clause 37
    isoethernet         (8029)  --802.9 ISLAN-16T
    }

AutoNegTechnologyList::= SEQUENCE OF AutoNegTechnology

AutoPartitionState::= ENUMERATED {
    autoPartitioned     (1),
    notAutoPartitioned  (2)
    }


BbandFrequency::= SEQUENCE {
    xmitCarrierFrequency    [1]     INTEGER , --Frequency in MHz times 4 (250 kHz resolution)
    translationFrequency    [2]     INTEGER   --Frequency in MHz times 4 (250 kHz resolution)
    }


BbandXmitRcvSplitType::= ENUMERATED {
    other               (1),    --undefined
    single              (2),    --single-cable system
    dual                (3)     --dual-cable system, offset normally zero
    }


BitString::= BIT STRING (SIZE (1..1024))


ChurnState ::= ENUMERATED {
    noChurn             (0),    --NO_ACTOR/PARTNER_CHURN
                                --or ACTOR/PARTNER_CHURN_MONITOR
    churn               (1)     --ACTOR/PARTNER_CHURN
```

Copyright © 2005 IEEE. All rights reserved.
This is an unapproved draft, subject to change

```
                                    }


CollectorMaxDelay ::= INTEGER       --16 bit value, tens of microseconds
                                    --(max = 0.65535 seconds)


CurrentStatus ::= ENUMERATED {
    MPSAbsent           (0),        -- MPS absent
    ok                  (1)         -- MPS present and over current not detected
    }


DeferControl::= ENUMERATED {
    unknown             (1),        --defer control mode unknown
    defer control off   (2),        --defer control mode disabled
    defer control on    (3)         --defer control mode enabled
    }


DescriptionString ::= PrintableString (SIZE 0..255))


DetectStatus ::= ENUMERATED {
    disabled            (0),        -- PSE disabled
    searching           (1),        -- PSE searching
    deliveringPower     (2),        -- PSE delivering power
    test                (3),        -- PSE test mode
    fault               (4),        -- PSE fault detected
    otherFault          (5)         -- PSE implementation specific fault detected
    }


DuplexValues::= ENUMERATED {
    half duplex         (1),        --capable of operating in half duplex mode
    full duplex         (2),        --capable of operating in full duplex mode
    unknown             (3)         --unknown duplex capability
    }


FarEndPathStatus ::= BIT STRING (SIZE (2))


FECMode::= ENUMERATED {
    unknown             (1),        --initializing, true state not yet known
    supported           (2),        --FEC supported
    not supported       (3)         --FEC not supported
    }


Integer8::= INTEGER (0..2^8-1)      --8 bit value


Integer16::= INTEGER (0..2^16-1)    --16 bit value
```


Copyright © 2005 IEEE. All rights reserved.
This is an unapproved draft, subject to change

```
Integer32 ::= INTEGER (0..2^32-1)     --32 bit value


Integer48::= INTEGER (0..2^48-1)      --48 bit value


Integer64::= INTEGER (0..2^64-1)      --64 bit value


Jabber::= SEQUENCE {
    jabberFlag          [1]     JabberFlag,
    jabberCounter       [2]     JabberCounter
    }


JabberFlag::= ENUMERATED {
    other               (1),    --undefined
    unknown             (2),    --initializing, true state not yet known
    normal              (3),    --state is true or normal
    fault               (4)     --state is false, fault or abnormal
    }


JabberCounter::= INTEGER (0..2^32- 1)


JValue::= OCTET STRING (SIZE (16))


KeyValue ::= INTEGER (0..2^16-1)      --16 bit value; range 0-65535


LACPActivity ::= ENUMERATED {
    active              (0),    --Port is Active LACP
    passive             (1)     --Port is Passive LACP
    }


LACPTimeout ::= ENUMERATED {
    short               (0),    --Timeouts are Short
    long                (1)     --Timeouts are Long
    }


LineStatus ::= BIT STRING (SIZE (2))


LinkDelayAllowance::= INTEGER (0..2^32 - 1)


MACControlFunctions::= ENUMERATED {
    PAUSE               (312)   --PAUSE command implemented
    }


MACControlFunctionsList::= SEQUENCE OF MACControlFunctions
```

Copyright © 2005 IEEE. All rights reserved.
This is an unapproved draft, subject to change

```
MACCapabilitiesList::= SEQUENCE OF DuplexValues

MauTypeList::= SEQUENCE OF TypeValue

MediaAvailState::= ENUMERATED {
    other               (1),    --undefined
    unknown             (2),    --initializing, true state not yet known
    available           (3),    --link or light normal, loopback normal
    not available       (4),    --link loss or low light, no loopback
    remote fault        (5),    --remote fault with no detail
    invalid signal      (6),    --invalid signal, applies only to 10BASE-FB
    remote jabber       (7),    --remote fault, reason known to be jabber
    remote link loss    (8),    --remote fault, reason known to be far-end link loss
    remote test         (9),    --remote fault, reason known to be test
    offline             (10),   --offline, applies only to Clause 37 Auto-Negotiation
    auto neg error      (11)    --Auto-Negotiation error, applies only to Clause 37 Auto-
                                Negotiation
    PMD link fault      (12)    --PMD/PMD receive link fault
    WIS frame loss      (13)    --WIS loss of frame , applies only to 10GBASE-W
    WIS signal loss     (14)    --WIS loss of signal, applies only to 10GBASE-W
    PCS link fault      (15)    --PCS receive link fault
    excessive BER       (16)    --PCS Bit Error Ratio monitor reporting excessive error ratio
    DXS link fault      (17)    --DTE XS receive link fault, applies only to XAUI
    PXS link fault      (18)    --PHY XS transmit link fault, applies only to XAUI
    }

MIIDetect::= ENUMERATED {
    unknown             (1),
    presentNothingConnected(2),
    presentConnected    (3),
    absent              (4)
    }

MPCPMode::= ENUMERATED {
    OLT                 (1),    --sublayer operating in OLT mode
    ONU                 (2)     --sublayer operating in ONU mode
    }

MPCPRegState::= ENUMERATED {
    unregistered        (1),    --unregistered
    registering         (2),    --registering
    registered          (3)     --registered
    }

MulticastAddressList::= SEQUENCE OF MACAddress
```


Copyright © 2005 IEEE. All rights reserved.
This is an unapproved draft, subject to change

```
MuxState ::= ENUMERATED {
    detached                (0),    --DETACHED
    waiting                 (1),    --WAITING
    attached                (2),    --ATTACHED
    collecting              (3),    --COLLECTING
    distributing            (4),    --DISTRIBUTING
    collecting_distributing (5)     --COLLECTING_DISTRIBUTING
    }


NotificationEnable ::= ENUMERATED {
    enabled                 (0),    --Notifications enabled
    disabled                (1)     --Notifications disabled


OAMConfig::= BIT STRING (SIZE (5))


OAMDiscoveryState::= ENUMERATED {
    link fault              (1),
    active send local       (2),
    passive wait            (3),
    send local remote       (4),
    send any                (5)
    }


OAMErrorConf::= SEQUENCE {
    OAMEventWindow          [1]     Integer64,
    OAMEventThreshold       [2]     Integer64
    }


OAMErrorEvent::= SEQUENCE {
    OAMEventTimeStamp       [1]     Integer16,
    OAMEventWindow          [2]     Integer64,
    OAMEventThreshold       [3]     Integer64,
    OAMErrors               [4]     Integer64,
    OAMErrorRunTotal        [5]     Integer64,
    OAMEventRunTotal        [6]     Integer32
    }


OAMFlagsField::= BIT STRING (SIZE (7))


OAMMode::= ENUMERATED {
    passive                 (1),    --passive
    active                  (2)     --active
    }


OAMState::= BIT STRING (SIZE (3))
```

Copyright © 2005 IEEE. All rights reserved.
This is an unapproved draft, subject to change

```
OMPEmulationType::= ENUMERATED {
    unknown         (1),    --Initializing, true state or type not yet known
    OLT             (2),    --Sublayer operating in OLT mode
    ONU             (3)     --Sublayer operating in ONU mode
    }


OneOfName::= INTEGER (1..1024)


OUI::= OCTETSTRING          -- Length 3 octets


PairCtrlAbility ::=BOOLEAN


PathStatus ::= BIT STRING (SIZE (4))


PHYCurrentState::= ENUMERATED {
    noPMEAssigned       (1),    --no PME assigned in case of PME aggregation
    lossOfFraming       (2),    --one or more PME in aggregation indicates Loss of Framing
    lossOfSignal        (3),    --one or more PME in aggregation indicates Loss of Signal
    lossOfPower         (4),    --one or more PME in aggregation indicates Loss of Power,
                                  10PASS-TS only
    configInitFailure   (5),    --configuration initialization failure
    noPeerPMEPresent    (6),    --one or more PME in aggregation indicates no peer PME
                                  present
    snrMarginViolation  (7),    --one or more PME in aggregation indicates SNR Margin
                                  Violation
    lineAttenViolation  (8)     --one or more PME in aggregation indicates Loop Attenuation
                                  Violation
    }


PHYEnd::= ENUMERATED {
    subscriber          (1),    --Subscriber mode of operation
    office              (2)     --Office mode of operation
    }


PhyTypeList::= SEQUENCE OF PhyTypeValue


PhyTypeValue::= ENUMERATED {
    other               (1),    --undefined
    unknown             (2),    --initializing, true state or type not yet known
    none                (3),    --MII present and nothing connected
    10 Mb/s             (7),    --Clause 7 10 Mb/s Manchester
    100BASE-T4          (23),   --Clause 23 100 Mb/s 8B/6T
    100BASE-X           (24),   --Clause 24 100 Mb/s 4B/5B
    100BASE-T2          (32),   --Clause 32 100 Mb/s PAM5x5
    1000BASE-X          (36),   --Clause 36 1000 Mb/s 8B/10B
    1000BASE-T          (40)    --Clause 40 1000 Mb/s 4D-PAM5
    10GBASE-X           (48)    --Clause 48 10 Gb/s 4
```


Copyright © 2005 IEEE. All rights reserved.
This is an unapproved draft, subject to change

```
    10GBASE-R           (49)    --Clause 49 10 Gb/s 64B/66B
    10GBASE-W           (50),   --Clause 49 10 Gb/s 64B/66B and Clause 50 WIS
    10GBASE-T           (55),   --Clause 55 10 Gb/s 128DSQ
    10PASS-TS           (62),   --Clause 61 2.5 Mb/s to 100 Mb/s 64/65-octet
    2BASE-TL            (63)    --Clause 61 0.5 Mb/s to 5.5 Mb/s 64/65-octet
    }


PMEOperatingProfile::= SEQUENCE {
    PMEProfileState     [1]     PMEProfileState,
    PMEProfileNumber    [2]     Integer8
    }


PMEProfile::= SEQUENCE {
    profile1            [1]     Integer8,
    profile2            [2]     Integer8,
    profile3            [3]     Integer8,
    profile4            [4]     Integer8,
    profile4            [5]     Integer8,
    profile4            [6]     Integer8
    }


PMEProfileState::= ENUMERATED {
    no link             (1),    --link is not up
    match               (2),    --link up using a profile
    no match            (3),    --link up not using a profile
    activate failure    (4)     --link activate failure
    }


PMEStatus::= ENUMERATED {
    down not ready      (1),    --link is down, not ready
    down ready          (2),    --link is down, ready
    initializing        (3),    --link is initializing
    10PASS-TS           (4),    --link is up as 10PASS-TS
    2BASE-TL            (5)     --link is up as 2BASE-TL
    }


PortAdminState::= ENUMERATED {
    disabled            (1),
    enabled             (2)
    }


PortNumber ::= INTEGER (0..2^16-1)


PowerClass ::= ENUMERATED {
    class0              (0),    -- Class 0 PD
    class1              (1),    -- Class 1 PD
    class2              (2),    -- Class 2 PD
```

Copyright © 2005 IEEE. All rights reserved.
This is an unapproved draft, subject to change

```
        class3              (3),    -- Class 3 PD
        class4              (4)     -- Class 4 PD
        }


PriorityValue ::= INTEGER (0..2^16-1) --16 bits


PSEPowerPairs ::= ENUMERATED {
        signal              (0),    -- PSE Pinout Alternative A
        spare               (1)     -- PSE Pinout Alternative B
        }


RateValues ::= ENUMERATED {
        rate control off    (1),    -- rate control enabled
        rate control on     (2),    -- rate control disabled
        unknown             (3)     -- rate control mode unknown
        }


RegisterEight::= INTEGER (0..255)


RepeaterHealthData::= OCTET STRING (SIZE (0..255))


RepeaterHealthInfo::= SEQUENCE {
        repeaterHealthState     [1]     RepeaterHealthState,
        repeaterHealthText      [2]     RepeaterHealthText  OPTIONAL,
        repeaterHealthData      [3]     RepeaterHealthData  OPTIONAL
        }


RepeaterHealthState::= ENUMERATED {
        other               (1),    --undefined or unknown
        ok                  (2),    --no known failures
        repeaterFailure     (3),    --known to have a repeater-related failure
        groupFailure        (4),    --known to have a group-related failure
        portFailure         (5),    --known to have a port-related failure
        generalFailure      (6)     --has a failure condition, unspecified type
        }


RepeaterType::= ENUMERATED {
        other               (1),    --See 30.2.5:
        unknown             (2),    --initializing, true state or type not yet known
        10 Mb/s             (9),    --Clause 9 10 Mb/s Baseband repeater
        100 Mb/sClassI      (271),  --Clause 27 class I 100 Mb/s Baseband repeater
        100 Mb/sClassII     (272),  --Clause 27 class II 100 Mb/s Baseband repeater
        1000 Mb/s           (41),   --Clause 41 1000 Mb/s Baseband repeater
        802.9a              (99)    --Integrated services repeater
        }
```


Copyright © 2005 IEEE. All rights reserved.
This is an unapproved draft, subject to change

```
RepeaterHealthText::= PrintableString (SIZE (0..255))


RxState ::= ENUMERATED {
    current          (0),
    expired          (1),
    defaulted        (2),
    initialize       (3),
    lacpDisabled     (4),
    portDisabled     (5)
    }


SectionStatus ::= BIT STRING (SIZE (2))


SESThreshold ::= INTEGER (0..2^32-1)


TrueFalse::= BOOLEAN


TypeList::= SEQUENCE OF TypeValue


TypeValue::= ENUMERATED {
    global           (0),    --undefined
    other            (1),    --undefined
    unknown          (2),    --initializing, true state not yet known
    AUI              (7),    --no internal MAU, view from AUI
    2BASE-TL         (63),   --Voice grade UTP PHY as specified in Clause 61 and 63
    10BASE5          (8),    --Thick coax MAU as specified in Clause 8
    FOIRL            (9),    --FOIRL MAU as specified in 9.9
    10BASE2          (10),   --Thin coax MAU as specified in Clause 10
    10BROAD36        (11),   --Broadband DTE MAU as specified in Clause 11
    10BASE-T         (14),   --UTP MAU as specified in Clause 14, duplex mode
                               unknown
    10BASE-THD       (141),  --UTP MAU as specified in Clause 14, half duplex mode
    10BASE-TFD       (142),  --UTP MAU as specified in Clause 14, full duplex mode
    10PASS-TS        (62),   --Voice grade UTP PHY as specified in Clause 61 and 62
    10BASE-FP        (16),   --Passive fiber MAU as specified in Clause 16
    10BASE-FB        (17),   --Synchronous fiber MAU as specified in Clause 17
    10BASE-FL        (18),   --Asynchronous fiber MAU as specified in Clause 18, duplex
                               mode unknown
    10BASE-FLHD      (181),  --Asynchronous fiber MAU as specified in Clause 18, half
                               duplex mode
    10BASE-FLFD      (182),  --Asynchronous fiber MAU as specified in Clause 18, full
                               duplex mode
    100BASE-T4       (23),   --Four-pair Category 3 UTP as specified in Clause 23
    100BASE-TX       (25),   --Two-pair Category 5 UTP as specified in Clause 25, duplex
                               mode unknown
    100BASE-TXHD     (251),  --Two-pair Category 5 UTP as specified in Clause 25, half
                             duplex mode
    100BASE-TXFD     (252),  --Two-pair Category 5 UTP as specified in Clause 25, full
```

Copyright © 2005 IEEE. All rights reserved.
This is an unapproved draft, subject to change

```
                                        duplex mode
100BASE-BX10D     (581),   --One-fiber OLT PHY as specified in Clause 58
100BASE-BX10U     (582),   --One-fiber ONU PHY as specified in Clause 58
100BASE-FX        (26),    --X fiber over PMD as specified in Clause 26, duplex mode
                             unknown
100BASE-FXHD      (261),   --X fiber over PMD as specified in Clause 26, half duplex mode
100BASE-FXFD      (262),   --X fiber over PMD as specified in Clause 26, full duplex mode
100BASE-LX10      (58),    --Two-fiber PHY as specified in Clause 58
100BASE-T2        (32),    --Two-pair Category 3 UTP as specified in Clause 32, duplex
                             mode unknown
100BASE-T2HD      (321),   --Two-pair Category 3 UTP as specified in Clause 32, half
                             duplex mode
100BASE-T2FD      (322),   --Two-pair Category 3 UTP as specified in Clause 32, full
                             duplex mode
1000BASE-X        (36),    --X PCS/PMA as specified in Clause 36 over unknown PMD,
                           duplex mode unknown
1000BASE-BX10D    (591),   --One-fiber OLT PHY as specified in Clause 59
1000BASE-BX10U    (592),   --One-fiber ONU PHY as specified in Clause 59
1000BASE-XHD      (361),   --X PCS/PMA as specified in Clause 36 over unknown PMD,
                           half duplex mode
1000BASE-XFD      (362),   --X PCS/PMA as specified in Clause 36 over unknown PMD,
                            full duplex mode
1000BASE-LX       (381),   --X fiber over long-wavelength laser PMD as specified in
                           Clause 38, duplex mode unknown
1000BASE-LXHD     (382),   --X fiber over long-wavelength laser PMD as specified in
                           Clause 38, half duplex mode
1000BASE-LXFD     (383),   --X fiber over long-wavelength laser PMD as specified in
                           Clause 38, full duplex mode
1000BASE-LX10     (59),    --Two-fiber 10 km PHY as specified in Clause 59
1000BASE-PX10D    (601),   --One-fiber OMP OLT 10 km PHY as specified in
                             Clause 60
1000BASE-PX10U    (602),   --One-fiber OMP ONU 10 km PHY as specified in
                             Clause 60
1000BASE-PX20D    (603),   --One-fiber OMP OLT 20 km PHY as specified in
                             Clause 60
1000BASE-PX20U    (604),   --One-fiber OMP ONU 20 km PHY as specified in
                             Clause 60
1000BASE-SX       (384),   --X fiber over short-wavelength laser PMD as specified in
                           Clause 38, duplex mode unknown
1000BASE-SXHD     (385),   --X fiber over short-wavelength laser PMD as specified in
                           Clause 38, half duplex mode
1000BASE-SXFD     (386),   --X fiber over short-wavelength laser PMD as specified in
                           Clause 38, full duplex mode
1000BASE-CX       (39),    --X copper over 150-Ohm balanced cable PMD as specified in
                           Clause 39, duplex mode unknown
1000BASE-CXHD     (391),   --X copper over 150-Ohm balanced cable PMD as specified in
                           Clause 39, half duplex mode
1000BASE-CXFD     (392),   --X copper over 150-Ohm balanced cable PMD as specified in
                           Clause 39, full duplex mode
1000BASE-T        (40),    --Four-pair Category 5 UTP PHY as specified in Clause 40,
                           duplex mode unknown
1000BASE-THD      (401),   --Four-pair Category 5 UTP PHY as specified in Clause 40,
                           half duplex mode
```


Copyright © 2005 IEEE. All rights reserved.
This is an unapproved draft, subject to change

```
    1000BASE-TFD      (402),  --Four-pair Category 5 UTP PHY as specified in Clause 40,
                                full duplex mode
    10GBASE-X         (48),   --X PCS/PMA as specified in Clause 48 over undefined PMD
    10GBASE-LX4       (481),  --X fibre over WWDM optics as specified in Clause 53
    10GBASE-CX4       (482),  --X copper over 8 pair 100-Ohm balanced cable as specified in
                                Clause 54
    10GBASE-R         (49),   --R PCS/PMA as specified in Clause 49 over undefined PMD
    10GBASE-ER        (491),  --R fibre over 1550nm optics as specified in Clause 52
    10GBASE-LR        (492),  --R fibre over 1310nm optics as specified in Clause 52
    10GBASE-SR        (493),  --R fibre over 850nm optics as specified in Clause 52
    10GBASE-W         (50),   --W PCS/PMA as specified in Clauses 49 and 50 over
                                  undefined PMD
    10GBASE-EW        (501),  --W fibre over 1550nm optics as specified in Clause 52
    10GBASE-LW        (502),  --W fibre over 1310nm optics as specified in Clause 52
    10GBASE-SW        (503),  --W fibre over 850nm optics as specified in Clause 52
    10GBASE-T         (55),   --Four-pair twisted-pair balanced copper cabling PHY as
                                specified in Clause 55
    802.9a            (99)    --Integrated services MAU as specified in IEEE Std 802.9
                                  ISLAN-16T
    }
END
```

Copyright © 2005 IEEE. All rights reserved.
This is an unapproved draft, subject to change

Copyright © 2005 IEEE. All rights reserved.
This is an unapproved draft, subject to change

Revisions to IEEE P802.3REVam, Clause 44

EDITORIAL NOTES - This revision is based on the current edition of IEEE P802.3REVam. The editing instructions define how to merge the material contained here into this base document set to form the new comprehensive standard as created by the addition of P802.3an.

Editing instructions are shown in ***bold italic***. Three editing instructions are used: change, delete, and insert. ***Change*** is used to make small corrections in existing text or tables. The editing instruction specifies the location of the change and describes what is being changed either by using ~~strikethrough~~ (to remove old material) or underscore (to add new material). ***Delete*** removes existing material. ***Insert*** adds new material without disturbing the existing material. Insertions may require renumbering. If so, renumbering instructions are given in the editing instruction. Editorial notes will not be carried over into future editions.

Change the SECTION FOUR title to include Clause 55:

SECTION FOUR: This section includes Clause 44 through Clause ~~54~~55 and Annex 44A through Annex ~~50~~55A.

44. Introduction to 10 Gb/s baseband network

44.1 Overview

44.1.1 Scope

Change the first paragraph of 44.1.1 to read:

10 Gigabit Ethernet uses the IEEE 802.3 MAC sublayer, connected through a 10 Gigabit Media Independent Interface (XGMII) to Physical Layer entities such as 10GBASE-SR, 10GBASE-LX4, 10GBASE-CX4, 10GBASE-LR, 10GBASE-ER, 10GBASE-SW, 10GBASE-LW, ~~and~~ 10GBASE-EW, and 10GBASE-T.

10 Gigabit Ethernet extends the IEEE 802.3 MAC beyond 1000 Mb/s to 10 Gb/s. The bit rate is faster and the bit times are shorter—both in proportion to the change in bandwidth. The minimum packet transmission time has been reduced by a factor of ten. A rate control mode (see 4.2.3.2.2) is added to the MAC to adapt the average MAC data rate to the SONET/SDH data rate for WAN-compatible applications of this standard. Achievable topologies for 10 Gb/s operation are comparable to those found in 1000BASE-X full duplex mode and equivalent to those found in WAN applications.

10 Gigabit Ethernet is defined for full duplex mode of operation only.

44.1.2 Objectives

Insert new objective g) and shift existing objective g) to h):

The following are the objectives of 10 Gigabit Ethernet:

a) Support the full duplex Ethernet MAC.
b) Provide 10 Gb/s data rate at the XGMII.
c) Support LAN PMDs operating at 10 Gb/s, and WAN PMDs operating at SONET STS-192c/SDH VC-4-64c rate.
d) Support cable plants using optical fiber compliant with ISO/IEC 11801: 1995.
e) Allow for a nominal network extent of up to 40 km.
f) Support operation over a twinaxial cable assembly for wiring closet and data center applications.

Copyright © 2005 IEEE. All rights reserved.
This is an unapproved draft, subject to change

g) Support operation over selected copper medium from ISO/IEC 11801:2002.
h) Support a BER objective of 10^{-12}.

44.1.3 Relationship of 10 Gigabit Ethernet to the ISO OSI reference model

Change Figure 44-1 to include 10GBASE-T:

10 Gigabit Ethernet couples the IEEE 802.3 (CSMA/CD) MAC to a family of 10 Gb/s Physical Layers. The relationships among 10 Gigabit Ethernet, the IEEE 802.3 (CSMA/CD) MAC, and the ISO Open System Interconnection (OSI) reference model are shown in Figure 44–1.

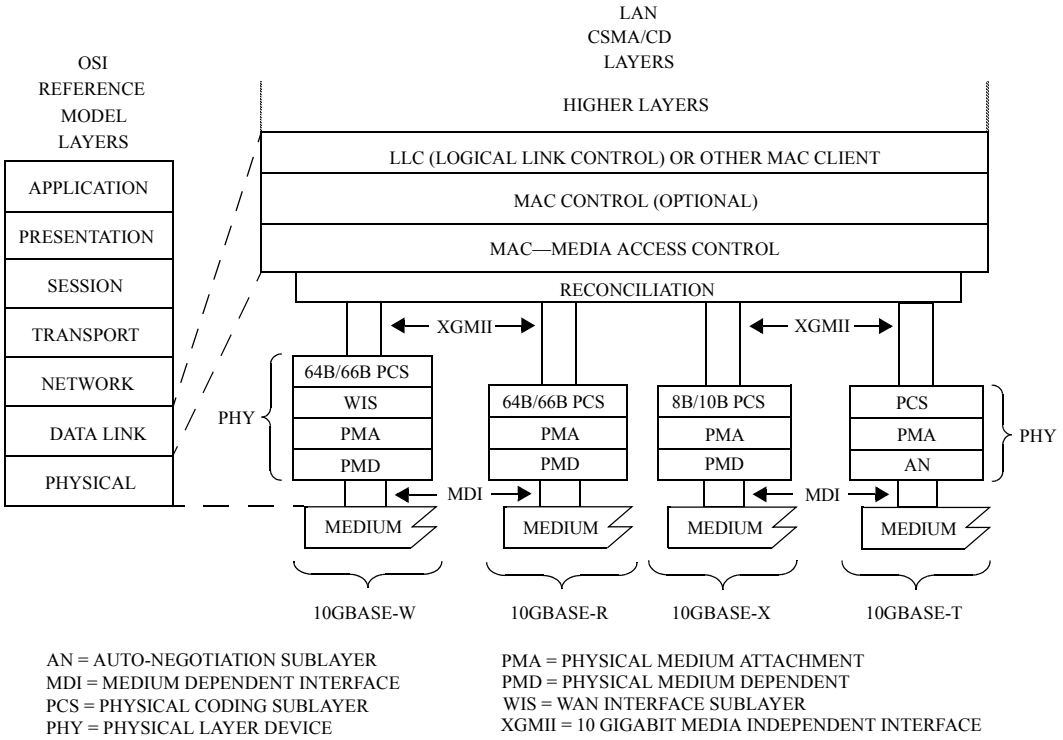

Figure 44–1—Architectural positioning of 10 Gigabit Ethernet

Insert reference to Clause 55 for 10GBASE-T in bullet d):

It is important to note that, while this specification defines interfaces in terms of bits, octets, and frames, implementations may choose other data-path widths for implementation convenience. The only exceptions are as follows:

a) The XGMII, which, when implemented at an observable interconnection port, uses a four octet-wide data path as specified in Clause 46.
b) The management interface, which, when physically implemented as the MDIO/MDC (Management Data Input/Output and Management Data Clock) at an observable interconnection port, uses a bit-wide data path as specified in Clause 45.
c) The PMA Service Interface, which, when physically implemented as the XSBI (10 Gigabit Sixteen Bit Interface) at an observable interconnection port, uses a 16-bit-wide data path as specified in Clause 51.
d) The MDI as specified in Clause 53 for 10GBASE-LX4, in Clause 54 for 10GBASE-CX4, in Clause 55 for 10GBASE-T and in Clause 52 for other PMD types.

Copyright © 2005 IEEE. All rights reserved.
This is an unapproved draft, subject to change

44.1.4 Summary of 10 Gigabit Ethernet sublayers

44.1.4.1 Reconciliation Sublayer (RS) and 10 Gigabit Media Independent Interface (XGMII)

The 10 Gigabit Media Independent Interface (Clause 46) provides an interconnection between the Media Access Control (MAC) sublayer and Physical Layer entities (PHY). This XGMII supports 10 Gb/s operation through its 32-bit-wide transmit and receive data paths. The Reconciliation Sublayer provides a mapping between the signals provided at the XGMII and the MAC/PLS service definition.

Change to add reference to Clause 55:

While the XGMII is an optional interface, it is used extensively in this standard as a basis for functional specification and provides a common service interface for Clauses 47, 48, ~~and~~ 49, and 55.

44.1.4.2 XGMII Extender Sublayer (XGXS) and 10 Gigabit Attachment Unit Interface (XAUI)

The 10 Gigabit Attachment Unit Interface (Clause 47) provides an interconnection between two XGMII Extender sublayers to increase the reach of the XGMII. This XAUI supports 10 Gb/s operation through its four-lane, differential-pair transmit and receive paths. The XGXS provides a mapping between the signals provided at the XGMII and the XAUI.

44.1.4.3 Management interface (MDIO/MDC)

The MDIO/MDC management interface (Clause 45) provides an interconnection between MDIO Manageable Devices (MMD) and Station Management (STA) entities.

44.1.4.4 Physical Layer signaling systems

Insert 10GBASE-T into Table 44-1:

This standard specifies a family of Physical Layer implementations. The generic term 10 Gigabit Ethernet refers to any use of the 10 Gb/s IEEE 802.3 MAC (the 10 Gigabit Ethernet MAC) coupled with any IEEE 802.3 10GBASE physical layer implementation. Table 44–1 specifies the correlation between nomenclature and clauses. Implementations conforming to one or more nomenclatures shall meet the requirements of the corresponding clauses.

The term 10GBASE-X, specified in Clause 48, Clause 53, and Clause 54, refers to a specific family of physical layer implementations based upon 8B/10B data coding method. The 10GBASE-X family of physical layer implementations is composed of 10GBASE-LX4 and 10GBASE-CX4.

The term 10GBASE-R, specified in Clauses 49, 51, and 52, refers to a specific family of physical layer implementations based upon 64B/66B data coding method. The 10GBASE-R family of physical layer implementations is composed of 10GBASE-SR, 10GBASE-LR, and 10GBASE-ER.

The term 10GBASE-W, specified in Clause 49 to Clause 52, refers to a specific family of physical layer implementations based upon STS-192c/SDH VC-4-64c encapsulation of 64B/66B encoded data. The 10GBASE-W family of physical layer standards has been adapted from the ANSI T1.416-1999 (SONET STS-192c/SDH VC-4-64c) physical layer specifications. The 10GBASE-W family of physical layer implementations is composed of 10GBASE-SW, 10GBASE-LW, and 10GBASE-EW.

All 10GBASE-R and 10GBASE-W PHY devices share a common PCS specification (see Clause 49). The 10GBASE-W PHY devices also require the use of the WAN Interface Sublayer, (WIS) (Clause 50).

Copyright © 2005 IEEE. All rights reserved.
This is an unapproved draft, subject to change

Table 44–1—Nomenclature and clause correlation

Nomenclature	Clause									
	48	49	50	51	52			53	54	55
	8B/10B PCS & PMA	64B/66B PCS	WIS	Serial PMA	850 nm Serial PMD	1310 nm Serial PMD	1550 nm Serial PMD	1310 nm WDM PMD	4-Lane electrical PMD	Twisted-pair PCS & PMA
10GBASE-SR		M[a]		M	M					
10GBASE-SW		M	M	M	M					
10GBASE-LX4	M							M		
10GBASE-CX4	M								M	
10GBASE-LR		M		M		M				
10GBASE-LW		M	M	M		M				
10GBASE-ER		M		M			M			
10GBASE-EW		M	M	M			M			
10GBASE-T										M

[a]M = Mandatory

Insert text for 10GBASE-T:

The term 10GBASE-T, specified in Clause 55, refers to a specific physical layer implementation based upon 64B/65B data coding placed in a low density parity check (LDPC) frame which is mapped to a 128 double-square (128DSQ) constellation for transmission on 4-pair, twisted-pair copper cabling.

Change last paragraph of 44.1.4.4 to include Clause 55:

Specifications of each physical layer device are contained in Clause 52 through Clause ~~54~~55 inclusive.

44.1.4.5 WAN Interface Sublayer (WIS), type 10GBASE-W

The WIS provides a 10GBASE-W device with the capability to transmit and receive IEEE 802.3 MAC frames within the payload envelope of a SONET STS-192c/SDH VC-4-64c frame.

44.1.5 Management

Managed objects, attributes, and actions are defined for all 10 Gigabit Ethernet components. Clause 30 consolidates all IEEE 802.3 management specifications so that 10/100/1000 Mb/s and 10 Gb/s agents can be managed by existing network management stations with little or no modification to the agent code.

44.2 State diagrams

State machine diagrams take precedence over text.

The conventions of 1.2 are adopted, along with the extensions listed in 21.5.

Copyright © 2005 IEEE. All rights reserved.
This is an unapproved draft, subject to change

44.3 Delay constraints

Insert entry into Table 44-2 for 10GBASE-T round trip delays:

Predictable operation of the MAC Control PAUSE operation (Clause 31, Annex 31B) demands that there be an upper bound on the propagation delays through the network. This implies that MAC, MAC Control sublayer, and PHY implementers must conform to certain delay maxima, and that network planners and administrators conform to constraints regarding the cable topology and concatenation of devices. Table 44–2 contains the values of maximum sublayer round-trip (sum of transmit and receive) delay in bit time as specified in 1.4 and pause_quanta as specified in 31B.2.

Table 44–2—Round-trip delay constraints (informative)

Sublayer	Maximum (bit time)	Maximum (pause_quanta)	Notes
MAC, RS and MAC Control	8192	16	See 46.1.4.
XGXS and XAUI	4096	8	Round-trip of 2 XGXS and trace for both directions. See 47.2.2.
10GBASE-X PCS and PMA	2048	4	See 48.5.
10GBASE-R PCS	3584	7	See 49.2.15.
10GBASE-T PCS and PMA	TBD	TBD	See 55.11.
WIS	14336	28	See 50.3.7.
LX4 PMD	512	1	Includes 2 meters of fiber. See 53.2.
CX4 PMD	512	1	See 54.3
Serial PMA and PMD	512	1	Includes 2 meters of fiber. See 52.2.

Equation (44–1) specifies the calculation of bit time per meter of fiber or electrical cable based upon the parameter n, which represents the ratio of the speed of electromagnetic propagation in the fiber or electrical cable to the speed of light in a vacuum. The value of n should be available from the fiber or electrical cable manufacturer, but if no value is known then a conservative delay estimate can be calculated using a default value of $n = 0.66$. The speed of light in a vacuum is $c = 3 \times 10^8$ m/s. Table 44–3 can be used to convert fiber or electrical cable delay values specified relative to the speed of light or in nanoseconds per meter.

$$\text{cable delay} = \frac{10^{10}}{nc}\ \text{BT/m} \qquad (44\text{–}1)$$

44.4 Protocol Implementation Conformance Statement (PICS) proforma

Change reference to be Clause 55:

The supplier of a protocol implementation that is claimed to conform to any part of IEEE 802.3, Clause 45 through Clause ~~54~~55, demonstrates compliance by completing a Protocol Implementation Conformance Statement (PICS) proforma.

Copyright © 2005 IEEE. All rights reserved.
This is an unapproved draft, subject to change

Table 44–3—Conversion table for cable delays

Speed relative to c	ns/m	BT/m
0.40	8.33	83.3
0.50	6.67	66.7
0.51	6.54	65.4
0.52	6.41	64.1
0.53	6.29	62.9
0.54	6.17	61.7
0.55	6.06	60.6
0.56	5.95	59.5
0.57	5.85	58.5
0.58	5.75	57.5
0.5852	5.70	57.0
0.59	5.65	56.5
0.60	5.56	55.6
0.61	5.46	54.6
0.62	5.38	53.8
0.63	5.29	52.9
0.64	5.21	52.1
0.65	5.13	51.3
0.654	5.10	51.0
0.66	5.05	50.5
0.666	5.01	50.1
0.67	4.98	49.8
0.68	4.90	49.0
0.69	4.83	48.3
0.7	4.76	47.6
0.8	4.17	41.7
0.9	3.70	37.0

Copyright © 2005 IEEE. All rights reserved.
This is an unapproved draft, subject to change

A completed PICS proforma is the PICS for the implementation in question. The PICS is a statement of which capabilities and options of the protocol have been implemented. A PICS is included at the end of each clause as appropriate. Each of the 10 Gigabit Ethernet PICS conforms to the same notation and conventions used in 100BASE-T (see 21.6).

44.5 Relation of 10 Gigabit Ethernet to other standards

Suitable entries for Table G1 of ISO/IEC 11801: 1995, Annex G, would be as follows:

a) Within the section Optical Link:
CSMA/CD 10GBASE-SR ISO/IEC 8802-3/ PDAM 26

b) Within the section Optical Link:
CSMA/CD 10GBASE-SW ISO/IEC 8802-3/PDAM 26

c) Within the section Optical Link:
CSMA/CD 10GBASE-LR ISO/IEC 8802-3/PDAM 26

d) Within the section Optical Link:
CSMA/CD 10GBASE-LW ISO/IEC 8802-3/PDAM 26

e) Within the section Optical Link:
CSMA/CD 10GBASE-ER ISO/IEC 8802-3/PDAM 26

f) Within the section Optical Link:
CSMA/CD 10GBASE-EW ISO/IEC 8802-3/PDAM 26

g) Within the section Optical Link:
CSMA/CD 10GBASE-LX4 ISO/IEC 8802-3/PDAM 26

A suitable entry for Table G5 of ISO/IEC 11801: 1995, Annex G, is exemplified in Table 44–4.

Table 44–4—Table G5 of ISO/IEC 11801: 1995

	Fibre per Clauses 5, 7, and 8			Optical link per Clause 8								
				Horizontal			Building backbone			Campus backbone		
	62.5/125 μm MMF	50/125 μm MMF	10/125 μm SMF	62.5/125 μm MMF	50/125 μm MMF	10/125 μm SMF	62.5/125 μm MMF	50/125 μm MMF	10/125 μm SMF	62.5/125 μm MMF	50/125 μm MMF	10/125 μm SMF
8802-3: 10GBASE-SR	I	I		I	N		I	I		I	I	
8802-3: 10GBASE-SW	I	I		I	N		I	I		I	I	
8802-3: 10GBASE-LR	I	I	I	I	I	N	I	I	N	I	I	N
8802-3: 10GBASE-LW	I	I	I	I	I	N	I	I	N	I	I	N
8802-3: 10GBASE-ER			I			N			N			N
8802-3: 10GBASE-EW			I			N			N			N
8802-3: 10GBASE-LX4	I	I	I	N	N	N	N	N	N	N	N	N
NOTE—"N" denotes normative support of the media in the standard. "I" denotes that there is information in the International Standard regarding operation on this media.												

Copyright © 2005 IEEE. All rights reserved.
This is an unapproved draft, subject to change

Copyright © 2005 IEEE. All rights reserved.
This is an unapproved draft, subject to change

Revisions to ANSI/IEEE Std 802.3, 2002, Clause 45

EDITORIAL NOTES - This supplement is based on the current edition of IEEE Std 802.3, 2002. The editing instructions define how to merge the material contained here into this base document set to form the new comprehensive standard as created by the addition of P802.3an.

Editing instructions are shown in ***bold italic***. Three editing instructions are used: change, delete, and insert. ***Change*** is used to make small corrections in existing text or tables. The editing instruction specifies the location of the change and describes what is being changed either by using ~~strikethrough~~ (to remove old material) or underscore (to add new material). ***Delete*** removes existing material. ***Insert*** adds new material without disturbing the existing material. Insertions may require renumbering. If so, renumbering instructions are given in the editing instruction. Editorial notes will not be carried over into future editions

Editors' Notes: *To be removed prior to final publication.*

References:
None.

Definitions:
None.

Abbreviations:
None.

Revision History:

Draft 1.2, December 2004	Third draft for IEEE P802.3an Task Force review.
Draft 1.3, January 2005	Fourth draft for IEEE P802.3an Task Force review.
Draft 1.3, February 2005	Fifth draft for IEEE P802.3an Task Force review.

Copyright © 2005 IEEE. All rights reserved.
This is an unapproved draft, subject to change

45. Management Data Input/Output (MDIO) Interface

45.2 MDIO Interface Registers

Insert Device address 7, MMD name Auto-negotiation into Table 45-1.

Table 45–1—MDIO Manageable Device addresses

Device address	MMD name
0	Reserved
1	PMA/PMD
2	WIS
3	PCS
4	PHY XS
5	DTE XS
6	TC
7	Auto-negotiation
~~7~~8 through 28	Reserved
29	Clause 22 extension
30	Vendor specific 1
31	Vendor specific 2

Each MMD contains registers 5 and 6, as defined in Table 45–2. Bits read as a one in this register indicate which MMDs are instantiated within the same package as the MMD being accessed. Bit 5.0 is used to indicate that Clause 22 functionality has been implemented within a Clause 45 electrical interface device. Bit 6.13 indicates that Clause 22 functionality is extended using the Clause 45 electrical interface through MMD 29. The definition of the term package is vendor specific and could be a chip, module, or other similar entity.

Copyright © 2005 IEEE. All rights reserved.
This is an unapproved draft, subject to change

Insert Auto-negotiation MMD into Devices in package register.

Table 45–2— Devices in package registers bit definitions

Bit(s)[a]	Name	Description	R/W[b]
m.6.15	Vendor specific device 2 present	1 = Vendor specific device 2 present in package 0 = Vendor specific device 2 not present in package	RO
m.6.14	Vendor specific device 1 present	1 = Vendor specific device 1 present in package 0 = Vendor specific device 1 not present in package	RO
m.6.13	Clause 22 extension present	1 = Clause 22 extension present in package 0 = Clause 22 extension not present in package	RO
m.6.12:0	Reserved	Ignore on read	RO
m.5.15:8~~7~~	Reserved	Ignore on read	RO
m.5.7	Auto-negotiation present	1 = Auto-negotiation present in package 0 = Auto-negotiation not present in package	RO
m.5.6	TC present	1 = TC present in package 0 = TC not present in package	RO
m.5.5	DTE XS present	1 = DTE XS present in package 0 = DTE XS not present in package	RO
m.5.4	PHY XS present	1 = PHY XS present in package 0 = PHY XS not present in package	RO
m.5.3	PCS present	1 = PCS present in package 0 = PCS not present in package	RO
m.5.2	WIS present	1 = WIS present in package 0 = WIS not present in package	RO
m.5.1	PMD/PMA present	1 = PMA/PMD present in package 0 = PMA/PMD not present in package	RO
m.5.0	Clause 22 registers present	1 = Clause 22 registers present in package 0 = Clause 22 registers not present in package	RO

[a]m = address of MMD accessed (see Table 45–1)
[b]RO = Read Only

45.2.1 PMA/PMD registers

The assignment of registers in the PMA/PMD is shown in Table 45–3.

Insert registers 1.129 through 1.131. Renumber reserved registers to end with 1.128 and restart with 1.132.

45.2.1.6 10G PMA/PMD control 2 register (Register 1.7)

The assignment of bits in the 10G PMA/PMD control 2 register is shown in Table 45–8.

Copyright © 2005 IEEE. All rights reserved.
This is an unapproved draft, subject to change

Table 45–3—PMA/PMD registers

Register address	Register name
1.0	PMA/PMD control 1
1.1	PMA/PMD status 1
1.2, 1.3	PMA/PMD device identifier
1.4	PMA/PMD speed ability
1.5, 1.6	PMA/PMD devices in package
1.7	10G PMA/PMD control 2
1.8	10G PMA/PMD status 2
1.9	10G PMD transmit disable
1.10	10G PMD receive signal detect
1.11	10G PMA/PMD extended ability register
1.12, 1.13	Reserved
1.14, 1.15	PMA/PMD package identifier
1.16 through 1.29	
1.30	10P/2B PMA/PMD control
1.31	10P/2B PMA/PMD status
1.32	10P/2B link partner PMA/PMD control[a]
1.33	10P/2B link partner PMA/PMD status[a]
1.34, 1.35	Reserved
1.36	10P/2B link loss counter
1.37	10P/2B RX SNR margin
1.38	10P/2B link partner RX SNR margin[a]
1.39	10P/2B line attenuation
1.40	10P/2B link partner line attenuation[a]
1.41	10P/2B line quality thresholds
1.42	2B link partner line quality thresholds[a]
1.43	10P FEC correctable errors counter
1.44	10P FEC uncorrectable errors counter
1.45	10P link partner FEC correctable errors[a]
1.46	10P link partner FEC uncorrectable errors[a]
1.47	10P electrical length
1.48	10P link partner electrical length[a]
1.49	10P PMA/PMD general configuration[a]
1.50	10P PSD configuration[a]
1.51, 1.52	10P downstream data rate configuration[a]
1.53	10P downstream Reed-Solomon configuration[a]
1.54, 1.55	10P upstream data rate[a]
1.56	10P upstream Reed-Solomon configuration[a]

Copyright © 2005 IEEE. All rights reserved.
This is an unapproved draft, subject to change

Table 45–3—PMA/PMD registers ***(continued)***

Register address	Register name
1.57, 1.58	10P tone group
1.59, 1.60, 1.61, 1.62, 1.63	10P tone control parameters[a]
1.64	10P tone control action[a]
1.65, 1.66, 1.67	10P tone status
1.68	10P outgoing indicator bits
1.69	10P incoming indicator bits
1.70	10P cyclic extension configuration
1.71	10P attainable downstream data rate
1.72 through 1.79	Reserved
1.80	2B general parameter
1.81 through 1.88	2B PMD parameters
1.89	2B code violation errors counter
1.90	2B link partner code violation errors[a]
1.91	2B errored seconds counter
1.92	2B link partner errored seconds[a]
1.93	2B severely errored seconds counter
1.94	2B link partner severely errored seconds[a]
1.95	2B LOSW counter
1.96	2B link partner LOSW[a]
1.97	2B unavailable seconds counter
1.98	2B link partner unavailable seconds[a]
1.99	2B state defects
1.100	2B link partner state defects[a]
1.101	2B negotiated constellation
1.102 through 1.109	2B extended PMD parameters
1.110 through 1.~~32 767~~128	Reserved
1.129	10GBASE-T status
1.130	10GBASE-T THP setting
1.131	10GBASE-T TX power level setting
1.132	10GBASE-T Test mode
1.133	10GBASE-T SNR operating margin channel 0
1.134	10GBASE-T SNR operating margin channel 1
1.135	10GBASE-T SNR operating margin channel 2
1.136	10GBASE-T SNR operating margin channel 3
1.137	10GBASE-T minimum margin channel 0
1.138	10GBASE-T minimum margin channel 1
1.139	10GBASE-T minimum margin channel 2

Copyright © 2005 IEEE. All rights reserved.
This is an unapproved draft, subject to change

Table 45–3—PMA/PMD registers *(continued)*

Register address	Register name
1.140	10GBASE-T minimum margin channel 3
1.141	10GBASE-T RX signal power channel 0
1.142	10GBASE-T RX signal power channel 1
1.143	10GBASE-T RX signal power channel 2
1.144	10GBASE-T RX signal power channel 3
1.145 through 1.32 767	Reserved
1.32 768 through 1.65 535	Vendor specific

[a]Register is defined only for -O port types and is reserved for -R ports

Table 45–8—10G PMA/PMD control 2 register bit definitions

Bit(s)	Name	Description	R/W[a]
1.7.15:4~~3~~	Reserved	Value always 0, writes ignored	R/W
1.7.~~2~~3:0	PMA/PMD type selection	3 2 1 0 1 1 X X = Reserved 1 0 1 X = Reserved 1 0 0 1 = 10GBASE-T PMA/PMD type 1 0 0 0 = Reserved 0 1 1 1 = 10GBASE-SR PMA/PMD type 0 1 1 0 = 10GBASE-LR PMA/PMD type 0 1 0 1 = 10GBASE-ER PMA/PMD type 0 1 0 0 = 10GBASE-LX4 PMA/PMD type 0 0 1 1 = 10GBASE-SW PMA/PMD type 0 0 1 0 = 10GBASE-LW PMA/PMD type 0 0 0 1 = 10GBASE-EW PMA/PMD type 0 0 0 0 = 10GBASE-CX4 PMA/PMD type	R/W

[a]R/W = Read/Write

45.2.1.6.1 PMA/PMD type selection (1.7.2:0)

The PMA/PMD type of the 10G PMA/PMD shall be selected using bits ~~2~~ 3 through 0. The PMA/PMD type abilities of the 10G PMA/PMD are advertised in bits 9 and 7 through 0 of the 10G PMA/PMD status 2 register and bit 0 of the 10G PMA/PMD extended ability register. A 10G PMA/PMD shall ignore writes to the PMA/PMD type selection bits that select PMA/PMD types it has not advertised in the status 2 register. It is the responsibility of the STA entity to ensure that mutually acceptable MMD types are applied consistently across all the MMDs on a particular PHY.

The PMA/PMD type selection defaults to a supported ability.

Copyright © 2005 IEEE. All rights reserved.
This is an unapproved draft, subject to change

45.2.1.7 10G PMA/PMD status 2 register (Register 1.8)

45.2.1.7.4 Transmit fault (1.8.11)

Insert reference to Clause 55 for definition of transmit fault.

When read as a one, bit 1.8.11 indicates that the PMA/PMD has detected a fault condition on the transmit path. When read as a zero, bit 1.8.11 indicates that the PMA/PMD has not detected a fault condition on the transmit path. Detection of a fault condition on the transmit path is optional and the ability to detect such a condition is advertised by bit 1.8.13. A PMA/PMD that is unable to detect a fault condition on the transmit path shall return a value of zero for this bit. The description of the transmit fault function for serial PMDs is given in 52.4.8. The description of the transmit fault function for WWDM PMDs is given in 53.4.10. The description of the transmit fault function for the 10GBASE-CX4 PMD is given in 54.5.10. The description of the transmit fault function for 10GBASE-T PMA is given in 55.4.2.2. The transmit fault bit shall be implemented with latching high behavior.

The default value of bit 1.8.11 is zero.

45.2.1.7.5 Receive fault (1.8.10)

Insert reference to Clause 55 for definition of receive fault.

When read as a one, bit 1.8.10 indicates that the PMA/PMD has detected a fault condition on the receive path. When read as a zero, bit 1.8.10 indicates that the PMA/PMD has not detected a fault condition on the receive path. Detection of a fault condition on the receive path is optional and the ability to detect such a condition is advertised by bit 1.8.12. A PMA/PMD that is unable to detect a fault condition on the receive path shall return a value of zero for this bit. The description of the receive fault function for serial PMDs is given in 52.4.9. The description of the receive fault function for WWDM PMDs is given in 53.4.11. The description of the receive fault function for the 10GBASE-CX4 PMD is given in 54.5.11. The description of the receive fault function for 10GBASE-T PMA is given in 55.4.2.3. The receive fault bit shall be implemented with latching high behavior.

The default value of bit 1.8.10 is zero.

45.2.1.8 10G PMD transmit disable register (Register 1.9)

Change transmit disable function description by deleting "four lane electrical" to be more specific "10GBASE-CX4".

The assignment of bits in the 10G PMD transmit disable register is shown in Table 45–10. The transmit disable functionality is optional and a PMD's ability to perform the transmit disable functionality is advertised in the PMD transmit disable ability bit 1.8.8. A PMD that does not implement the transmit disable functionality shall ignore writes to the 10G PMD transmit disable register and may return a value of zero for all bits. A PMD device that operates using a single wavelength and has implemented the transmit disable function shall use bit 1.9.0 to control the function. Such devices shall ignore writes to bits 1.9.4:1 and return a value of zero for those bits when they are read. The transmit disable function for serial PMDs is described in 52.4.7. The transmit disable function for wide wavelength division multiplexing (WWDM) PMDs is described in 53.4.7. The transmit disable function for the 10GBASE-CX4 ~~four-lane electrical~~ PMDs is described in 54.5.6.

Editors Comment: What do we want to do with transmit disable? Currently not defined in Clause 55.

Copyright © 2005 IEEE. All rights reserved.
This is an unapproved draft, subject to change

45.2.1.10 10G PMA/PMD extended ability register (Register 1.11)

Change table by renumbering column 1 row 2 from "1" to "2" and inserting row 3 with associated text.

The assignment of bits in the 10G PMA/PMD extended ability register is shown in Table 45–12. All of the bits in the 10G PMA/PMD extended ability register are read only; a write to the 10G PMA/PMD extended ability register shall have no effect.

Table 45–12—10G PMA/PMD Extended Ability register bit definitions

Bit(s)	Name	Description	R/W[a]
1.11.15:3~~1~~	Reserved	Ignore on read	RO
1.11.2	10GBASE-T ability	1 = PMA/PMD is able to perform 10GBASE-T 0 = PMA/PMD is not able to perform 10GBASE-T	RO
1.11.1	Reserved	Ignore on read	RO
1.11.0	10GBASE-CX4 ability	1 = PMA/PMD is able to perform 10GBASE-CX4 0 = PMA/PMD is not able to perform 10GBASE-CX4	RO

[a]RO = Read Only

Insert paragraphs 45.2.1.10.1 and 45.2.1.10.2

45.2.1.10.1 10GBASE-T ability (1.11.2)

When read as a one, bit 1.11.2 indicates that the PMA/PMD is able to support a 10GBASE-T PMA/PMD type. When read as a zero, bit 1.11.2 indicates that the PMA/PMD is not able to support a 10GBASE-T PMA/PMD type.

Editors note: section 45.2.1.10.2 was omitted in the original draft and while not directly part of the 802.3an working group was added for completeness and consistency in style. Also note that 1.11.1 will be used by 10GBASE-LRM, 1.11.3 will be used by 10GBASE-KX4 and bit 1.11.4 will be used by 10GBASE-KR

45.2.1.10.2 10GBASE-CX4 ability (1.11.0)

When read as a one, bit 1.11.0 indicates that the PMA/PMD is able to support a 10GBASE-CX4 PMA/PMD type. When read as a zero, bit 1.11.0 indicates that the PMA/PMD is not able to support a 10GBASE-CX4 PMA/PMD type.

Insert subclauses 45.2.1.59 through 45.2.1.74. Table renumbering will be required from this point onward. Table number in 45.2.3, etc. will be based upon the existing numbering 802.3REVam/D2.0 and any amendments. This editing instruction will be updated with the proper table numbering when 802.3REVam is complete.

45.2.1.59 10GBASE-T status (Register 1.129)

The assignments of bit in the 10GBASE-T status register is shown in Table 45–49.

45.2.1.59.1 LP information valid (1.129.0)

When read as a logic one, bit 1.129.0 indicates that the startup protocol defined in 55.4.2.4 has been completed, and that the contents of bits 1.130.12:8 and 1.131.15:8 which are set during the startup protocol are

Copyright © 2005 IEEE. All rights reserved.
This is an unapproved draft, subject to change

valid. When read as a logic zero, bit 1.129.0 indicates that the startup process has not been completed, and that the contents of bits 1.130.12:8 and 1.131.15:8 which are established during the startup protocol are invalid. A 10GBASE-T PMA shall return a value of zero in bit 1.129.0 if PMA link_status=Fail.

Table 45–49—10GBASE-T status register bit definitions

Bit(s))	Name	Description	R/W[a]
1.129.15:1	Reserved	Value always 0, writes ignored	RO
1.129.0	LP information valid	1 = Link partner information is valid 0 = Link partner information is invalid	RO

[a]RO = Read Only

45.2.1.60 10GBASE-T THP setting (Register 1.130)

The THP setting register will reflect the THP setting selected during the startup process and will only be valid if bit 1.129.0 is set to one. The startup process and all THP settings are defined in 55.4.2.4 and 55.4.3.1. As described in 55.4.3.1, only one THP setting may be selected at any time. The assignment of bits for the precoder setting are shown in Table 45–50.

Table 45–50—10GBASE-T THP setting register bit definitions

Bit(s)	Name	Description	R/W[a]
1.130.15:13	Reserved	Value always 0, writes ignored	RO
1.130.12	Link Partner THP 4 setting	1 = Link partner THP setting four is selected 0 = Link partner setting four is not selected	RO
1.130.11	Link Partner THP 3 setting	1 = Link partner setting four is selected 0 = Link partner setting four is not selected	RO
1.130.10	Link Partner THP 2 setting	1 = Link partner setting four is selected 0 = Link partner setting four is not selected	RO
1.130.9	Link Partner THP 1 setting	1 = Link partner setting four is selected 0 = Link partner setting four is not selected	RO
1.130.8	Link Partner THP 0 bypass	1 = Link partner setting four is selected 0 = Link partner setting four is not selected	RO
1.130.7:5	Reserved	Value always 0, writes ignored	RO
1.130.4	THP 4 setting	1 = PMA THP setting four is selected 0 = PMA THP setting four is not selected	RO

Copyright © 2005 IEEE. All rights reserved.
This is an unapproved draft, subject to change

Table 45–50—10GBASE-T THP setting register bit definitions

Bit(s)	Name	Description	R/W[a]
1.130.3	THP 3 setting	1 = PMA THP setting four is selected 0 = PMA THP setting four is not selected	RO
1.130.2	THP 2 setting	1 = PMA THP setting four is selected 0 = PMA THP setting four is not selected	RO
1.130.1	THP 1 setting	1 = PMA THP setting four is selected 0 = PMA THP setting four is not selected	RO
1.130.0	THP 0 bypass	1 = PMA THP setting four is selected 0 = PMA THP setting four is not selected	RO

[a]RO = Read Only

45.2.1.60.1 Link partner THP 4 setting (1.130.12)

When read as a one, bit 1.130.12 indicates that the 10GBASE-T PMA link partner will operate with THP setting 4. When read as a zero, bit 1.130.12 indicates that the 10GBASE-T PMA link partner will not operate with THP setting 4.

45.2.1.60.2 Link partner THP 3 setting (1.130.11)

When read as a one, bit 1.130.11 indicates that the 10GBASE-T PMA link partner will operate with THP setting 3. When read as a zero, bit 1.130.11 indicates that the 10GBASE-T PMA link partner will not able to operate with THP setting 3.

45.2.1.60.3 Link partner THP 2 setting (1.130.10)

When read as a one, bit 1.130.10 indicates that the 10GBASE-T PMA link partner will to operate with THP setting 2. When read as a zero, bit 1.130.10 indicates that the 10GBASE-T PMA link partner will not able to operate with THP setting 2.

45.2.1.60.4 Link partner THP 1 setting (1.130.9)

When read as a one, bit 1.130.9 indicates that the 10GBASE-T PMA link partner will operate with THP setting 1. When read as a zero, bit 1.130.9 indicates that the 10GBASE-T PMA link partner will not able to operate with THP setting 1.

45.2.1.60.5 Link partner THP 0 bypass setting (1.130.8)

When read as a one, bit 1.130.8 indicates that the 10GBASE-T PMA link partner will operate in THP bypass mode. When read as a zero, bit 1.130.8 indicates that the 10GBASE-T PMA link partner will not able to operate in THP bypass mode.

45.2.1.60.6 If THP 4 setting (1.130.4)

When read as a one, bit 1.130.4 indicates that the 10GBASE-T PMA will operate with THP setting 4. When read as a zero, bit 1.130.4 indicates that the 10GBASE-T PMA will not operate with THP setting 4.

Copyright © 2005 IEEE. All rights reserved.
This is an unapproved draft, subject to change

45.2.1.60.7 THP 3 setting (1.130.3)

When read as a one, bit 1.130.3 indicates that the 10GBASE-T PMA will operate with THP setting 3. When read as a zero, bit 1.130.3 indicates that the 10GBASE-T PMA will not operate with THP setting 3.

45.2.1.60.8 THP 2 setting (1.130.2)

When read as a one, bit 1.130.2 indicates that the 10GBASE-T PMA will operate with THP setting 2. When read as a zero, bit 1.130.2 indicates that the 10GBASE-T PMA will not operate with THP setting 2.

45.2.1.60.9 THP 1 setting (1.130.1)

When read as a one, bit 1.130.1 indicates that the 10GBASE-T PMA will operate with THP setting 1. When read as a zero, bit 1.130.1 indicates that the 10GBASE-T PMA will not operate with THP setting 1.

45.2.1.60.10 THP 0 bypass (1.130.0)

When read as a one, bit 1.130.0 indicates that the 10GBASE-T PMA will bypass THP. When read as a zero, bit 1.130.0 indicates that the 10GBASE-T PMA will not bypass THP.

45.2.1.61 10GBASE-T TX power level setting (Register 1.131)

The TX power level setting register will reflect the TX power level selected during the startup negotiation process. The startup negotiation process and all TX power level settings are defined in 55.4.2.4 and 55.4.5.1. As described in 55.4.2.4, only one TX power level setting may be selected at any time. If bit 1.129.0 is set to zero bits 1.131.15:8 will not indicate the TX power level setting of the link partner. The assignment of bits for the precoder setting are shown in Table 45–51.

45.2.1.61.1 Link partner TX power level 7 setting (1.131.15)

If bit 1.129.0 is set to one and bit 1.131.15 is set to one then bit 1.131.15 indicates that the 10GBASE-T PMA link partner has the ability to operate with TX power level setting 7. If bit 1.129.0 is set to one and bit 1.131.15 is set to zero then bit 1.131.15 indicates that the 10GBASE-T PMA link partner is not able to operate with TX power level setting 7.

45.2.1.61.2 Link partner TX power level 6 setting (1.131.14)

If bit 1.129.0 is set to one and bit 1.131.14 is set to one then bit 1.131.14 indicates that the 10GBASE-T PMA link partner has the ability to operate with TX power level setting 6. If bit 1.129.0 is set to one and bit 1.131.14 is set to zero then bit 1.131.14 indicates that the 10GBASE-T PMA link partner is not able to operate with TX power level setting 6.

45.2.1.61.3 Link partner TX power level 5 setting (1.131.13)

If bit 1.129.0 is set to one and bit 1.131.13 is set to one then bit 1.131.13 indicates that the 10GBASE-T PMA link partner has the ability to operate with TX power level setting 5. If bit 1.129.0 is set to one and bit 1.131.13 is set to zero then bit 1.131.13 indicates that the 10GBASE-T PMA link partner is not able to operate with TX power level setting 5.

45.2.1.61.4 Link partner TX power level 4 setting (1.131.12)

If bit 1.129.0 is set to one and bit 1.131.12 is set to one then bit 1.131.12 indicates that the 10GBASE-T PMA link partner has the ability to operate with TX power level setting 4. If bit 1.129.0 is set to one and bit

Copyright © 2005 IEEE. All rights reserved.
This is an unapproved draft, subject to change

Table 45–51—10GBASE-T TX power level setting register bit definitions

Bit(s))	Name	Description	R/W[a]
1.131.15	Link partner TX power level 7	1 = Link partner is operating with TX power level setting seven 0 = Link partner is not operating with TX power level setting seven	RO
1.131.14	Link partner TX power level 6	1 = Link partner is operating with TX power level setting six 0 = Link partner is not operating with TX power level setting six	RO
1.131.13	Link partner TX power level 5	1 = Link partner is operating with TX power level setting five 0 = Link partner is not operating with TX power level setting five	RO
1.131.12	Link partner TX power level 4	1 = Link partner is operating with TX power level setting four 0 = Link partner is not operating with TX power level setting four	RO
1.131.11	Link partner TX power level 3	1 = Link partner is operating with TX power level setting three 0 = Link partner is not operating with TX power level setting three	RO
1.131.10	Link partner TX power level 2	1 = Link partner is operating with TX power level setting two 0 = Link partner is not operating with TX power level setting two	RO
1.131.9	Link partner TX power level 1	1 = Link partner is operating with TX power level setting one 0 = Link partner is not operating with TX power level setting one	RO
1.131.8	Link partner TX power level 0	1 = Link partner is operating with TX power level setting 0 0 = Link partner is not operating with TX power level setting 0	RO
1.131.7	TX power level 7	1 = PMA is operating with TX power level setting seven 0 = PMA is not operating with TX power level setting seven	RO
1.131.6	TX power level 6	1 = PMA is operating with TX power level setting six 0 = PMA is not operating with TX power level setting six	RO
1.131.5	TX power level 5	1 = PMA is operating with TX power level setting five 0 = PMA is not operating with TX power level setting five	RO
1.131.4	TX power level 4	1 = PMA is operating with TX power level setting four 0 = PMA is not operating with TX power level setting four	RO
1.131.3	TX power level 3	1 = PMA is operating with TX power level setting three 0 = PMA is not operating with TX power level setting three	RO
1.131.2	TX power level 2	1 = PMA is operating with TX power level setting two 0 = PMA is not operating with TX power level setting two	RO
1.131.1	TX power level 1	1 = PMA is operating with TX power level setting one 0 = PMA is not operating with TX power level setting one	RO
1.131.0	TX power level 0	1 = PMA is operating with TX power level setting 0 0 = PMA is not operating with TX power level setting 0	RO

[a]RO = Read Only

1.131.12 is set to zero then bit 1.131.12 indicates that the 10GBASE-T PMA link partner is not able to operate with TX power level setting 4.

45.2.1.61.5 Link partner TX power level 3 setting (1.131.11)

If bit 1.129.0 is set to one and bit 1.131.11 is set to one then bit 1.131.11 indicates that the 10GBASE-T PMA link partner has the ability to operate with TX power level setting 3. If bit 1.129.0 is set to one and bit 1.131.11 is set to zero then bit 1.131.11 indicates that the 10GBASE-T PMA link partner is not able to operate with TX power level setting 3.

Copyright © 2005 IEEE. All rights reserved.
This is an unapproved draft, subject to change

45.2.1.61.6 Link partner TX power level 2 setting (1.131.10)

If bit 1.129.0 is set to one and bit 1.131.10 is set to one then bit 1.131.10 indicates that the 10GBASE-T PMA link partner has the ability to operate with TX power level setting 2. If bit 1.129.0 is set to one and bit 1.131.10 is set to zero then bit 1.131.10 indicates that the 10GBASE-T PMA link partner is not able to operate with TX power level setting 2.

45.2.1.61.7 Link partner TX power level 1 setting (1.131.9)

If bit 1.129.0 is set to one and bit 1.131.9 is set to one then bit 1.131.9 indicates that the 10GBASE-T PMA link partner has the ability to operate with TX power level setting 1. If bit 1.129.0 is set to one and bit 1.131.9 is set to zero then bit 1.131.9 indicates that the 10GBASE-T PMA link partner is not able to operate with TX power level setting 1.

45.2.1.61.8 Link partner TX power level 0 setting (1.131.8)

If bit 1.129.0 is set to one and bit 1.131.8 is set to one then bit 1.131.8 indicates that the 10GBASE-T PMA link partner has the ability to operate with TX power level 0. If bit 1.129.0 is set to one and bit 1.131.8 is set to zero then bit 1.131.8 indicates that the 10GBASE-T PMA link partner is not able to operate with TX power level 0.

45.2.1.61.9 TX power level 7 setting (1.131.7)

When read as a one, bit 1.131.7 indicates that the 10GBASE-T PMA has the ability to support TX power level setting 7. When read as a zero, bit 1.131.7 indicates that the 10GBASE-T PMA is not able to support TX power level setting 7.

45.2.1.61.10 TX power level 6 setting (1.131.6)

When read as a one, bit 1.131.6 indicates that the 10GBASE-T PMA has the ability to support TX power level setting 6. When read as a zero, bit 1.131.6 indicates that the 10GBASE-T PMA is not able to support TX power level setting 6.

45.2.1.61.11 TX power level 5 setting (1.131.5)

When read as a one, bit 1.131.5 indicates that the 10GBASE-T PMA has the ability to support TX power level setting 5. When read as a zero, bit 1.131.5 indicates that the 10GBASE-T PMA is not able to support TX power level setting 5.

45.2.1.61.12 TX power level 4 setting (1.131.4)

When read as a one, bit 1.131.4 indicates that the 10GBASE-T PMA has the ability to support TX power level setting 4. When read as a zero, bit 1.131.4 indicates that the 10GBASE-T PMA is not able to support TX power level setting 4.

45.2.1.61.13 TX power level 3 setting (1.131.3)

When read as a one, bit 1.131.3 indicates that the 10GBASE-T PMA has the ability to support TX power level setting 3. When read as a zero, bit 1.131.3 indicates that the 10GBASE-T PMA is not able to support TX power level setting 3.

Copyright © 2005 IEEE. All rights reserved.
This is an unapproved draft, subject to change

45.2.1.61.14 TX power level 2 setting (1.131.2)

When read as a one, bit 1.131.2 indicates that the 10GBASE-T PMA has the ability to support TX power level setting 2. When read as a zero, bit 1.131.2 indicates that the 10GBASE-T PMA is not able to support TX power level setting 2.

45.2.1.61.15 TX power level 1 setting (1.131.1)

When read as a one, bit 1.131.1 indicates that the 10GBASE-T PMA has the ability to support TX power level setting 1. When read as a zero, bit 1.131.1 indicates that the 10GBASE-T PMA is not able to support TX power level setting 1.

45.2.1.61.16 TX power level 0 setting (1.131.0)

When read as a one, bit 1.131.0 indicates that the 10GBASE-T PMA has the ability to support TX power level zero. When read as a zero, bit 1.131.0 indicates that the 10GBASE-T PMA is not able to support TX power level zero.

45.2.1.62 10GBASE-T Test mode register (Register 1.132)

The assignment of bits in the 10GBASE-T test mode register is shown in Table 45–52. The default values for each bit should be chosen so that the initial state of the device upon power up or reset is a normal operational state without management intervention.

Table 45–52—10GBASE-T Test mode register bit definitions

Bit(s)	Name	Description	R/W[a]
1.132.15:13	Test mode control	15 14 13 1 1 1 = Reserved 1 1 0 = Test mode 6 1 0 1 = Test mode 5 1 0 0 = Test mode 4 0 1 1 = Test mode 3 0 1 0 = Test mode 2 0 0 1 = Test mode 1 0 0 0 = Normal operation	R/W
1.132.12:10	Transmitter Test Frequencies	12 11 10 1 1 1 = Reserved 1 1 0 = Dual tone 3 1 0 1 = Dual tone 2 1 0 0 = Dual tone 1 0 1 1 = Reserved 0 1 0 = Single tone 3 0 0 1 = Single tone 2 0 0 0 = Single tone 1	R/W

[a]R/W = Read/Write

45.2.1.62.1 Test mode control (1.132.15:13)

Transmitter test mode operations defined by bits 7.9.15:13, are described in #CrossRef# 55.5.2 and #CrossRef# Table 55-3. The default value for bits 7.9.15:13 is zero.

Copyright © 2005 IEEE. All rights reserved.
This is an unapproved draft, subject to change

45.2.1.62.2 Transmitter test frequencies (1.132.12:10)

When Test mode 4 is selected by setting bits 1.132.15:13 to one, zero, zero respectively, bits 1.132.12:10 will select the transmit test frequency as shown in Table 45–52. Detailed use and operation of these transmitter test frequencies is described in 55.5.2.

45.2.1.63 SNR operating margin channel 0 register (Register 1.133)

Register 1.133 will contain the current SNR operating margin measured at the slicer input for channel 0 for the 10GBASE-T PMA. It will be reported with 0.1dB of resolution to an accuracy of 0.5dB within the range of -12.7dB to 12.7dB. 0.0dB will be represented by 0x8000. Implementation of this register is optional.

45.2.1.64 SNR operating margin channel 1 register (Register 1.134)

Register 1.134 will contain the current SNR operating margin measured at the slicer input for channel 1 for the 10GBASE-T PMA. It will be reported with 0.1dB of resolution to an accuracy of 0.5dB within the range of -12.7dB to 12.7dB. 0.0dB will be represented by 0x8000. Implementation of this register is optional.

45.2.1.65 SNR operating margin channel 2 register (Register 1.135)

Register 1.135 will contain the current SNR operating margin measured at the slicer input for channel 2 for the 10GBASE-T PMA. It will be reported with 0.1dB of resolution to an accuracy of 0.5dB within the range of -12.7dB to 12.7dB. 0.0dB will be represented by 0x8000. Implementation of this register is optional.

45.2.1.66 SNR operating margin channel 3 register (Register 1.136)

Register 1.136 will contain the current SNR operating margin measured at the slicer input for channel 3 for the 10GBASE-T PMA. It will be reported with 0.1dB of resolution to an accuracy of 0.5dB within the range of -12.7dB to 12.7dB. 0.0dB will be represented by 0x8000. Implementation of this register is optional.

45.2.1.67 Minimum margin channel 0 register (Register 1.137)

The Minimum margin channel 0 register will contain a latched copy of the lowest value observed in the SNR operating margin channel 0 register (1.133) since the last read. It will be reported with 0.1dB of resolution to an accuracy of 0.5dB within the range of -12.7dB to 12.7dB. 0.0dB will be represented by 0x8000. Implementation of this register is optional.

45.2.1.68 Minimum margin channel 1 register (Register 1.138)

The Minimum margin channel 1 register will contain a latched copy of the lowest value observed in the SNR operating margin channel 1 register (1.134) since the last read. It will be reported with 0.1dB of resolution to an accuracy of 0.5dB within the range of -12.7dB to 12.7dB. 0.0dB will be represented by 0x8000. Implementation of this register is optional.

45.2.1.69 Minimum margin channel 2 register (Register 1.139)

The Minimum margin channel 2 register will contain a latched copy of the lowest value observed in the SNR operating margin channel 2 register (1.135) since the last read. It will be reported with 0.1dB of resolution to an accuracy of 0.5dB within the range of -12.7dB to 12.7dB. 0.0dB will be represented by 0x8000. Implementation of this register is optional.

Copyright © 2005 IEEE. All rights reserved.
This is an unapproved draft, subject to change

45.2.1.70 Minimum margin channel 3 register (Register 1.140)

The Minimum margin channel 3 register will contain a latched copy of the lowest value observed in the SNR operating margin channel 3 register (1.136) since the last read. It will be reported with 0.1dB of resolution to an accuracy of 0.5dB within the range of -12.7dB to 12.7dB. 0.0dB will be represented by 0x8000. Implementation of this register is optional.

45.2.1.71 RX signal power channel 0 register (Register 1.141)

The RX signal power channel 0 register is read only and will contain the receive signal power measured at the MDI during training as described in section 55. It will be reported with 0.1dB of resolution to an accuracy of 0.5dB within the range of -20dBm to 5.5dBm. 0.0dB will be represented by 0x8000. Implementation of this register is optional.

45.2.1.72 RX signal power channel 1 register (Register 1.142)

The RX signal power channel 1 register is read only and will contain the receive signal power measured at the MDI during training as described in section 55. It will be reported with 0.1dB of resolution to an accuracy of 0.5dB within the range of -20dBm to 5.5dBm. 0.0dB will be represented by 0x8000. Implementation of this register is optional.

45.2.1.73 RX signal power channel 2 register (Register 1.143)

The RX signal power channel 2 register is read only and will contain the receive signal power measured at the MDI during training as described in section 55. It will be reported with 0.1dB of resolution to an accuracy of 0.5dB within the range of -20dBm to 5.5dBm. 0.0dB will be represented by 0x8000. Implementation of this register is optional.

45.2.1.74 RX signal power channel 3 register (Register 1.144)

The RX signal power channel 3 register is read only and will contain the receive signal power measured at the MDI during training as described in section 55. It will be reported with 0.1dB of resolution to an accuracy of 0.5dB within the range of -20dBm to 5.5dBm. 0.0dB will be represented by 0x8000. Implementation of this register is optional.

45.2.3 PCS registers

The assignment of registers in the PCS is shown in Table 45–66.

Change entries 3.32 and 3.33 to include 10GBASE-T.

Table 45–66—PCS registers

Register address	Register name
3.0	PCS control 1
3.1	PCS status 1
3.2, 3.3	PCS device identifier
3.4	PCS speed ability
3.5, 3.6	PCS devices in package
3.7	10G PCS control 2
3.8	10G PCS status 2

Copyright © 2005 IEEE. All rights reserved.
This is an unapproved draft, subject to change

Table 45–66—PCS registers

Register address	Register name
3.9 through 3.13	Reserved
3.14, 3.15	PCS package identifier
3.16 through 3.23	Reserved
3.24	10GBASE-X PCS status
3.25	10GBASE-X PCS test control
3.26 through 3.31	Reserved
3.32	10GBASE-R & 10GBASE-T PCS status 1
3.33	10GBASE-R & 10GBASE-T PCS status 2
3.34 through 3.37	10GBASE-R PCS test pattern seed A
3.38 through 3.41	10GBASE-R PCS test pattern seed B
3.42	10GBASE-R PCS test pattern control
3.43	10GBASE-R PCS test pattern error counter
3.44 through 3.59	Reserved
3.60	10P/2B capability
3.61	10P/2B PCS control register
3.62, 3.63	10P/2B PME available
3.64, 3.65	10P/2B PME aggregate
3.66	10P/2B PAF RX error counter
3.67	10P/2B PAF small fragment counter
3.68	10P/2B PAF large fragments counter
3.69	10P/2B PAF overflow counter
3.70	10P/2B PAF bad fragment counter
3.71	10P/2B PAF lost fragment counter
3.72	10P/2B PAF lost start of fragment counter
3.73	10P/2B PAF lost end of fragment counter
3.74 through 3.32 767	Reserved
3.32 768 through 3.65 535	Vendor specific

45.2.3.1.2 Loopback (3.0.14)

Insert 10GBASE-T information.

When the 10GBASE-T or ~~T~~the 10GBASE-R mode of operation is selected for the PCS using the PCS type selection field (3.7.1:0), the PCS shall be placed in a Loopback mode of operation when bit 3.0.14 is set to a one. When bit 3.0.14 is set to a one, the 10GBASE-R or 10GBASE-T PCS shall accept data on the transmit path and return it on the receive path. The specific behavior of the 10GBASE-R PCS during loopback is specified in 49.2. The specific behavior for the 10GBASE-T PCS during loopback is specified in 55.3.16.3. For all other port types, the PCS loopback functionality is not applicable and writes to this bit shall be ignored and reads from this bit shall return a value of zero.

The default value of bit 3.0.14 is zero.

Copyright © 2005 IEEE. All rights reserved.
This is an unapproved draft, subject to change

NOTE—The signal path through the PCS that is exercised in the Loopback mode of operation is implementation specific, but it is recommended that the signal path encompass as much of the PCS circuitry as is practical. The intention of providing this Loopback mode of operation is to permit a diagnostic or self-test function to perform the transmission and reception of a PDU, thus testing the transmit and receive data paths. Other loopback signal paths may be enabled using loopback controls within other MMDs.

45.2.3.2.2 PCS receive link status (3.1.2)

Insert information for 10GBASE-T.

When read as a one, bit 3.1.2 indicates that the PCS receive link is up. When read as a zero, bit 3.1.2 indicates that the PCS receive link is down. When a 10GBASE-R or 10GBASE-W mode of operation is selected for the PCS using the PCS type selection field (3.7.1:0), this bit is a latching low version of bit 3.32.12. When a 10GBASE-X mode of operation is selected for the PCS using the PCS type selection field (3.7.1:0), this bit is a latching low version of bit 3.24.12. When a 10GBASE-T mode of operation is selected for the PCS using the PCS type selection field (3.7.1:0), this bit is a latching low version of bit 3.32.12. The receive link status bit shall be implemented with latching low behavior.

45.2.3.6 10G PCS control 2 register (Register 3.7)

The assignment of bits in the 10G PCS control 2 register is shown in Table 45–67. The default value for each bit of the 10G PCS control 2 register should be chosen so that the initial state of the device upon power up or reset is a normal operational state without management intervention.

Insert 10GBASE-T PCS type into the following table.

Table 45–67—10G PCS control 2 register bit definitions

Bit(s)	Name	Description	R/W[a]
3.7.15:2	Reserved	Value always 0, writes ignored	R/W
3.7.1:0	PCS type selection	1 0 1 1 = Select 10GBASE-T PCS type~~Reserved~~ 1 0 = Select 10GBASE-W PCS type 0 1 = Select 10GBASE-X PCS type 0 0 = Select 10GBASE-R PCS type	R/W

[a]R/W = Read/Write

45.2.3.6.1 PCS type selection (3.7.1:0)

Change 3.8.2:0 to be 3.8.3:0 to add 10GBASE-T.

The PCS type shall be selected using bits 1 through 0. The PCS type abilities of the 10G PCS are advertised in bits 3.8.3~~2~~:0. A 10G PCS shall ignore writes to the PCS type selection bits that select PCS types it has not advertised in the status register. It is the responsibility of the STA entity to ensure that mutually acceptable MMD types are applied consistently across all the MMDs on a particular PHY. The PCS type selection defaults to a supported ability.

Copyright © 2005 IEEE. All rights reserved.
This is an unapproved draft, subject to change

45.2.3.7 10G PCS status 2 register (Register 3.8)

The assignment of bits in the 10G PCS status 2 register is shown in Table 45–68. All the bits in the 10G PCS status 2 register are read only; a write to the 10G PCS status 2 register shall have no effect.

Insert 10GBASE-T into the following table.

Table 45–68—10G PCS status 2 register bit definitions

Bit(s)	Name	Description	R/W[a]
3.8.15:14	Device present	15 14 1 0 = Device responding at this address 1 1 = No device responding at this address 0 1 = No device responding at this address 0 0 = No device responding at this address	RO
3.8.13:12	Reserved	Ignore when read	RO
3.8.11	Transmit fault	1 = Fault condition on transmit path 0 = No fault condition on transmit path	RO/LH
3.8.10	Receive fault	1 = Fault condition on the receive path 0 = No fault condition on the receive path	RO/LH
3.8.9:4~~3~~	Reserved	Ignore when read	RO
3.8.3	10GBASE-T capable	1 = PCS is able to support 10GBASE-T PCS type 0 = PCS is not able to support 10GBASE-T PCS type	RO
3.8.2	10GBASE-W capable	1 = PCS is able to support 10GBASE-W PCS type 0 = PCS is not able to support 10GBASE-W PCS type	RO
3.8.1	10GBASE-X capable	1 = PCS is able to support 10GBASE-X PCS type 0 = PCS is not able to support 10GBASE-X PCS type	RO
3.8.0	10GBASE-R capable	1 = PCS is able to support 10GBASE-R PCS types 0 = PCS is not able to support 10GBASE-R PCS types	RO

[a]RO = Read Only, LH = Latching High

Insert information for 10GBASE-T and increment numbering for corresponding subclauses.

45.2.3.7.4 10GBASE-T capable (3.8.3)

When read as a one, bit 3.8.3 indicates that the PCS is able to support the 10GBASE-T PCS type. When read as a zero, bit 3.8.3 indicates that the PCS is not able to support the 10GBASE-T PCS type

Change to add information for 10GBASE-T.

45.2.3.11 10GBASE-R & 10GBASE-T PCS status 1 register (Register 3.32)

The assignment of bits in the 10GBASE-R & 10GBASE-T PCS status 1 register is shown in Table 45–74. All the bits in the 10GBASE-R & 10GBASE-T PCS status 1 register are read only; a write to the 10GBASE-R & 10GBASE-T PCS status 1 register shall have no effect. A PCS device that does not implement

Copyright © 2005 IEEE. All rights reserved.
This is an unapproved draft, subject to change

10GBASE-R or the 10GBASE-T shall return a zero for all bits in the 10GBASE-R & 10GBASE-T PCS status 1 register. It is the responsibility of the STA management entity to ensure that a port type is supported by all MMDs before interrogating any of its status bits. The contents of register 3.32 are undefined when the 10GBASE-R PCS or the 10GBASE-T PCS is operating in seed test-pattern mode or PRBS31 test-pattern mode.

Table 45–74—10GBASE-R & 10GBASE-T PCS status 1 register bit definitions

Bit(s)	Name	Description	R/W[a]
3.32.15:13	Reserved	Ignore when read	RO
3.32.12	10GBASE-R & 10GBASE-T receive link status	1 = 10GBASE-R or 10GBASE-T PCS receive link up 0 = 10GBASE-R or 10GBASE-T PCS receive link down	RO
3.32.11:3	Reserved	Ignore when read	RO
3.32.2	PRBS31 pattern testing ability	1 = PCS is able to support PRBS31 pattern testing 0 = PCS is not able to support PRBS31 pattern testing	RO
3.32.1	10GBASE-R & 10GBASE-T PCS high BER	1 = 10GBASE-R or 10GBASE-T PCS reporting a high BER 0 = 10GBASE-R or 10GBASE-T PCS not reporting a high BER	RO
3.32.0	10GBASE-R & 10GBASE-T PCS block lock	1 = 10GBASE-R or 10GBASE-T PCS locked to received blocks 0 = 10GBASE-R or 10GBASE-T PCS not locked to received blocks	RO

[a]RO = Read Only

45.2.3.11.1 10GBASE-R & 10GBASE-T PCS receive link status (3.32.12)

When read as a one, bit 3.32.12 indicates that the PCS is in a fully operational state. When read as a zero, bit 3.32.12 indicates that the PCS is not fully operational. This bit is a reflection of the state of the PCS_status variable defined in 49.2.14.1 for 10GBASE-R and PCS_status variable defined in 55.3.16.1 for 10GBASE-T.

45.2.3.11.3 10GBASE-R & 10GBASE-T PCS high BER (3.32.1)

For 10GBASE-R, when read as a one, bit 3.32.1 indicates that the 64B/66B receiver is detecting a BER of ≥ 10^{-4}. When read as a zero, bit 3.32.1 indicates that the 64B/66B receiver is detecting a BER of < 10^{-4}. This bit is a direct reflection of the state of the hi_ber variable in the 64B/66B state machine and is defined in 49.2.13.2.2.

For 10GBASE-T, when read as a one, bit 3.32.1 indicates that the 64B/65B receiver is detecting a BER of ≥ 10^{-12}. When read as a zero, bit 3.32.1 indicates that the 64B/65B receiver is detecting a BER of < 10^{-12}. This bit is a direct reflection of the state of the hi_lfer variable in the 64B/65B state machine and is defined in 55.3.16.1.

Copyright © 2005 IEEE. All rights reserved.
This is an unapproved draft, subject to change

45.2.3.11.4 10GBASE-R &10GBASE-T PCS block lock (3.32.0)

When read as a one, bit 3.32.0 indicates that the 64B/66B receiver for 10GBASE-R or the 64B/65B receiver for the 10GBASE-T has block lock. When read as a zero, bit 3.32.0 indicates that the 64B/66B receiver for 10GBASE-R or the 64B/65B receiver for the 10GBASE-T has not got block lock. This bit is a direct reflection of the state of the block_lock variable in the 64B/66B state machine and is defined in 49.2.13.2.2 for 10GBASE-R PCS or the block_lock variable in the 64B/65B state machine defined in 55.3.16.1 for the 10GBASE-T PCS

45.2.3.12 10GBASE-R & 10GBASE-T PCS status 2 register (Register 3.33)

The assignment of bits in the 10GBASE-R & 10GBASE-T PCS status 2 register is shown in Table 45–75. All the bits in the 10GBASE-R & 10GBASE-T PCS status 2 register are read only; a write to the 10GBASE-R & 10GBASE-T PCS status 2 register shall have no effect. A PCS device which does not implement 10GBASE-R or 10GBASE-T shall return a zero for all bits in the 10GBASE-R & 10GBASE-T PCS status 2 register. It is the responsibility of the STA management entity to ensure that a port type is supported by all MMDs before interrogating any of its status bits. The contents of register 3.33 are undefined when the 10GBASE-R or the 10GBASE-T PCS is operating in seed test-pattern mode or PRBS31 test-pattern mode.

Table 45–75—10GBASE-R & 10GBASE-T PCS status 2 register bit definitions

Bit(s)	Name	Description	R/W[a]
3.33.15	Latched block lock	1 = 10GBASE-R or 10GBASE-T PCS has block lock 0 = 10GBASE-R or 10GBASE-T PCS does not have block lock	RO/LL
3.33.14	Latched high BER	1 = 10GBASE-R or 10GBASE-T PCS has reported a high BER 0 = 10GBASE-R or 10GBASE-T PCS has not reported a high BER	RO/LH
3.33.13:8	BER	BER counter	RO/NR
3.33.7:0	Errored blocks	Errored blocks counter	RO/NR

[a]RO = Read Only, LL = Latching Low, LH = Latching High, NR = Non Roll-over

45.2.3.12.1 Latched block lock (3.33.15)

When read as a one, bit 3.33.15 indicates that the 10GBASE-R or the 10GBASE-T PCS has achieved block lock. When read as a zero, bit 3.33.15 indicates that the 10GBASE-R or the 10GBASE-T PCS has lost block lock.

The latched block lock bit shall be implemented with latching low behavior.

This bit is a latching low version of the 10GBASE-R & 10GBASE-T PCS block lock status bit (3.32.0).

45.2.3.12.2 Latched high BER (3.33.14)

When read as a one, bit 3.33.14 indicates that the 10GBASE-R or the 10GBASE-T PCS has detected a high BER. When read as a zero, bit 3.33.14 indicates that the 10GBASE-R or the 10GBASE-T PCS has not detected a high BER.

Copyright © 2005 IEEE. All rights reserved.
This is an unapproved draft, subject to change

The latched high BER bit shall be implemented with latching high behavior.

This bit is a latching high version of the 10GBASE-R &10GBASE-T PCS high BER status bit (3.32.1).

45.2.3.12.3 BER(3.33.13:8)

The BER counter is a six bit count as defined by the ber_count variable in 49.2.14.2 for 10GBASE-R and defined by the lfer_count variable in 55.3.16.2 for 10GBASE-T. These bits shall be reset to all zeros when the BER count is read by the management function or upon execution of the PCS reset. These bits shall be held at all ones in the case of overflow.

45.2.3.12.4 Errored blocks (3.33.7:0)

The errored blocks counter is an eight bit count defined by the errored_block_count counter specified in 49.2.14.2 for 10GBASE-R and defined by the errored_block_count variable in 55.3.16.2 for 10GBASE-T. These bits shall be reset to all zeros when the errored blocks count is read by the management function or upon execution of the PCS reset. These bits shall be held at all ones in the case of overflow.

Insert the following Auto-negotiation information as 45.2.7 and shift other subclauses. Renumber tables to flow sequentially based on 802.3REVam and any amendments to it.

45.2.7 Auto-negotiation registers

The assignment of registers in the auto-negotiation (AN) MMD is shown in Table 45–117.

Table 45–117— Auto-negotiation MMD registers

Register address	Register name
7.0	AN control
7.1	AN status
7.2, 7.3	AN device identifier
7.4	Reserved
7.5, 7.6	AN devices in package
7.7 through 7.13	Reserved
7.14, 7.15	AN package identifier
7.16	AN LD advertisement
7.17 through 7.18	Reserved

Copyright © 2005 IEEE. All rights reserved.
This is an unapproved draft, subject to change

Table 45–117— Auto-negotiation MMD registers

Register address	Register name
7.19	AN LP base page ability
7.20 through 7.21	Reserved
7.22 through 7.24	AN LD XNP transmit
7.25 through 7.27	AN LP XNP ability
7.28 through 7.31	Reserved
7.32	10GBASE-T AN control
7.33	10GBASE-T AN status
7.34	10GBASE-T AN control 2
7.35 through 7.32 767	Reserved
7.32 768 through 7.65 535	Vendor specific

45.2.7.1 AN control register (Register 7.0)

The assignment of bits in the AN control register is shown in Table 45–118. The default value for each bit of the AN control register has been chosen so that the initial state of the device upon power up or completion of reset is a normal operational state without management intervention.

Table 45–118—AN control register bit definitions

Bit(s)	Name	Description	R/W[a]
7.0.15	Reset	1 = AN reset 0 = AN Normal operation	R/W SC
7.0.14:13	Reserved	Value always 0, writes ignored	R/W
7.0.12	Auto-negotiation enable	1 = enable Auto-negotiation process 0 = disable Auto-negotiation process	R/W
7.0.11:10	Reserved	Value always 0, writes ignored	R/W
7.0.9	Restart auto-negotiation	1 = Restart auto-negotiation process 0 = Auto-negotiation in process, disabled, or not supported	R/W SC
7.0.8:0	Reserved	Value always 0, writes ignored	R/W

[a]R/W = Read/Write, SC = Self Clearing

45.2.7.1.1 Reset (7.0.15)

Resetting AN is accomplished by setting bit 7.0.15 to a one. This action shall set all AN registers to their default states. As a consequence, this action may change the internal state of AN and the state of the physical link. This action may also initiate a reset in any other MMDs that are instantiated in the same package. This

Copyright © 2005 IEEE. All rights reserved.
This is an unapproved draft, subject to change

bit is self-clearing, and AN shall return a value of one in bit 7.0.15 when a reset is in progress and value of zero otherwise. AN is not required to accept a write transaction to any of its registers until the reset process is complete. The reset process shall be completed within 0.5 s from the setting of bit 7.0.15. During a reset, AN shall respond to reads from register bit 7.0.15. All other register bits should be ignored.

NOTE- This operation may interrupt data communication.

45.2.7.1.2 Auto-negotiation enable (7.0.12)

The auto-negotiation function shall be enabled by setting bit 7.0.12 to a logic one. If bit 7.0.12 is set to a logic one, then bits 1.0.13, 1.0.6 and bits 1.0.5:2 in PHY control register 1 and PHY type selection bit 1.7.3:0 in PHY control register 2 shall have no effect on the link configuration, and the auto-negotiation process will determine the link configuration. If bit 7.0.12 is cleared to logic zero, then bits 1.0.13, 1.0.6 and bits 1.0.5:2 in control register 1 and type selection bit 1.7.3:0 in control register 2 will determine the link configuration regardless of the prior state of the link configuration and the auto-negotiation process. Bit 7.0.12 is a copy of bit 0.12 in register 0 as defined in section 22.2.4.

45.2.7.1.3 Restart auto-negotiation (7.0.9)

If the PMA/PMD reports via bit 7.1.3 that it lacks the ability to perform auto-negotiation, or if auto-negotiation is disabled, the PMA/PMD shall return a value of zero in bit 7.0.9 and any attempt to write a one to bit 7.0.9 will be ignored.

Otherwise, the auto-negotiation process shall be restarted by setting bit 7.0.9 to a logic one. This bit is self-clearing, and a PMA/PMD shall return a value of one in bit 7.0.9 until the auto-negotiation process has been initiated. If a PMA/PMD reports via bit 7.1.3 that it lacks the ability to perform auto-negotiation, then this bit will have no meaning, and should be written as zero. If auto-negotiation was completed prior to this bit being set, the process shall be reinitiated. The auto-negotiation process shall not be affected by clearing this bit to logic zero. Bit 7.0.9 is a copy of 0.9 in register 0 as defined in section 22.2.4.

45.2.7.2 AN status register (Register 7.1)

The assignment of bits in the AN status register is shown in Table 45–119. All the bits in the AN status register are read only; therefore, a write to the AN status register shall have no effect.

45.2.7.2.1 Page Received (7.1.6)

The Page Received bit (7.1.6) shall be set to logic one to indicate that a new Link Code Word has been received and stored in the AN LP XNP ability registers 7.25-7.27. The Page Received bit shall be reset to logic zero on a read of the AN LD base page register (Register 7.1). This bit is a copy of bit 6.1 in register 6 as described in section 28.2.4.1.

45.2.7.2.2 Auto-negotiation complete (7.1.5)

When read as a logic one, bit 7.1.5 indicates that the auto-negotiation process has been completed, and that the contents of the auto-negotiation registers 7.16, 7.19 and 7.22 through 7.27 are valid. When read as a logic zero, bit 7.1.5 indicates that the auto-negotiation process has not been completed, and that the contents of 7.16, 7.19 and 7.22 through 7.27 registers are meaningless. A PMA/PMD shall return a value of zero in bit 7.1.5 if auto-negotiation is disabled by clearing bit 7.0.12. A PMA/PMD shall also return a value of zero in bit 7.1.5 if it lacks the ability to perform auto-negotiation. Bit 7.1.5 is a copy of bit 1.5 in register 1 as defined in section 22.2.4.

Copyright © 2005 IEEE. All rights reserved.
This is an unapproved draft, subject to change

Table 45–119— AN status register

Bit(s)	Name	Description	R/W[a]
7.1.15:5	Reserved	Ignore on read	RO
7.1.6	Page received	1 = A New Page has been received 0 = A New Page has not been received	RO LH
7.1.5	Auto-negotiation complete	1 = Auto-negotiation process completed 0 = Auto-negotiation process not completed	RO
7.1.4	Remote fault	1 = remote fault condition detected 0 = no remote fault condition detected	RO LH SC
7.1.3	Auto-negotiation ability	1 = PHY is able to perform auto-negotiation 0 = PHY is not able to perform auto-negotiation	RO
7.1.2	Link Status	1 = Link is up 0 = Link is down	RO LL SC
7.1.2:0	Reserved	Ignore on read	RO

[a]R/W = Read/Write, RO = Read only, LH = Latching High, SC = Self Clearing, LL = Latching Low

45.2.7.2.3 Remote fault (7.1.4)

When read as logic one, bit 7.1.4 indicates that a remote fault condition has been detected. The type of fault as well as the criteria and method of fault detection is AN specific. The remote fault bit shall be implemented with a latching function, such that the occurrence of a remote fault will cause the bit 7.1.4 to become set and remain set until it is cleared. Bit 7.1.4 shall be cleared each time register 7.1 is read via the management interface, and shall also be cleared by a AN reset. Bit 7.1.4 is a copy of bit 1.4 in register 1 as defined in section 22.2.4.

45.2.7.2.4 Auto-negotiation ability (7.1.3)

When read as a logic one, bit 7.1.3 indicates that the PMA/PMD has the ability to perform auto-negotiation. When read as a logic zero, bit 7.1.3 indicates that the PMA/PMD lacks the ability to perform auto-negotiation. Bit 7.1.3 is a copy of bit 1.3 in register 1 as defined in section 22.2.4

45.2.7.2.5 Link Status (7.1.2)

When read as a logic one, bit 7.1.2 indicates that the PMA/PMD has determined that a valid link has been established. Bit 7.1.2 will be set to one when the variable link_status = OK and will cleared to zero otherwise. When read as a logic zero, bit 7.1.2 indicates that the link is not valid. The Link Status bit shall be implemented with a latching function, such that the occurrence of a link failure condition will cause the Link Status bit to become cleared and remain cleared until it is read via the management interface. This status indication is intended to support the management attribute defined in 30.5.1.1.4, aMediaAvailable.

45.2.7.3 Auto-negotiation device identifier (Registers 7.2 and 7.3)

Registers 7.2 and 7.3 provide a 32-bit value, which may constitute a unique identifier for an auto-negotiation. The identifier shall be composed of the 3rd through 24th bits of the Organizationally Unique Identifier (OUI) assigned to the device manufacturer by the IEEE, plus a six-bit model number, plus a four-bit revision

Copyright © 2005 IEEE. All rights reserved.
This is an unapproved draft, subject to change

number. An auto-negotiation may return a value of zero in each of the 32 bits of the auto-negotiation device identifier.

The format of the auto-negotiation device identifier is specified in 22.2.4.3.1

45.2.7.4 AN devices in package (Registers 7.5 and 7.6)

The AN devices in package registers are defined in Table 45–2.

45.2.7.5 AN package identifier (Registers 7.14 and 7.15)

Registers 7.14 and 7.15 provide a 32-bit value, which may constitute a unique identifier for a particular type of package that the auto-negotiation is instantiated within. The identifier shall be composed of the 3rd through 24th bits of the Organizationally Unique Identifier (OUI) assigned to the package manufacturer by the IEEE, plus a six-bit model number, plus a four-bit revision number. An auto-negotiation MMD may return a value of zero in each of the 32 bits of the auto-negotiation package identifier.

A non-zero package identifier may be returned by one or more MMDs in the same package. The package identifier may be the same as the device identifier.

The format of the auto-negotiation package identifier is specified in 22.2.4.3.1.

45.2.7.6 AN advertisement register (7.16)

This register contains the Advertised Ability for the 10GBASE-T PHY. This register is a copy of the Advertisement register 4 described in section 28.2.4.1.3 (See Table 45–120). The bit definition for the base page is defined in 28.2.1.2. On power-up, before Auto-Negotiation starts, this register shall have the following configuration: The Selector Field (7.16.4:0) is set to an appropriate code as specified in Annex 28A. The Acknowledge bit (7.16.14) is set to logic zero. The Technology Ability Field (7.16.12:5) is set based on the values .

Table 45–120—AN advertisement register bit definitions

Bit(s)	Name	Description	R/W
7.16.15	Next Page	See 28.2.1.2	R/W
7.16.14	Reserved	Write as zero, ignore on read	RO
7.16.13	Remote Fault	See 28.2.1.2	R/W
7.16.12:5	Technology Ability Field	See 28.2.1.2	R/W
7.16.4:0	Selector Field	See 28.2.1.2	R/W

Only the bits in the Technology Ability Field that represent the technologies supported by the Local Device may be set. Any of the Technology Ability Field bits that may be set can also be cleared by management before a renegotiation. This can be used to enable management to Auto-Negotiate to an alternate common mode.

The management entity may initiate renegotiation with the Link Partner using alternate abilities by setting the Selector Field (4.4:0) and Technology Ability Field (4.12:5) to indicate the preferred mode of operation and setting the Restart Auto-Negotiation bit (7.0.9) in the AN control register (Register 7.0) to logic one.

Copyright © 2005 IEEE. All rights reserved.
This is an unapproved draft, subject to change

Any writes to this register prior to completion of Auto-Negotiation as indicated by bit 7.1.5 should be followed by a renegotiation for the new values to be properly used for Auto-Negotiation. Once Auto-Negotiation has completed, this register value may be examined by software to determine the highest common denominator technology.

45.2.7.7 AN LP base page ability register (7.19)

Support for 10GBASE-T requires support to store the link partner (LP) base page ability register as shown in Table 45–121. All of the bits in the AN LP base page ability register are read only. A write to the AN LP base page ability register shall have no effect. Register 7.19 is a copy of register 5 as described in 28.2.4.1

Table 45–121—AN LP base page ability register bit definitions

Bit(s)	Name	Description	R/W[a]
7.19.15	Next page	See 28.2.1.2	RO
7.19.14	Acknowledge	See 28.2.1.2	RO
7.19.13	Remote fault	See 28.2.1.2	RO
7.19.12:5	Technology ability field	See 28.2.1.2	RO
7.19.4:0	Selector field	See 28.2.1.2	RO

[a]RO = Read Only

45.2.7.8 AN LD XNP transmit register (7.22, 7.23, and 7.24)

The auto-negotiation local device (LD) extended next page (XNP) transmit register contains the next page link code word to be transmitted when extended next page ability is enabled (see Table 45–124). The contents are defined in 28.2.3.4. On power-up, this register shall contain the default value, which represents a Message Page with the Message Code set to Null Message. This value may be replaced by any valid extended Next Page Message Code that the device wishes to transmit. Writing to this register shall set mr_next_page_loaded to true as described in 28.2.4.1.8

Table 45–122—AN LD XNP transmit register bit definitions

Bit(s)	Name	Description	R/W[a]
7.22.15	Next Page	See 28.2.3.4	R/W
7.22.14	Reserved	Write as 0, ignore on read	RO
7.22.13	Message Page	See 28.2.3.4	R/W
7.22.12	Acknowledge 2	See 28.2.3.4	R/W
7.22.11	Toggle	See 28.2.3.4	RO

Copyright © 2005 IEEE. All rights reserved.
This is an unapproved draft, subject to change

Table 45–122—AN LD XNP transmit register bit definitions

Bit(s)	Name	Description	R/W[a]
7.22.10:0	Message Code Field	See 28.2.3.4	R/W
7.23.15:0	Unformatted Code field (bits U15:U0)	See 28.2.3.4	R/W
7.24.15:0	Unformatted Code field (bits U31:U16)	See 28.2.3.4	R/W

[a]R/W = Read/Write, RO = Read Only

45.2.7.9 AN LP XNP ability register (7.25, 7.26, and 7.27)

Support for 10GBASE-T requires support for extended next pages and the provision of an AN LP XNP ability register (registers 7.25, 7.26, and 7.27) to store link partner extended next pages as shown in Table 45–3. All of the bits in the AN LP XNP ability register are read only. A write to the AN LP XNP ability register shall have no effect.

NOTE—If this register is used to store multiple link partner extended next pages, the previous value of this register is assumed to be stored by a management entity that needs the information overwritten by subsequent link partner extended next pages.

Table 45–123—AN LP XNP ability register bit definitions

Bit(s)	Name	Description	R/W[a]
7.25.15	Next Page	See 28.2.3.4	RO
7.25.14	Acknowledge	See 28.2.3.4	RO
7.25.13	Message Page	See 28.2.3.4	RO
7.25.12	Acknowledge 2	See 28.2.3.4	RO
7.25.11	Toggle	See 28.2.3.4	RO
7.25.10:0	Message Code Field	See 28.2.3.4	RO
7.26.15:0	Unformatted Code field (bits U15:U0)	See 28.2.3.4	RO
7.27.15:0	Unformatted Code field (bits U31:U16)	See 28.2.3.4	RO

[a]RO = Read Only

Copyright © 2005 IEEE. All rights reserved.
This is an unapproved draft, subject to change

45.2.7.10 10GBASE-T AN control register (Register 7.32)

The assignment of bits in the 10GBASE-T AN control register is shown in Table 45–124. The default values for each bit of the 10GBASE-T AN control register should be chosen so that the initial state of the device upon power up or reset is a normal operational state without management intervention.

Table 45–124—10GBASE-T AN control register

Bit(s)	Name	Description	R/W[a]
7.32.15	MASTER-SLAVE manual config enable	1=Enable MASTER-SLAVE Manual configuration 0=Disable MASTER-SLAVE Manual configuration Default value is 0.	R/W
7.32.14	MASTER-SLAVE config value	1=Configure PHY as MASTER 0=Configure PHY as SLAVE Default value is 0	R/W
7.32.13	Port type	1=Multiport device 0=single-port device	R/W
7.32.12	10GBASE-T Full duplex ability	1 = Advertise PHY as 10GBASE-T full duplex capable. 0 = Advertise PHY as not 10GBASE-T full duplex capable. Default value is 1	R/W
7.32.11	Reserved		
7.32.10:0	MASTER-SLAVE seed value (10:0)	10GBASE-T MASTER-SLAVE seed bits. Bit 10 is the MSB.	R/W

[a]R/W = Read/Write, LH = Latching High

45.2.7.10.1 MASTER-SLAVE manual config enable (7.32.15)

If bit 7.32.15 is set to one then MASTER-SLAVE config value bit 7.32.14 will be used to determine if the PHY will operate as MASTER or SLAVE. If bit 7.32.15 is set to zero the PHY will use Auto-negotiation to determine the selection of MASTER or SLAVE. Additional information regarding the resolution and selection of MASTER-SLAVE and bit 7.32.15 is contained in 55.6.2. The default value for bit 7.32.15 is zero.

45.2.7.10.2 MASTER-SLAVE config value (7.32.14)

Bit 7.32.14 is used to select MASTER or SLAVE operation if MASTER-SLAVE manual config bit 7.32.15 is set to one. If bit 7.32.14 is set to one the PHY will operate as MASTER. If bit 7.32.13 is set to zero the PHY will operate as SLAVE. Additional information regarding the resolution and selection of MASTER-SLAVE and bit 7.32.14 is contained in 55.6.2. The default value for bit 7.32.14 is zero.

45.2.7.10.3 Port type (7.32.13)

Bit 7.32.13 is to be used to indicate the preference during Auto-negotiation to operate as MASTER (multi-port device) or as SLAVE (single-port device) if the MASTER-SLAVE manual configuration enable bit 7.32.15, is zero. If bit 7.32.13 is set to one a preference to operate as MASTER is indicated. If bit 7.32.13 is set to zero a preference to operate as SLAVE is indicated. Section 55.6.2 contains additional information regarding the resolution and selection of MASTER-SLAVE and this bit.

Copyright © 2005 IEEE. All rights reserved.
This is an unapproved draft, subject to change

45.2.7.10.4 10GBASE-T full duplex ability (7.32.12)

When read as a logic one, bit 7.32.12 indicates that the PHY has the ability to perform full duplex link transmission and reception using the 10GBASE-T signaling specification in Clause 55. When read as a logic zero, bit 7.32.12 indicates that the PHY lacks the ability to support full duplex operation.

45.2.7.10.5 MASTER-SLAVE seed value (7.32.10:0)

The MASTER-SLAVE seed value bits 7.32.10:0 are used during the auto-negotiation process to determine the MASTER/SLAVE relationship with the link partner. The method of generating a random or pseudorandom seed is left to the implementer. The generated random seeds should belong to a sequence of independent, identically distributed integer numbers with a uniform distribution in the range of 0 to 2^{11}. The algorithm used to generate the integer should be designed to minimize the correlation between the number generated by any two devices at any given time. Additional details on how selection of MASTER and SLAVE are resolved are provided in 55.6.2.

45.2.7.11 10GBASE-T AN status register (Register 7.33)

The assignment of bits in the 10GBASE-T AN status register is shown in Table 45–125. All the bits in the 10GBASE-T AN status register are read only; a write shall have no effect.

Table 45–125—10GBASE-T AN status register

Bit(s)	Name	Description	R/W[a]
7.33.15	MASTER-SLAVE configuration fault	1 = MASTER-SLAVE configuration fault detected 0 = No MASTER-SLAVE configuration fault detected	RO LH SC
7.33.14	MASTER-SLAVE configuration resolution	1 = Local PHY configuration resolved to MASTER 0 = Local PHY configuration resolved to SLAVE	RO
7.33.13	Local receiver status	1 = Local receiver OK 0 = Local receiver not OK	RO
7.33.12	Remote receiver status	1 = Remote receiver OK 0 = Remote receiver not OK	RO
7.33.11	Link partner 10GBASE-T FD	1 = Link partner is capable of 10GBASE-T full duplex 0 = Link partner is not capable of 10GBASE-T full duplex This bit is guaranteed to be valid only when the Page received bit (6.1) has been set to 1.	RO
7.33.10	Loop timing ability	1 = PHY is capable of Loop timing 0 = PHY is not capable of Loop timing	RO
7.33.9	LD PMA training	1 = Local device will reset PMA Training PRBS every frame 0 = Local device will not reset PMA Training PRBS	RO
7.33.8	LP THP startup	1 = Link Partner is not expecting MASTER to increment THP during PMA training 0 = Link Partner is expecting MASTER transmitter to increment THP during PMA training	RO
7.33.7	LP THP	1 = Link partner implements IIR filters 0 = Link partner implements FIR filters	RO

Copyright © 2005 IEEE. All rights reserved.
This is an unapproved draft, subject to change

Table 45–125—10GBASE-T AN status register *(continued)*

Bit(s)	Name	Description	R/W[a]
7.34.6	LP THP IIR down selection	If LD implements IIR THP then: 0 = LD shall use THP IIR filter subset 1 1 = LD shall use THP IIR filter subset 2	RO
7.34.5:4	LP THP FIR down selection	if LD implements FIR THP then: 00 = LD shall use THP FIR filter subset 1 01 = LD shall use THP FIR filter subset 2 10 = LD shall use THP FIR filter subset 3 11 = reserved, not valid	RO
7.33.3:0	Reserved	Value always 0, writes ignored	RO

[a]R/W = Read/Write, RO = Read Only, SC = Self Clearing, LH = Latch High

45.2.7.11.1 MASTER-SLAVE configuration fault (7.33.15)

MASTER-SLAVE configuration fault bit 7.33.15 will be set in the event that determination of the MASTER-SLAVE cannot be successfully concluded. MASTER-SLAVE configuration fault, as well as the criteria and method of fault detection, is PHY specific. Additional information regarding the resolution and selection of MASTER-SLAVE and bit 7.33.15 for 10GBASE-T in contained in 55.6.2. The MASTER-SLAVE configuration fault bit 7.33.15 will be cleared each time the 10GBASE-T status register 7.33 is read via the management interface and will be cleared by a 10GBASE-T PMA reset. Bit 7.33.15 will self clear upon auto-negotiation enable.

45.2.7.11.2 MASTER-SLAVE configuration resolution (7.33.14)

Bit 7.33.14 will be determined by the MASTER-SLAVE configuration resolution function described in 55.6.2. If the MASTER-SLAVE configuration resolution bit 7.33.14 is set to one and the Auto-negotiation complete bit 7.1.5 is set and if MASTER-SLAVE configuration fault bit 7.33.15 in the 10GBASE-T status register is zero then MASTER mode of operation is selected. If the MASTER-SLAVE configuration resolution bit 7.33.14 is set to zero and the Auto-negotiation complete bit 7.1.5 is set and if MASTER-SLAVE configuration fault bit 7.33.15 in the 10GBASE-T status register is zero then SLAVE mode of operation is selected.

45.2.7.11.3 Local receiver status (7.33.13)

Local receiver status bit 7.33.13 will be set if the local receiver is OK as defined in 55.2.8. If the local receiver status bit 7.33.13 is zero the local receiver is not OK as defined in 55.2.8.

45.2.7.11.4 Remote receiver status (7.33.12)

Remote receiver status bit 7.33.13 will be set if the remote receiver status is OK as defined in 55.2.9. If the local receiver status bit 7.33.13 is zero the local receiver is not OK as defined in 55.2.9.

45.2.7.11.5 Link partner 10GBASE-T FD (7.33.11)

The bit will only be valid when page receive bit 6.1 in is set to one. When read as a logic one, bit 7.33.11 indicates that the link partner has the ability to perform full duplex link transmission and reception using the 10GBASE-T signaling specification in Clause 55. When read as a logic zero, bit 7.33.11 indicates that the link partner lacks the ability to support full duplex operation.

Copyright © 2005 IEEE. All rights reserved.
This is an unapproved draft, subject to change

45.2.7.11.6 Loop timing ability (7.33.10)

When read as a logic one, bit 7.33.10 indicates that the link partner has the ability to support loop timing as specified in 55.1.3. When read as a logic zero, bit 7.33.10 indicates that the link partner lacks the ability to support loop timing.

45.2.7.11.7 LD PMA training (7.33.9)

If bit 7.33.9 is set to one then the link partner is expecting the local device to reset the PMA training PRBS for every PMA training frame. If bit 7.33.9 is zero then the link partner expects local device to run PMA Training PRBS continuously through every PMA Training frame.

45.2.7.11.8 LP THP startup (7.33.8)

LP THP startup will be used to determine if the MASTER should increment the THP during the PMA training sequence. If bit 7.33.8 is set to one the SLAVE receiver does not expect the MASTER transmitter to increment the THP during PMA training initialization. If bit 7.33.8 is zero the SLAVE receiver does expect the MASTER transmitter to increment the THP setting during PMA training initialization. Only the device selected as SLAVE will use this setting to determine the behavior of the MASTER during PMA training. Only a device selected as MASTER will use the setting of this bit by its link partner to determine if it will increment the THP during the PMA training initialization.

45.2.7.11.9 THP (7.33.7)

If bit 7.33.7 is set to one the local device is implemented with IIR filters. If bit 7.33.7 is zero then the local device is implemented with FIR filters.

Copyright © 2005 IEEE. All rights reserved.
This is an unapproved draft, subject to change

45.2.7.12 10GBASE-T AN control 2 register (Register 7.34)

The assignment of bits in the 10GBASE-T AN control 2 register is shown in Table 45–126. The default values for each bit of the 10GBASE-T AN control 2 register should be chosen so that the initial state of the device upon power up or reset is a normal operational state without management intervention.

Table 45–126—10GBASE-T AN control 2 register

Bit(s)	Name	Description	R/W[a]
7.34.15:6	Reserved	Default value is 0.	RO
7.34.5	THP IIR down selection	0 = LD expects link partner to use THP IIR filter subset 1 1 = LD expects link partner to use THP IIR filter subset 2	R/W
7.34.4:3	THP FIR down selection	00 = LD expects link partner to use THP FIR filter subset 1 01 = LD expects link partner to use THP FIR filter subset 2 10 = LD expects link partner to use THP FIR filter subset 3 11 = reserved, not valid	R/W
7.34.2	LP PMA training	1 = Link partner to reset PMA Training PRBS every frame 0 = Link partner to run PMA Training PRBS continuously	R/W
7.34.1	LD THP startup	1 = SLAVE is not expecting MASTER to increment THP during PMA training 0 = SLAVE is expecting MASTER transmitter to increment THP during PMA training	R/W
7.34.0	LD loop timing	1 = LD is capable of Loop timing 0 = LD is not capable of Loop timing	R/W

[a]R/W = Read/Write, LH = Latching High, RO =Read Only

45.2.7.12.1 LP PMA training (7.34.2)

If bit 7.34.2 is set to one then the local device expects the link partner to reset the PMA training PRBS for every PMA training frame. If bit 7.34.2 is zero then the local device expects link partner to run PMA Training PRBS continuously through every PMA Training frame.

45.2.7.12.2 LD THP startup (7.34.1)

LD THP startup will be used to determine if the MASTER should increment the THP during the PMA training sequence. If bit 7.34.1 is set to one the SLAVE receiver does not expect the MASTER transmitter to increment the THP during PMA training initialization. If bit 7.34.1 is zero the SLAVE receiver does expect the MASTER transmitter to increment the THP setting during PMA training initialization. Only the device selected as SLAVE will use this setting to determine the behavior of the MASTER during PMA training. Only a device selected as MASTER will use the setting of this bit by its link partner to determine if it will increment the THP during the PMA training initialization.

45.2.7.12.3 LD loop timing (7.34.0)

LD loop timing will be used to determine if the local device supports loop timing. If bit 7.34.0 is set to one the local device will support loop timing as described in section 55.1.3. If bit 7.34.0 is zero the local device will not support loop timing.

Copyright © 2005 IEEE. All rights reserved.
This is an unapproved draft, subject to change

45.5 Protocol Implementation Conformance Statement (PICS) proforma for Clause 45, MDIO interface[2]

45.5.8 Introduction

The supplier of a protocol implementation that is claimed to conform to Clause 45, MDIO interface, shall complete the following Protocol Implementation Conformance Statement (PICS) proforma.

A detailed description of the symbols used in the PICS proforma, along with instructions for completing the PICS proforma, can be found in Clause 21.

45.5.9 Identification

45.5.9.1 Implementation identification

Supplier[1]	
Contact point for enquiries about the PICS[1]	
Implementation Name(s) and Version(s)[1,3]	
Other information necessary for full identification—e.g., name(s) and version(s) for machines and/or operating systems; System Name(s)[2]	
NOTES 1—Required for all implementations. 2—May be completed as appropriate in meeting the requirements for the identification. 3—The terms Name and Version should be interpreted appropriately to correspond with a supplier's terminology (e.g., Type, Series, Model).	

45.5.9.2 Protocol summary

Identification of protocol standard	IEEE Std 802.3ae-2002, Clause 45, Management Data Input/Output (MDIO) Interface
Identification of amendments and corrigenda to this PICS proforma that have been completed as part of this PICS	
Have any Exception items been required? No [ ] Yes [ ] (See Clause 21; the answer Yes means that the implementation does not conform to IEEE Std 802.3ae-2002.)	

Date of Statement	

[2]*Copyright release for PICS proformas:* Users of this standard may freely reproduce the PICS proforma in this subclause so that it can be used for its intended purpose and may further publish the completed PICS.

Copyright © 2005 IEEE. All rights reserved.
This is an unapproved draft, subject to change

45.5.9.3 Major capabilities/options

Item	Feature	Subclause	Value/Comment	Status	Support
*PMA	Implementation of PMA/PMD MMD	45.2.1		O	Yes [ ] No [ ]
*WIS	Implementation of WIS MMD	45.2.2		O	Yes [ ] No [ ]
*PCS	Implementation of PCS MMD	45.2.1.71		O	Yes [ ] No [ ]
*PX	Implementation of PHY XS MMD	45.2.4		O	Yes [ ] No [ ]
*DX	Implementation of DTE XS MMD	45.2.5		O	Yes [ ] No [ ]
*VSA	Implementation of Vendor Specific MMD 1	45.2.9		O	Yes [ ] No [ ]
*VSB	Implementation of Vendor Specific MMD 2	45.2.10		O	Yes [ ] No [ ]
*TC	Implementation of the TC MMD	45.2.6		10P*2B:M	Yes [ ] No [ ]
*CTT	Implementation of the Clause 22 extension MMD	45.2.8		O	Yes [ ] No [ ]

45.5.10 PICS proforma tables for the Management Data Input Output (MDIO) interface

45.5.10.1 MDIO signal functional specifications

Item	Feature	Subclause	Value/Comment	Status	Support
SF1	MDIO uses three-state drivers	45.4.1		M	Yes [ ]

Copyright © 2005 IEEE. All rights reserved.
This is an unapproved draft, subject to change

45.5.10.2 PMA/PMD MMD options

Item	Feature	Subclause	Value/Comment	Status	Support
*ALB	Implementation of PMA loop-back function	45.2.1.1.4		PMA:O	Yes [ ] No [ ] N/A [ ]
*PLF	Implementation of fault detection	45.2.1.7		PMA:O	Yes [ ] No [ ] N/A [ ]
*PTD	Implementation of transmit disable function	45.2.1.8		PMA:O	Yes [ ] No [ ] N/A [ ]
*10P	Implementation of the 10PASS-TS PMA/PMD	45.2.1.4		O	Yes [ ] No [ ]
*2B	Implementation of the 2BASE-TL PMA/PMD	45.2.1.4		O	Yes [ ] No [ ]

Copyright © 2005 IEEE. All rights reserved.
This is an unapproved draft, subject to change

45.5.10.3 PMA/PMD management functions

Item	Feature	Subclause	Value/Comment	Status	Support
MM1	Device responds to all register addresses for that device	45.2		PMA:M	Yes [ ] N/A [ ]
MM2	Writes to undefined and read-only registers have no effect	45.2		PMA:M	Yes [ ] N/A [ ]
MM3	Operation is not affected by writes to reserved and unsupported bits.	45.2		PMA:M	Yes [ ] N/A [ ]
MM4	Reserved and unsupported bits return a value of zero	45.2		PMA:M	Yes [ ] N/A [ ]
MM5	Latching low bits remain low until after they have been read via the management interface	45.2		PMA:M	Yes [ ] N/A [ ]
MM6	Latching low bits assume correct value once read via the management interface	45.2	Correct value is based upon current state	PMA:M	Yes [ ] N/A [ ]
MM7	Latching high bits remain high until after they have been read via the management interface	45.2		PMA:M	Yes [ ] N/A [ ]
MM8	Latching high bits assume correct value once read via the management interface	45.2	Correct value is based upon current state	PMA:M	Yes [ ] N/A [ ]
MM9	Action on reset	45.2.1.1.1	Reset the registers of the entire device to default values and set bit 15 of the Control register to one	PMA:M	Yes [ ] N/A [ ]
MM10	Return 1 until reset completed	45.2.1.1.1		PMA:M	Yes [ ] N/A [ ]
MM11	Control and management interfaces are restored to operation within 0.5 s of reset	45.2.1.1.1		PMA:M	Yes [ ] N/A [ ]
MM12	Responds to reads of bit 15 and 1.8.15:14 during reset	45.2.1.1.1		PMA:M	Yes [ ] N/A [ ]
MM13	Device responds to transactions necessary to exit low-power mode while in low-power state	45.2.1.1.2		PMA:M	Yes [ ] N/A [ ]
MM14	Speed selection bits 13 and 6 are written as one	45.2.1.1.3		PMA:M	Yes [ ] N/A [ ]
MM15	Invalid writes to speed selection bits are ignored	45.2.1.1.3		PMA:M	Yes [ ] N/A [ ]
MM16	PMA is set into Loopback mode when bit 0 is set to a one	45.2.1.1.4		PMA*ALB:M	Yes [ ] N/A [ ]

Copyright © 2005 IEEE. All rights reserved.
This is an unapproved draft, subject to change

Item	Feature	Subclause	Value/Comment	Status	Support
MM17	PMA transmit data is returned on receive path when in loopback	45.2.1.1.4		PMA*ALB:M	Yes [ ] N/A [ ]
MM18	PMA ignores writes to this bit if it does not support loopback.	45.2.1.1.4		PMA*!ALB:M	Yes [ ] N/A [ ]
MM19	PMA returns a value of zero when read if it does not support loopback.	45.2.1.1.4		PMA*!ALB:M	Yes [ ] N/A [ ]
MM20	Writes to status 1 register have no effect	45.2.1.2		PMA:M	Yes [ ] N/A [ ]
MM21	Receive link status implemented with latching low behavior	45.2.1.2.2		PMA:M	Yes [ ] N/A [ ]
MM22	Unique identifier is composed of OUI, model number and revision	45.2.1.3		PMA:M	Yes [ ] N/A [ ]
MM23	10G PMA/PMD type is selected using bits 2:0	45.2.1.6.1		PMA:M	Yes [ ] N/A [ ]
MM24	10G PMA/PMD ignores writes to type selection bits that select types that it has not advertised	45.2.1.6.1		PMA:M	Yes [ ] N/A [ ]
MM25	Writes to the status 2 register have no effect	45.2.1.7		PMA:M	Yes [ ] N/A [ ]
MM26	PMA/PMD returns a value of zero for transmit fault if it is unable to detect a transmit fault	45.2.1.7.4		PMA:M	Yes [ ] N/A [ ]
MM27	Transmit fault is implemented using latching high behavior	45.2.1.7.4		PMA*PLF:M	Yes [ ] N/A [ ]
MM28	PMA/PMD returns a value of zero for receive fault if it is unable to detect a receive fault	45.2.1.7.5		PMA*!PLF:M	Yes [ ] N/A [ ]
MM29	Receive fault is implemented using latching high behavior	45.2.1.7.5		PMA*PLF:M	Yes [ ] N/A [ ]
MM30	Writes to register 9 are ignored by device that does not implement transmit disable	45.2.1.8		PMA*!PTD:M	Yes [ ] N/A [ ]
MM31	Single wavelength device uses bit 1.9.0 for transmit disable	45.2.1.8		PMA*PTD:M	Yes [ ] N/A [ ]
MM32	Single wavelength device ignores writes to bits 1 – 4 and returns a value of zero for them	45.2.1.8		PMA*PTD:M	Yes [ ] N/A [ ]
MM33	Setting bit 4 to a one disables transmission on lane 3	45.2.1.8.1		PMA*PTD:M	Yes [ ] No [ ] N/A [ ]
MM34	Setting bit 4 to a zero enables transmission on lane 3	45.2.1.8.1		PMA*PTD:M	Yes [ ] No [ ] N/A [ ]

Copyright © 2005 IEEE. All rights reserved.
This is an unapproved draft, subject to change

Item	Feature	Subclause	Value/Comment	Status	Support
MM35	Setting bit 3 to a one disables transmission on lane 2	45.2.1.8.2		PMA*PTD:M	Yes [ ] No [ ] N/A [ ]
MM36	Setting bit 3 to a zero enables transmission on lane 2	45.2.1.8.2		PMA*PTD:M	Yes [ ] No [ ] N/A [ ]
MM37	Setting bit 2 to a one disables transmission on lane 1	45.2.1.8.3		PMA*PTD:M	Yes [ ] No [ ] N/A [ ]
MM38	Setting bit 2 to a zero enables transmission on lane 1	45.2.1.8.3		PMA*PTD:M	Yes [ ] No [ ] N/A [ ]
MM39	Setting bit 1 to a one disables transmission on lane 0	45.2.1.8.4		PMA*PTD:M	Yes [ ] No [ ] N/A [ ]
MM40	Setting bit 1 to a zero enables transmission on lane 0	45.2.1.8.4		PMA*PTD:M	Yes [ ] No [ ] N/A [ ]
MM41	Setting bit 0 to a one disables transmission	45.2.1.8.5		PMA*PTD:M	Yes [ ] No [ ] N/A [ ]
MM42	Setting bit 0 to a zero enables transmission	45.2.1.8.5	Only if all lane transmit disables are zero	PMA*PTD:M	Yes [ ] No [ ] N/A [ ]
MM43a	Writes to the extended ability register have no effect	45.2.1.10		PMA:M	Yes [ ] N/A [ ]
MM43b	Unique identifier is composed of OUI, model number and revision	45.2.1.11		PMA:M	Yes [ ] N/A [ ]
MM46	Bit indicates link down while initializing	45.2.1.2.2		PMA*10P*2B:M	Yes [ ] N/A [ ]
MM47	Bit remains a one and writing a one is ignored when link is up or initializing	45.2.1.11.1		PMA*10P*2B:M	Yes [ ] N/A [ ]
MM48	Bit set to zero upon reset or upon link down	45.2.1.11.1	-O sub-types only	PMA*10P*2B:M	Yes [ ] N/A [ ]
MM49	Bit set to one upon reset or upon link down	45.2.1.11.1	-R sub-types only	PMA*10P*2B:M	Yes [ ] N/A [ ]
MM50	Handshake tones not sent while bit is set to zero	45.2.1.11.1		PMA*10P*2B:M	Yes [ ] N/A [ ]
MM51	Writes to set unsupported modes or when link is not down are ignored	45.2.1.12.4		PMA*10P*2B:M	Yes [ ] N/A [ ]
MM52	Setting bit to one to one issues a cleardown command	45.2.1.12.5		PMA*10P*2B:M	Yes [ ] N/A [ ]
MM53	MMD clears bit to zero when cleardown command is issued or on reset	45.2.1.12.5		PMA*10P*2B:M	Yes [ ] N/A [ ]

Copyright © 2005 IEEE. All rights reserved.
This is an unapproved draft, subject to change

Item	Feature	Subclause	Value/Comment	Status	Support
MM54	Writes ignored if link is not in “Link down (ready)” state	45.2.1.12.5	link state described in 45.2.1.13.4	PMA*10P*2B: M	Yes [ ] N/A [ ]
MM55	PMA/PMD does not respond to handshake tones while bit is set to one	45.2.1.12.6		PMA*10P*2B: M	Yes [ ] N/A [ ]
MM56	PMA/PMD responds to hand-shake tones properly when bit is set to zero	45.2.1.12.6		PMA*10P*2B: M	Yes [ ] N/A [ ]
MM57	Bit set to zero upon MMD reset	45.2.1.12.6		PMA*10P*2B: M	Yes [ ] N/A [ ]
MM58	Writes to set unsupported modes are ignored	45.2.1.12.7		PMA*10P*2B: M	Yes [ ] N/A [ ]
MM59	Bits zero when link is down or initializing	45.2.1.12.1		PMA*10P*2B: M	Yes [ ] N/A [ ]
MM60	Bits set indicate linked port type or link status	45.2.1.13.4		PMA*10P*2B: M	Yes [ ] N/A [ ]
MM61	Bits indicate 001 while link is initializing	45.2.1.13.4		PMA*10P*2B: M	Yes [ ] N/A [ ]
MM62	Bits indicate 000 when link is down and handshake tones are not detected	45.2.1.13.4		PMA*10P*2B: M	Yes [ ] N/A [ ]
MM63	Bits indicate 100 when link is down and handshake tones are detected	45.2.1.13.4		PMA*10P*2B: M	Yes [ ] N/A [ ]
MM64	Bit held as one during opera-tion, clears to zero after	45.2.1.13.1		PMA*10P*2B: M	Yes [ ] N/A [ ]
MM65	Result = failed after 10 second timeout	45.2.1.13.1		PMA*10P*2B: M	Yes [ ] N/A [ ]
MM66	Writes to one while link is down are marked completed and failed	45.2.1.13.1		PMA*10P*2B: M	Yes [ ] N/A [ ]
MM67	Bit held as one during opera-tion, clears to zero after	45.2.1.13.2		PMA*10P*2B: M	Yes [ ] N/A [ ]
MM68	Result = failed after 10 second timeout	45.2.1.13.2		PMA*10P*2B: M	Yes [ ] N/A [ ]
MM69	Writes to one while link is down are marked completed and failed	45.2.1.13.2		PMA*10P*2B: M	Yes [ ] N/A [ ]
MM70	Bit set to result of the “Get” operation	45.2.1.15.1		PMA*10P*2B: M	Yes [ ] N/A [ ]
MM71	Bit set to zero on read or reset	45.2.1.15.1		PMA*10P*2B: M	Yes [ ] N/A [ ]
MM72	Bit set to result of the “Send ”operation	45.2.1.15.2		PMA*10P*2B: M	Yes [ ] N/A [ ]
MM73	Bits are reset to zero when read or on reset	45.2.1.16		PMA*10P*2B: M	Yes [ ] N/A [ ]

Copyright © 2005 IEEE. All rights reserved.
This is an unapproved draft, subject to change

Item	Feature	Subclause	Value/Comment	Status	Support
MM74	Bits are held to all ones upon counter overflow	45.2.1.16		PMA*10P*2B: M	Yes [ ] N/A [ ]
MM75	Bits are reset to zero when read or reset	45.2.1.23		PMA*10P:M	Yes [ ] N/A [ ]
MM76	Bits are reset to zero when read or reset	45.2.1.24		PMA*10P:M	Yes [ ] N/A [ ]
MM77	Bits are held at all ones when PHY cannot determine value	45.2.1.27.1	ex: While link is down	PMA*10P:M	Yes [ ] N/A [ ]
MM78	Bit remain as one while tones are being refreshed	45.2.1.37.1		PMA*10P:M	Yes [ ] N/A [ ]
MM79	Bit set to zero when operation completes or upon reset	45.2.1.37.1		PMA*10P:M	Yes [ ] N/A [ ]
MM80	Bit remain as one while tones are being activated/deactivated	45.2.1.37.2		PMA*10P:M	Yes [ ] N/A [ ]
MM81	Bit set to zero when operation completes or upon reset	45.2.1.37.2		PMA*10P:M	Yes [ ] N/A [ ]
MM82	Bit remain as one while tone direction is being changed	45.2.1.37.3		PMA*10P:M	Yes [ ] N/A [ ]
MM83	Bit set to zero when operation completes or upon reset	45.2.1.37.3		PMA*10P:M	Yes [ ] N/A [ ]
MM84	Bit remain as one while SNR margins parameters are loaded	45.2.1.37.4		PMA*10P:M	Yes [ ] N/A [ ]
MM85	Bit set to zero when operation completes or upon reset	45.2.1.37.4		PMA*10P:M	Yes [ ] N/A [ ]
MM86	Bit remain as one while PSD level is set	45.2.1.37.5		PMA*10P:M	Yes [ ] N/A [ ]
MM87	Bit set to zero when operation completes or upon reset	45.2.1.37.5		PMA*10P:M	Yes [ ] N/A [ ]
MM88	Bit remain as one while reference PSD level is set	45.2.1.37.6		PMA*10P:M	Yes [ ] N/A [ ]
MM89	Bit set to zero when operation completes or upon reset	45.2.1.37.6		PMA*10P:M	Yes [ ] N/A [ ]
MM90	Bits are reset to zero when read or upon reset	45.2.1.38.1		PMA*10P:M	Yes [ ] N/A [ ]
MM91	Bits read as zero	45.2.1.39.6		PMA*10P:M	Yes [ ] N/A [ ]
MM92	Bits read as zero	45.2.1.39.7		PMA*10P:M	Yes [ ] N/A [ ]
MM93	Writes to an invalid value are ignored	45.2.1.41	Valid values are decimal 10, 20, or 40	PMA*10P:M	Yes [ ] N/A [ ]
MM94	Bits set to default value on MMD reset	45.2.1.41	Default value is decimal 20	PMA*10P:M	Yes [ ] N/A [ ]
MM95	Writes to set an invalid value are ignored	45.2.1.44.1	Valid values are decimal 3 through 89	PMA*10P:M	Yes [ ] N/A [ ]

Copyright © 2005 IEEE. All rights reserved.
This is an unapproved draft, subject to change

Item	Feature	Subclause	Value/Comment	Status	Support
MM96	Writes to set an invalid value are ignored	45.2.1.44.2	Valid values are decimal 3 through 89	PMA*10P:M	Yes [ ] N/A [ ]
MM97	Writes to set an invalid value are ignored	45.2.1.44.3	Valid values are decimal 1through 86	PMA*10P:M	Yes [ ] N/A [ ]
MM98	Writes to set an invalid value are ignored	45.2.1.44.5	Invalid value is 11	PMA*10P:M	Yes [ ] N/A [ ]
MM99	Bits set to zero when read or reset	45.2.1.45		PMA*2B:M	Yes [ ] N/A [ ]
MM100	Bits set to zero when read or reset	45.2.1.47		PMA*2B:M	Yes [ ] N/A [ ]
MM101	Bits set to zero when read or reset	45.2.1.49		PMA*2B:M	Yes [ ] N/A [ ]
MM102	Bits set to zero when read or reset	45.2.1.51		PMA*2B:M	Yes [ ] N/A [ ]
MM103	Bits set to zero when read or reset	45.2.1.53		PMA*2B:M	Yes [ ] N/A [ ]
MM104	Writes to set an invalid value are ignored	45.2.1.58.1	Valid values are decimal 3 through 89	PMA*10P:M	Yes [ ] N/A [ ]
MM105	Writes to set an invalid value are ignored	45.2.1.58.2	Valid values are decimal 3 through 89	PMA*10P:M	Yes [ ] N/A [ ]
MM106	Writes to set an invalid value are ignored	45.2.1.58.3	Valid values are decimal 1through 86	PMA*10P:M	Yes [ ] N/A [ ]
MM107	Writes to set an invalid value are ignored	45.2.1.58.5	Invalid value is 11	PMA*10P:M	Yes [ ] N/A [ ]

Copyright © 2005 IEEE. All rights reserved.
This is an unapproved draft, subject to change

45.5.10.6 PCS options

Item	Feature	Subclause	Value/Comment	Status	Support
*CR	Implementation of 10GBASE-R PCS	45.2.1.71		PCS:O	Yes [ ] No [ ] N/A [ ]
*CX	Implementation of 10GBASE-X PCS	45.2.1.71		PCS:O	Yes [ ] No [ ] N/A [ ]
*XP	Implementation of 10GBASE-X pattern testing	45.2.1.71		PCS* CX:O	Yes [ ] No [ ] N/A [ ]
*PPT	Implementation of PRBS31 pattern testing	45.2.1.71		PCS:O	Yes [ ] No [ ] N/A [ ]
*EPC	Implementation of the 10BASE-TS/2BASE-TL PCS	45.2.3.17		PCS:O	Yes [ ] No [ ] N/A [ ]
*PAF	Implementation of the PME aggregation function	45.2.3.17		PCS*EPC:O	Yes [ ] No [ ] N/A [ ]

45.5.10.7 PCS management functions

Item	Feature	Subclause	Value/Comment	Status	Support
RM1	Device responds to all register addresses for that device	45.2		PCS:M	Yes [ ] N/A [ ]
RM2	Writes to undefined and read-only registers have no effect	45.2		PCS:M	Yes [ ] N/A [ ]
RM3	Operation is not affected by writes to reserved and unsupported bits	45.2		PCS:M	Yes [ ] N/A [ ]
RM4	Reserved and unsupported bits return a value of zero	45.2		PCS:M	Yes [ ] N/A [ ]
RM5	Latching low bits remain low until after they have been read via the management interface	45.2		PCS:M	Yes [ ] N/A [ ]
RM6	Latching low bits assume correct value once read via the management interface	45.2	Correct value is based upon current state	PCS:M	Yes [ ] N/A [ ]
RM7	Latching high bits remain high until after they have been read via the management interface	45.2		PCS:M	Yes [ ] N/A [ ]
RM8	Latching high bits assume correct value once read via the management interface	45.2	Correct value is based upon current state	PCS:M	Yes [ ] N/A [ ]

Copyright © 2005 IEEE. All rights reserved.
This is an unapproved draft, subject to change

Item	Feature	Subclause	Value/Comment	Status	Support
RM9	Action on reset	45.2.3.1.1	Reset the registers of the entire device to default values and set bit 15 of the Control register to one	PCS:M	Yes [ ] N/A [ ]
RM10	Return 1 until reset completed	45.2.3.1.1		PCS:M	Yes [ ] N/A [ ]
RM11	Reset completes within 0.5 s	45.2.3.1.1		PCS:M	Yes [ ] N/A [ ]
RM12	Device responds to reads of register bits 3.0.15 and 3.5.15:14 during reset	45.2.3.1.1		PCS:M	Yes [ ] N/A [ ]
RM13	Loopback mode	45.2.3.1.2	Whenever bit 3.0.14 is set to a one	PCS:M	Yes [ ] N/A [ ]
RM14	Transmit data is returned on the receive path during loopback	45.2.3.1.2		PCS:M	Yes [ ] N/A [ ]
RM15	Writes to loopback bit are ignored when operating at 10 Gb/s with port type selections other than 10GBASE-R	45.2.3.1.2		PCS:M	Yes [ ] N/A [ ]
RM16	Loopback bit returns zero when operating at 10 Gb/s with port type selections other than 10GBASE-R	45.2.3.1.2		PCS:M	Yes [ ] N/A [ ]
RM17	Device responds to transactions necessary to exit low-power mode while in low- power state	45.2.3.1.3		PCS:M	Yes [ ] N/A [ ]
RM18	Speed selection bits 13 and 6 are written as one	45.2.3.1.4		PCS:M	Yes [ ] N/A [ ]
RM19	Invalid writes to speed selection bits are ignored	45.2.3.1.4		PCS:M	Yes [ ] N/A [ ]
RM20	Writes to PCS status 1 register have no effect	45.2.3.2		PCS:M	Yes [ ] N/A [ ]
RM21	Receive link status implemented using latching low behavior	45.2.3.2.2		PCS:M	Yes [ ] N/A [ ]
RM22	Unique identifier is composed of OUI, model number and revision	45.2.3.3		PCS:M	Yes [ ] N/A [ ]
RM23	PCS type is selected using bits 1 through 0	45.2.3.6.1		PCS:M	Yes [ ] N/A [ ]
RM24	Writes to the type selection bits that select types that have not been advertised are ignored	45.2.3.6.1		PCS:M	Yes [ ] N/A [ ]
RM25	Writes to PCS status 2 register have no effect	45.2.3.7		PCS:M	Yes [ ] N/A [ ]
RM26	Transmit fault implemented with latching high behavior	45.2.3.7.2		PCS:M	Yes [ ] N/A [ ]
RM27	Receive fault implemented with latching high behavior	45.2.3.7.3		PCS:M	Yes [ ] N/A [ ]

Copyright © 2005 IEEE. All rights reserved.
This is an unapproved draft, subject to change

Item	Feature	Subclause	Value/Comment	Status	Support
RM28	Unique identifier is composed of OUI, model number and revision	45.2.3.8		PCS:M	Yes [ ] N/A [ ]
RM29	Writes to 10GBASE-X PCS status register have no effect	45.2.3.9		PCS* CX:M	Yes [ ] N/A [ ]
RM30	Register returns zero if the PCS does not implement the 10GBASE-X port type	45.2.3.9		PCS* !CX:M	Yes [ ] N/A [ ]
RM31	Writes to bit are ignored and reads return a value of zero	45.2.3.10.1		PCS* PX:M	Yes [ ] N/A [ ]
RM32	Setting the bits to <10> selects the mixed frequency pattern	45.2.3.10.2		PCS* PX:M	Yes [ ] N/A [ ]
RM33	Setting the bits to <01> selects the low-frequency pattern	45.2.3.10.2		PCS* PX:M	Yes [ ] N/A [ ]
RM34	Setting the bits to <00> selects the high-frequency pattern	45.2.3.10.2		PCS* PX:M	Yes [ ] N/A [ ]
RM35	Writes to 10GBASE-R PCS status 1 register have no effect	45.2.3.11		PCS* CR:M	Yes [ ] N/A [ ]
RM36	Reads from 10GBASE-R PCS status 1 register return zero for PCS that does not support 10GBASE-R	45.2.3.11		PCS* CR:M	Yes [ ] N/A [ ]
RM37	Writes to 10GBASE-R PCS status 2 register have no effect	45.2.3.12		PCS* CR:M	Yes [ ] N/A [ ]
RM38	Reads from 10GBASE-R PCS status 2 register return zero for PCS that does not support 10GBASE-R	45.2.3.12		PCS* CR:M	Yes [ ] N/A [ ]
RM39	Latched block lock implemented with latching low behavior	45.2.3.12.1		PCS* CR:M	Yes [ ] N/A [ ]
RM40	Latched high BER implemented with latching high behavior	45.2.3.12.2		PCS* CR:M	Yes [ ] N/A [ ]
RM41	BER counter clears to zero on read or reset	45.2.3.12.3		PCS* CR:M	Yes [ ] N/A [ ]
RM42	BER counter holds at all ones at overflow	45.2.3.12.3		PCS* CR:M	Yes [ ] N/A [ ]
RM43	Errored blocks counter implemented as a non roll over counter	45.2.3.12.4		PCS* CR:M	Yes [ ] N/A [ ]
RM44	Errored blocks counter clears to zero on read	45.2.3.12.4		PCS* CR:M	Yes [ ] N/A [ ]
RM45	Setting bit 3.42.5 to a one enables PRBS31 receive pattern testing if bit 3.32.2 is a one and bit 3.42.2 is not a one	45.2.3.15.1		PCS* PPT:M	Yes [ ] N/A [ ]
RM46	Setting bit 3.42.5 to a zero disables PRBS31 receive pattern testing	45.2.3.15.1		PCS* PPT:M	Yes [ ] N/A [ ]

Copyright © 2005 IEEE. All rights reserved.
This is an unapproved draft, subject to change

Item	Feature	Subclause	Value/Comment	Status	Support
RM47	Setting bit 3.42.4 to a one enables PRBS31 transmit pattern testing if bit 3.32.2 is a one and bit 3.42.3 is not a one	45.2.3.15.2		PCS* PPT:M	Yes [ ] N/A [ ]
RM48	Setting bit 3.42.4 to a zero disables PRBS31 transmit pattern testing	45.2.3.15.2		PCS* PPT:M	Yes [ ] N/A [ ]
RM49	Test-pattern error counter clears to zero on read or reset	45.2.3.16		PCS* CR:M	Yes [ ] N/A [ ]
RM50	Test-pattern error counter holds at all ones at overflow	45.2.3.16		PCS* CR:M	Yes [ ] N/A [ ]
RM51	Bit indicates fault when any PCS register indicates fault	45.2.3.2.1	If sub-type is supported	PCS*EPC:O	Yes [ ] No [ ] N/A [ ]
RM52	Writes to bit 15 are ignored	45.2.3.17	If sub-type is unsupported	PCS*EPC:O	Yes [ ] No [ ] N/A [ ]
RM53	Writing this bit to a one activates the PAF when link is established	45.2.3.18.3		PCS*PAF:M	Yes [ ] N/A [ ]
RM54	Writes to bit are ignored while link is active or initializing or if PAF is not supported	45.2.3.18.3		PCS*PAF:M	Yes [ ] N/A [ ]
RM55	Bits indicate device capabilities upon reset	45.2.3.19		PCS*PAF:M	Yes [ ] N/A [ ]
RM56	Writes to the register through any PCS MMD in the same package effect the register equally	45.2.3.19		PCS*PAF:M	Yes [ ] N/A [ ]
RM57	Single bit set to one and all others cleared to zero when device does not support aggregation of multiple PMEs	45.2.3.19		PCS:M	Yes [ ] N/A [ ]
RM58	PME aggregation used if one or more bits set	45.2.3.20		PCS*PAF:M	Yes [ ] N/A [ ]
RM59	Registers set to all zeros upon reset	45.2.3.20		PCS*PAF:M	Yes [ ] N/A [ ]
RM60	Writes to the register through any PCS MMD in the same package effect the register equally	45.2.3.20		PCS*PAF:M	Yes [ ] N/A [ ]
RM61	Bits reset to zero when read of upon MMD reset	45.2.3.21		PCS*PAF:M	Yes [ ] N/A [ ]
RM62	Bits held to one upon overflow	45.2.3.21		PCS*PAF:M	Yes [ ] N/A [ ]
RM63	Bits reset to zero when read of upon MMD reset	45.2.3.22		PCS*PAF:M	Yes [ ] N/A [ ]
RM64	Bits held to one upon overflow	45.2.3.22		PCS*PAF:M	Yes [ ] N/A [ ]

Copyright © 2005 IEEE. All rights reserved.
This is an unapproved draft, subject to change

Item	Feature	Subclause	Value/Comment	Status	Support
RM65	Bits reset to zero when read of upon MMD reset	45.2.3.23		PCS*PAF:M	Yes [ ] N/A [ ]
RM66	Bits held to one upon overflow	45.2.3.23		PCS*PAF:M	Yes [ ] N/A [ ]
RM67	Bits reset to zero when read of upon MMD reset	45.2.3.24		PCS*PAF:M	Yes [ ] N/A [ ]
RM68	Bits held to one upon overflow	45.2.3.24		PCS*PAF:M	Yes [ ] N/A [ ]
RM69	Bits reset to zero when read of upon MMD reset	45.2.3.25		PCS*PAF:M	Yes [ ] N/A [ ]
RM70	Bits held to one upon overflow	45.2.3.25		PCS*PAF:M	Yes [ ] N/A [ ]
RM71	Bits reset to zero when read of upon MMD reset	45.2.3.26		PCS*PAF:M	Yes [ ] N/A [ ]
RM72	Bits held to one upon overflow	45.2.3.26		PCS*PAF:M	Yes [ ] N/A [ ]
RM73	Bits reset to zero when read of upon MMD reset	45.2.3.27		PCS*PAF:M	Yes [ ] N/A [ ]
RM74	Bits held to one upon overflow	45.2.3.27		PCS*PAF:M	Yes [ ] N/A [ ]
RM75	Bits reset to zero when read of upon MMD reset	45.2.3.28		PCS*PAF:M	Yes [ ] N/A [ ]
RM76	Bits held to one upon overflow	45.2.3.28		PCS*PAF:M	Yes [ ] N/A [ ]

Copyright © 2005 IEEE. All rights reserved.
This is an unapproved draft, subject to change

Copyright © 2005 IEEE. All rights reserved.
This is an unapproved draft, subject to change

55. Physical Coding Sublayer (PCS), Physical Medium Attachment (PMA) sublayer and baseband medium, type 10GBASE-T

55.1 Overview

The 10GBASE-T PHY is one of the 10 Gigabit Ethernet family of high-speed CSMA/CD network specifications. The 10GBASE-T Physical Coding Sublayer (PCS), Physical Medium Attachment (PMA) and baseband medium specifications are intended for users who want 10 Gb/s performance over balanced twisted-pair structured cabling systems. 10GBASE-T signaling requires four pairs of balanced cabling, as specified in ISO/IEC 11801 Edition 2 with appropriate augmentation as specified in 55.7. It is recommended that the guidelines (proposed) in ANSI/TIA TSB 155 and ANSI/TIA 568-B.2-10 and ISO/IEC 11801 Edition 2.1 be considered before the installation of 10GBASE-T equipment for any cabling system.

This clause defines the type 10GBASE-T PCS, type 10GBASE-T PMA sublayer, and type 10GBASE-T Medium Dependent Interface (MDI). Together, the PCS and the PMA sublayer define a 10GBASE-T Physical layer (PHY). Functional, electrical and mechanical specifications for the type 10GBASE-T PCS, PMA, and MDI are provided in this document. This clause also specifies the baseband medium used with 10GBASE-T.

55.1.1 Objectives

The following are the objectives of 10GBASE-T:

a) Support full duplex operation only
b) Support star-wired local area networks using point-to-point links and structured cabling topologies.
c) Support a speed of 10.000 Gb/s at the MAC/PLS service interface.
d) Support copper medium from ISO/IEC 11801:2002, with appropriate augmentation as specified in 55.7
e) Support operation over 4-connector structured 4-pair, twisted copper cabling for all supported distances and Classes.
f) Define a single 10Gb/s PHY that would support links of at least 55 m to 100 m on four pair balanced copper cabling as specified in 55.7
g) Preserve the 802.3/Ethernet frame format at the MAC Client service Interface.
h) Preserve minimum and maximum frame size of the current 802.3 Standard.
i) Support Auto-Negotiation (Clause 28).
j) Meet CISPR/FCC Class A EMC limits.
k) Support a Bit Error Rate of less than or equal to 10^{-12} on all supported distances and Classes

Editor's Note: When the extrapolation of the Class E specifications specified in Clause 55.7 is incorporated into the appropriate TIA/ISO/IEC specifications, we will pull in references to these in here. Frequency extrapolation of the Class E specification is already available in the TR-42 Draft Technical Report entitled "Assessment of installed class E and class F cabling performance beyond their maximum specified frequencies.

Copyright © 2005 IEEE. All rights reserved.

55.1.2 Relationship of 10GBASE-T to other standards

Relations between the 10GBASE-T PHY, the ISO Open Systems Interconnection (OSI) Reference Model, and the IEEE 802.3 CSMA/CD LAN Model are shown in Figure 55–1. The PHY sub-layers (shown shaded) in Figure 55–1 connect one Clause 4 Media Access Control (MAC) layer to the medium.

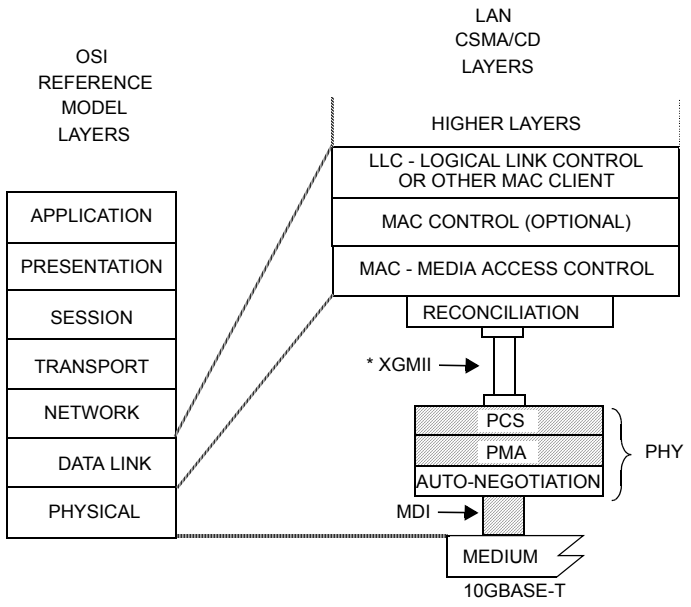

MDI = MEDIUM DEPENDENT INTERFACE
XGMII = TEN GIGABIT MEDIA INDEPENDENT INTERFACE
PCS = PHYSICAL CODING SUBLAYER
PMA = PHYSICAL MEDIUM ATTACHMENT
PHY = PHYSICAL LAYER DEVICE

*XGMII is optional.

Figure 55–1—Type 10GBASE-T PHY relationship to the ISO Open Systems Interconnection (OSI) Reference Model and the IEEE 802.3 CSMA/CD LAN Model

55.1.3 Operation of 10GBASE-T

The 10GBASE-T PHY employs full duplex baseband transmission over four pairs of balanced cabling. The aggregate data rate of 10 Gb/s is achieved by transmitting over each wire pair 2500 Mb/s, as shown in Figure 55–2. Hybrids and cancellers are employed to enable simultaneous transmission in both directions. Baseband 16-level PAM signaling with a modulation rate of 800 Msymbols per second is used on each of the wire pairs. Ethernet data and control characters are encoded at a rate of 3.125 information bits per PAM16 symbol, along with auxiliary channel bits. Two consecutively transmitted PAM16 symbols are considered as one two-dimensional (2D) symbol. The 2D symbols are selected from a constrained constellation of 128 maximally spaced 2D symbols, called DSQ128 (Double SQuare). After link start-up, PHY frames consisting of 512 DSQ128 symbols are continuously transmitted. The DSQ128 symbols are determined by 7-bit labels, each comprising 3 uncoded bits and 4 LDPC-encoded bits. The 512 DSQ128 symbols of one PHY frame are transmitted as 4 x 256 PAM16 symbols over the four wire pairs. Data and Control symbols are embedded in a framing scheme which runs continuously after startup of the link. The modulation symbol rate of 800 Msymbols/s results in a symbol period of 1.25 ns.

A 10GBASE-T PHY can be configured either as a MASTER PHY or as a SLAVE PHY. The MASTER-SLAVE relationship between two stations sharing a link segment is established during Auto-Negotiation (see Clause 28, 55.6, Annex 28B, Annex 28C and Annex 28D). The MASTER PHY uses a local clock to determine the timing of transmitter operations. The MASTER/SLAVE relationship may include

 Copyright © 2005 IEEE. All rights reserved.

loop timing. If loop timing is implemented, the SLAVE PHY recovers the clock from the received signal and uses it to determine the timing of transmitter operations, i.e., it performs loop timing, as illustrated in Figure 55–3. If loop timing is not implemented, the SLAVE PHY clocking is identical to the MASTER PHY clocking. In a multiport to single-port connection, the multiport device is typically set to be MASTER and the single-port device is set to be SLAVE.

The PCS and PMA subclauses of this document are summarized in 55.1.3.1 and 55.1.3.2. Figure 55–3 shows the functional block diagram.

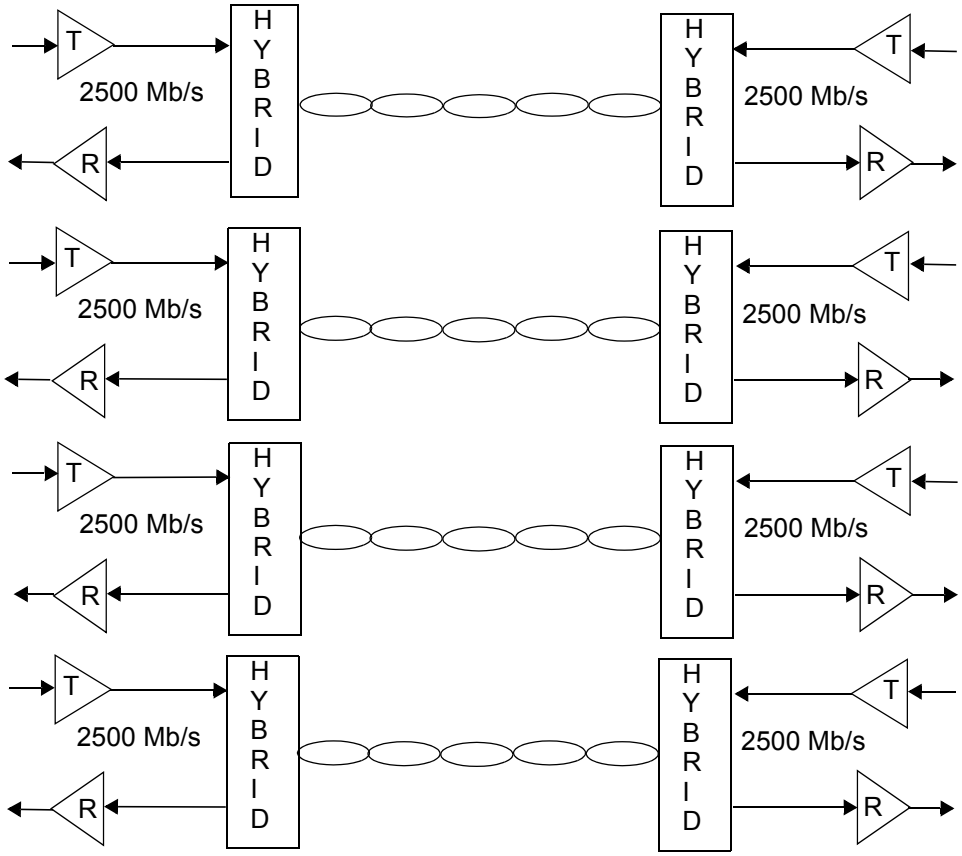

Figure 55–2—10GBASE-T topology

Copyright © 2005 IEEE. All rights reserved.

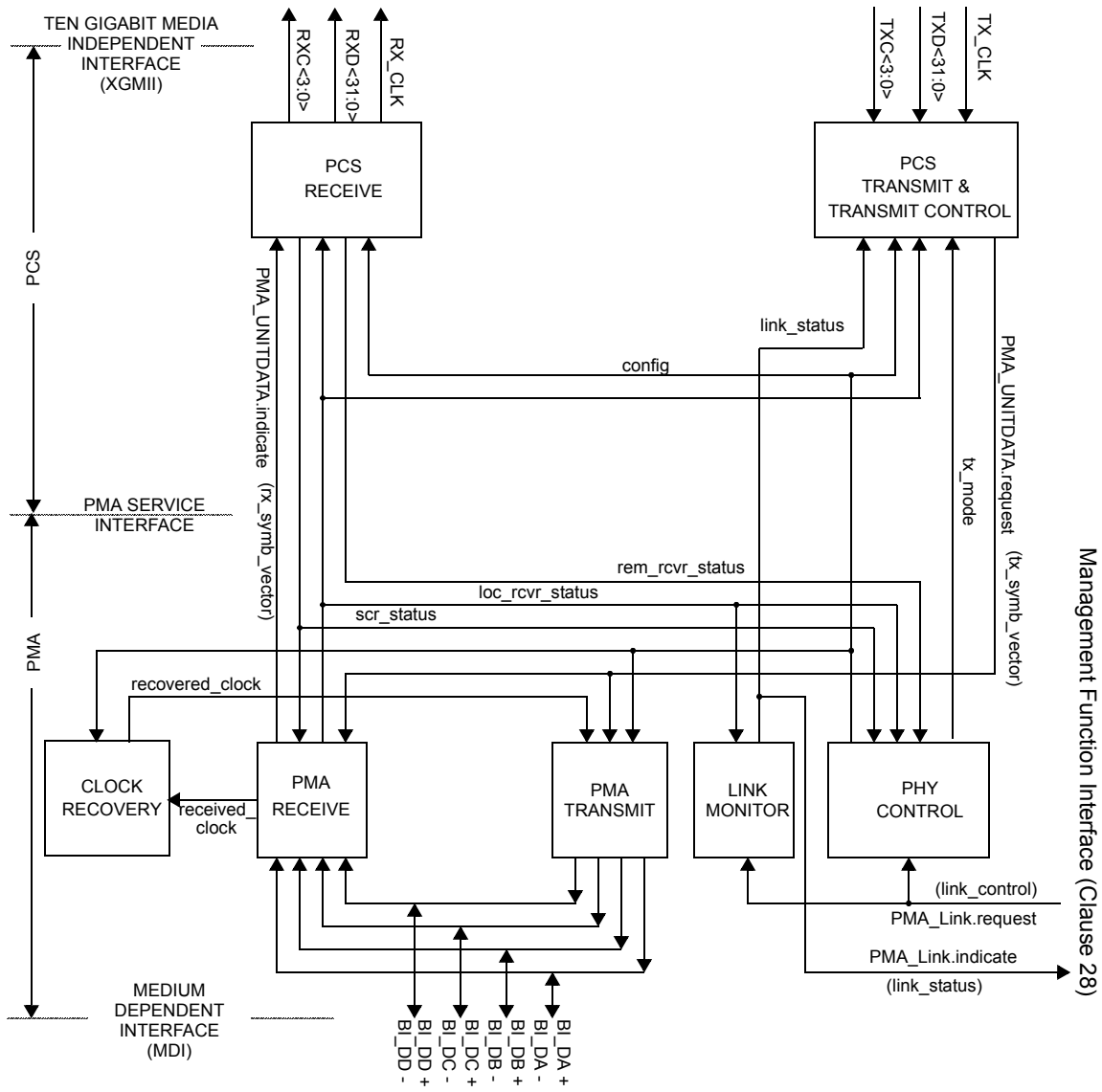

Figure 55–3—Functional block diagram

NOTE—The recovered_clock arc is shown to indicate delivery of the received clock signal back to PMA TRANSMIT for loop timing.

 Copyright © 2005 IEEE. All rights reserved.

55.1.3.1 Physical Coding Sublayer (PCS)

The 10GBASE-T PCS couples a Ten Gigabit Media Independent Interface (XGMII), as described in Clause 46, to the 10GBASE-T Physical Medium Attachment (PMA) sublayer.

In the transmit direction, in normal mode, the PCS receives eight XGMII data octets provided by two consecutive transfers on the XGMII service interface on TXD<31:0> and groups them into 64-bit blocks with the 64-bit block boundaries aligned with the boundary of the two XGMII transfers. Each group of eight octets along with the data/control indications is transcoded into a 65-bit block. The resulting 65-bit blocks are assembled in a group of 50 blocks and scrambled. Adding CRC-8 check bits yields a CRC-checked Ethernet payload of 50x65+8 = 3258 bits. An auxiliary channel bit is added to obtain a block of 3259 bits. 1723 bits are encoded using a systematic LDPC(1723,2048) encoder, which adds 325 LDPC check bits.

The 3259 bits are divided into 3x512 bits and 1723 bits. The 3x512 bits, among them the auxiliary channel bit, remain uncoded. The 1723 bits are encoded by a systematic LDPC(1723,2048) encoder, which adds 325 LDPC check bits to form an LDPC codeword of 2048 coded bits. The 3x512 uncoded bits and the 2048 = 4x512 coded bits are arranged in a frame of 512 7-bit labels. Each 7-bit label comprises 3 uncoded bits and 4 coded bits.

The 512 7-bit labels are mapped into 512 2D modulation symbols selected from a constellation called DSQ128. The DSQ128 symbols are obtained by concatenating two 1D 16-PAM symbols and retaining among the 256 possible combinations 128 maximally spaced 2D symbols.

The DSQ128 constellation is partitioned into 16 subsets, each subset containing 8 maximally spaced 2D symbols. The 4 coded bits of each 7-bit label select one DSQ128 subset, and the 3 uncoded bits of the label select one 2D symbol in this subset.

The obtained PHY frame of 512 DSQ128 symbols is passed on to the PMA as PMA_UNITDATA.request. The PMA transmits the DSQ128 symbols over the four wire pairs in the form of 256 constituent PAM16 symbols per pair. Details of the PCS function are covered in 55.3.

In the receive direction, in normal mode, the PCS processes code-groups received from the remote PHY via the PMA in 256 4D symbol blocks and maps them to the XGMII service interface in the receive path. In this receive processing scheme, symbol clock synchronization is done by the PMA receive function.

In addition to the normal mode of operation, the PCS supports a training mode. Furthermore, the PCS contains a management interface.

The PCS functions and state diagrams are specified in 55.3. The signals provided by the PCS at the XGMII conform to the interface requirements of Clause 46. The PCS Service Interfaces to the XGMII and the PMA are abstract message-passing interfaces specified in 55.2.

55.1.3.2 Physical Medium Attachment (PMA) sublayer

The PMA couples messages from the PCS service interface onto the balanced cabling physical medium via the Medium Dependent Interface (MDI) and provides the link management and PHY Control functions. The PMA provides full duplex communications at 800 Msymbols/s over four pairs of balanced cabling up to 100 m in length.

The PMA Transmit function comprises four transmitters to generate continuous time analog signals on each of the four pairs BI_DA, BI_DB, BI_DC and BI_DD, as described in 55.4.3.1. In normal mode, each four dimensional symbol received from the PCS transmit function undergoes multiple stages of processing. First the symbol goes through a Tomlinson Harashima Precoder (THP) which maps the 1DSQ128 input in each dimension of the four dimensional symbol into a quasi-continuous discrete time value in the range (-16, 16].

Copyright © 2005 IEEE. All rights reserved.

This THP processed four dimensional symbol stream is then passed on to four digital to analog converters (DACs). Each DAC outputs may be further processed with continuous time filters to roll off the high frequency spectral response to limit high frequency emissions and are then applied to the four balanced pairs via the MDI port.

The PMA Receive function comprises four independent receivers for pulse-amplitude modulated signals on each of the four pairs BI_DA, BI_DB, BI_DC and BI_DD, as described in 55.4.3.2. The receivers are responsible for acquiring symbol timing and, when operating in normal mode, for cancelling echo, near end cross talk, far end cross talk and equalizing the signal. The 4-D symbols are provided to the PCS receive function via the PMA_UNITDATA.indicate message. The PMA also contains functions for Link Monitor.

The PMA PHY Control function generates signals that control the PCS and PMA sublayer operations. PHY Control begins following the completion of Auto-Negotiation and provides the start-up functions required for successful 10GBASE-T operation. It determines whether the PHY operates in a normal state, enabling data transmission over the link segment, or whether the PHY sends special PAM2 code-groups that are used in the training mode. The latter occurs when either one or both of the PHYs that share a link segment are not operating reliably.

PMA functions and state diagrams are specified in 55.4. PMA electrical specifications are given in 55.5.

55.1.4 Signaling

10GBASE-T signaling is performed by the PCS generating continuous code-group sequences that the PMA transmits over each wire pair. The signaling scheme achieves a number of objectives including

a) Forward Error Correction (FEC) coded symbol mapping for data.
b) Algorithmic mapping from TXD<31:0> and TXC<3:0> to four dimensional symbols in the transmit path.
c) Algorithmic mapping from the received four dimensional signals on the MDI port to RXD<31:0> and RXC<3:0> on the XGMII interface.
d) Uncorrelated symbols in the transmitted symbol stream.
e) No correlation between symbol streams traveling both directions on any pair combination.
f) No correlation between symbol streams on pairs BI_DA, BI_DB, BI_DC, and BI_DD.
g) Block framing and other control signals.
h) Ability to signal the status of the local receiver to the remote PHY to indicate that the local receiver is not operating reliably and requires retraining.
i) Ability to automatically detect and correct for pair swapping and unexpected crossover connections.
j) Ability to automatically detect and correct for incorrect polarity in the connections.
k) Ability to automatically correct for differential delay variations across the wire-pairs.

The PHY operates in two basic modes, normal mode or training mode. In normal mode, PCS generates a continuous stream of four dimensional symbols that are transmitted via the PMA at one of eight power levels. In training mode, the PCS is directed to generate only PAM2 symbols for transmission by the PMA, which enable the receiver at the other end to train until it is ready to operate in normal mode. (See the PCS reference diagram in 55.2.)

55.1.5 Interfaces

All 10GBase-T PHY implementations must be compatible at the MDI and at a physically exposed XGMII, if made available. When the PHY is incorporated within the physical bounds of a single-port device or a multi-port device, physical implementation of the XGMII is optional. Designers are free to implement circuitry within the PCS and PMA in an application-dependent manner provided that the MDI and XGMII (if

 Copyright © 2005 IEEE. All rights reserved.

the XGMII is implemented) specifications are met. System operation from the perspective of signals at the MDI and management objects are identical whether the XGMII is implemented or not.

55.1.6 Conventions in this clause

The body of this clause contains state diagrams, including definitions of variables, constants, and functions. Should there be a discrepancy between a state diagram and descriptive text, the state diagram prevails.

The notation used in the state diagrams follows the conventions of 21.5.

The values of all components in test circuits shall be accurate to within ±1% unless otherwise stated.

Default initializations, unless specifically specified, are left to the implementor.

55.2 10GBASE-T Service Primitives and Interfaces

10GBASE-T transfers data and control information across the following four service interfaces:

a) Ten Gigabit Media Independent Interface (XGMII)
b) Management Function Interface
c) PMA Service Interface
d) Medium Dependent Interface (MDI)

The XGMII is specified in Clause 46; the Management Function Interface is specified in Clause 45. The PMA Service Interface is defined in 55.2.2 and the MDI is defined in 55.8.

55.2.1 Management Function Interface

10GBASE-T uses the following service primitives to exchange status indications and control signals across the Management Function Interface as specified in Clause 28:

PMA_LINK.request (link_control)

PMA_LINK.indicate (link_status)

55.2.1.1 PMA_LINK.request

This primitive allows the Auto-Negotiation algorithm to enable and disable operation of the PMA as specified in 28.2.6.2.

55.2.1.1.1 Semantics of the primitive

PMA_LINK.request (link_control)

The link_control parameter can take on one of three values: SCAN_FOR_CARRIER, DISABLE, or ENABLE.

SCAN_FOR_CARRIER	Used by the Auto-Negotiation algorithm prior to receiving any fast link pulses. During this mode the PMA reports link_status=FAIL. PHY processes are disabled.
DISABLE	Set by the Auto-Negotiation algorithm in the event fast link pulses are detected. PHY processes are disabled. This allows the Auto-Negotiation algorithm to determine how to configure the link.

Copyright © 2005 IEEE. All rights reserved.

ENABLE	Used by Auto-Negotiation to turn control over to the PHY for data processing functions.

55.2.1.1.2 When generated

Auto-Negotiation generates this primitive to indicate a change in link_control as described in Clause 28.

55.2.1.1.3 Effect of receipt

This primitive affects operation of the PMA Link Monitor function as defined in 55.4.2.5.

55.2.1.2 PMA_LINK.indicate

This primitive is generated by the PMA to indicate the status of the underlying medium as specified in 28.2.6.1. This primitive informs the PCS, PMA PHY Control function, and the Auto-Negotiation algorithm about the status of the underlying link.

55.2.1.2.1 Semantics of the primitive

PMA_LINK.indicate (link_status)

The link_status parameter can take on one of three values: FAIL, READY, or OK.

FAIL	No valid link established.
READY	For 10GBASE-T link_status does not take the value READY.
OK	The Link Monitor function indicates that a valid 10GBASE-T link is established. Reliable reception of signals transmitted from the remote PHY is possible.

55.2.1.2.2 When generated

The PMA generates this primitive continuously to indicate the value of link_status in compliance with the state diagram given in Figure 55–19.

55.2.1.2.3 Effect of receipt

The effect of receipt of this primitive is specified in 55.3.17.2.

55.2.2 PMA Service Interface

10GBASE-T uses the following service primitives to exchange symbol vectors, status indications, and control signals across the service interfaces:

PMA_TXMODE.indicate (tx_mode)

PMA_CONFIG.indicate (config)

PMA_UNITDATA.request (tx_symb_vector)

PMA_UNITDATA.indicate (rx_symb_vector)

PMA_SCRSTATUS.request (scr_status)

PMA_RXSTATUS.indicate (loc_rcvr_status)

PMA_REMRXSTATUS.request (rem_rcvr_status)

PMA_RESET.indicate (pma_reset)

 Copyright © 2005 IEEE. All rights reserved.

The use of these primitives is illustrated in Figure 55–4.

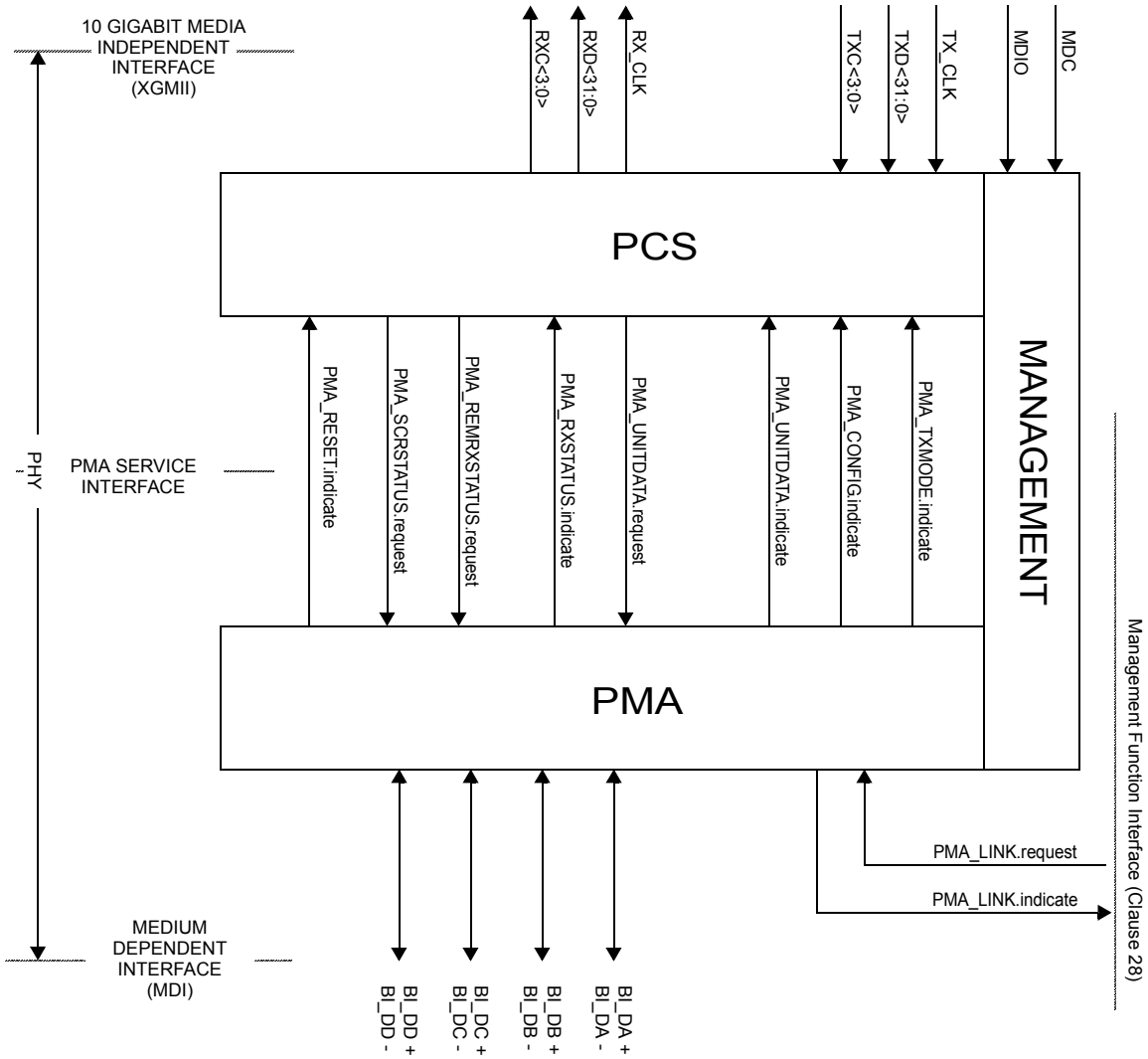

Figure 55–4—10GBASE-T service interfaces

55.2.3 PMA_TXMODE.indicate

The transmitter in a 10GBASE-T link normally sends over the four pairs, four dimensional symbols that represent an XGMII data stream with framing, scrambling and encoding of data, control information, or idles.

55.2.3.1 Semantics of the primitive

PMA_TXMODE.indicate (tx_mode)

PMA_TXMODE.indicate specifies to PCS Transmit via the parameter tx_mode what sequence of code-groups the PCS should be transmitting. The parameter tx_mode can take on one of the following three values of the form:

Copyright © 2005 IEEE. All rights reserved.

SEND_N	This value is continuously asserted when transmission of sequences of four dimensional symbols representing an XGMII data stream in normal mode.
SEND_T	This value is continuously asserted in case transmission of sequences of code-groups representing the startup mode is to take place.
SEND_Z	This value is continuously asserted in case transmission of zeros is required.

55.2.3.2 When generated

The PMA PHY Control function generates PMA_TXMODE.indicate messages continuously.

55.2.3.3 Effect of receipt

Upon receipt of this primitive, the PCS performs its Transmit function as described in 55.3.2.2.

55.2.4 PMA_CONFIG.indicate

Each PHY in a 10GBASE-T link is capable of operating as a MASTER PHY and as a SLAVE PHY. MASTER-SLAVE configuration is determined during Auto-Negotiation (55.6.1). The result of this negotiation is provided to the PMA.

55.2.4.1 Semantics of the primitive

PMA_CONFIG.indicate (config)

PMA_CONFIG.indicate specifies to PCS and PMA Transmit via the parameter config whether the PHY must operate as a MASTER PHY or as a SLAVE PHY and the power backoff level at which the transmitter shall operate. The parameter config can take on one of the following two values of the form:

MASTER	This value is continuously asserted when the PHY must operate as a MASTER PHY.
SLAVE	This value is continuously asserted when the PHY must operate as a SLAVE PHY.

55.2.4.2 When generated

PMA generates PMA_CONFIG.indicate messages continuously.

55.2.4.3 Effect of receipt

PCS and PMA Clock Recovery perform their functions in MASTER or SLAVE configuration according to the value assumed by the parameter config.

55.2.5 PMA_UNITDATA.request

This primitive defines the transfer of code-groups in the form of the tx_symb_vector parameter from the PCS to the PMA. The code-groups are obtained in the PCS Transmit function using the encoding rules defined in 55.3.2.2 to represent XGMII data and control streams or other sequences.

55.2.5.1 Semantics of the primitive

PMA_UNITDATA.request (tx_symb_vector)

 Copyright © 2005 IEEE. All rights reserved.

During transmission, the PMA_UNITDATA.request simultaneously conveys to the PMA via the parameter tx_symb_vector the value of the symbols to be sent over each of the four transmit pairs BI_DA, BI_DB, BI_DC, and BI_DD. The tx_symb_vector parameter takes on the form:

SYMB_4D A vector of four multi-level symbols, one for each of the four transmit pairs BI_DA, BI_DB, BI_DC, and BI_DD. Each symbol may take on one of the values in the set {-15,-13,-11,-9, -7, -5, -3, -1, 1, 3, 5, 7, 9, 11,13,15}.

The symbols that are elements of tx_symb_vector are called, according to the pair on which each will be transmitted, tx_symb_vector[BI_DA], tx_symb_vector[BI_DB], tx_symb_vector[BI_DC], and tx_symb_vector[BI_DD].

55.2.5.2 When generated

The PCS generates PMA_UNITDATA.request (SYMB_4D) synchronously with every transmit clock cycle.

55.2.5.3 Effect of receipt

Upon receipt of this primitive the PMA transmits on the MDI the signals corresponding to the indicated symbols after processing with the Tomlinson Harashima Precoder (THP), the transmit filter and other specified PMA transmit processing. The parameter tx_symb_vector is also used by the PMA Receive function to process the signals received on pairs BI_DA, BI_DB, BI_DC, and BI_DD for cancelling the echo and Near End Cross Talk (NEXT).

55.2.6 PMA_UNITDATA.indicate

This primitive defines the transfer of code-groups in the form of the rx_symb_vector parameter from the PMA to the PCS.

55.2.6.1 Semantics of the primitive

PMA_UNITDATA.indicate (rx_symb_vector)

During reception the PMA_UNITDATA.indicate simultaneously conveys to the PCS via the parameter rx_symb_vector the values of the symbols detected on each of the four receive pairs BI_DA, BI_DB, BI_DC, and BI_DD. The rx_symb_vector parameter takes on the form:

SYMB_4D A vector of the four 1-D symbols that is the receiver's best estimate of the symbols that were sent by the remote transmitter across the four pairs.

55.2.6.2 When generated

The PMA generates PMA_UNITDATA.indicate(SYMB_4D) messages synchronously every 4 symbols received at the MDI. The nominal rate of the PMA_UNITDATA.indicate primitive is 800 MHz, as governed by the recovered clock.

55.2.6.3 Effect of receipt

The effect of receipt of this primitive is unspecified.

Copyright © 2005 IEEE. All rights reserved.

55.2.7 PMA_SCRSTATUS.request

This primitive is generated by PCS Receive to communicate the status of the descrambler for the local PHY. The parameter scr_status conveys to the PMA Receive function the information that the training mode descrambler has achieved synchronization.

55.2.7.1 Semantics of the primitive

PMA_SCRSTATUS.request (scr_status)

The scr_status parameter can take on one of two values of the form:

OK	The training mode descrambler has achieved synchronization.
NOT_OK	The training mode descrambler is not synchronized.

55.2.7.2 When generated

PCS Receive generates PMA_SCRSTATUS.request messages continuously.

55.2.7.3 Effect of receipt

The effect of receipt of this primitive is specified in 55.4.2.3, 55.4.2.4, and 55.4.6.1.

55.2.8 PMA_RXSTATUS.indicate

This primitive is generated by PMA Receive to indicate the status of the receive link at the local PHY. The parameter loc_rcvr_status conveys to the PCS Transmit, PCS Receive, PMA PHY Control function, and Link Monitor the information on whether the status of the overall receive link is satisfactory or not. Note that loc_rcvr_status is used by the PCS Receive decoding functions. The criterion for setting the parameter loc_rcvr_status is left to the implementor. It can be based, for example, on observing the mean-square error at the decision point of the receiver and detecting errors during reception of symbol streams.

55.2.8.1 Semantics of the primitive

PMA_RXSTATUS.indicate (loc_rcvr_status)

The loc_rcvr_status parameter can take on one of two values of the form:

OK	This value is asserted and remains true during reliable operation of the receive link for the local PHY.
NOT_OK	This value is asserted whenever operation of the link for the local PHY is unreliable.

55.2.8.2 When generated

PMA Receive generates PMA_RXSTATUS.indicate messages continuously on the basis of signals received at the MDI.

55.2.8.3 Effect of receipt

The effect of receipt of this primitive is specified in Figure 55–18 and in subclauses 55.2 and 55.4.6.2.

 Copyright © 2005 IEEE. All rights reserved.

55.2.9 PMA_REMRXSTATUS.request

This primitive is generated by PCS Receive to indicate the status of the receive link at the remote PHY as communicated by the remote PHY via its encoding of its loc_rcvr_status parameter. The parameter rem_rcvr_status conveys to the PMA PHY Control function the information on whether reliable operation of the remote PHY is detected or not. The criterion for setting the parameter rem_rcvr_status is left to the implementor. It can be based, for example, on asserting rem_rcvr_status is NOT_OK until loc_rcvr_status is OK and then asserting the detected value of rem_rcvr_status after proper PCS receive decoding is achieved.

55.2.9.1 Semantics of the primitive

PMA_REMRXSTATUS.request (rem_rcvr_status)

The rem_rcvr_status parameter can take on one of two values of the form:

OK	The receive link for the remote PHY is operating reliably.
NOT_OK	Reliable operation of the receive link for the remote PHY is not detected.

55.2.9.2 When generated

The PCS generates PMA_REMRXSTATUS.request messages continuously on the basis on signals received at the MDI.

55.2.9.3 Effect of receipt

The effect of receipt of this primitive is specified in Figure 55–18.

55.2.10 PMA_RESET.indicate

This primitive is used to pass the PMA Reset function to the PCS (pcs_reset=ON) when reset is enabled.

The PMA_RESET.indicate primitive can take on one of two values:

TRUE	Reset is enabled.
FALSE	Reset is not enabled.

55.2.10.1 When generated

The PMA Reset function is executed as described in 55.4.2.1.

55.2.10.2 Effect of receipt

The effect of receipt of this primitive is specified in 55.4.2.1.

55.3 Physical Coding Sublayer (PCS)

55.3.1 PCS service interface (XGMII)

The PCS service interface allows the 10GBASE-T PCS to transfer information to and from a PCS client. The PCS Interface is precisely defined as the 10 Gigabit Media Independent Interface (XGMII) in Clause 46.

Copyright © 2005 IEEE. All rights reserved.

55.3.2 PCS functions

The PCS comprises one PCS Reset function and two simultaneous and asynchronous operating functions. The PCS operating functions are: PCS Transmit and PCS Receive. All operating functions start immediately after the successful completion of the PCS Reset function.

The PCS reference diagram, Figure 55–5, shows how the two operating functions relate to the messages of the PCS-PMA interface. Connections from the management interface (signals MDC and MDIO) to other layers are pervasive, and are not shown in Figure 55–5. Management is specified in Clause 30.

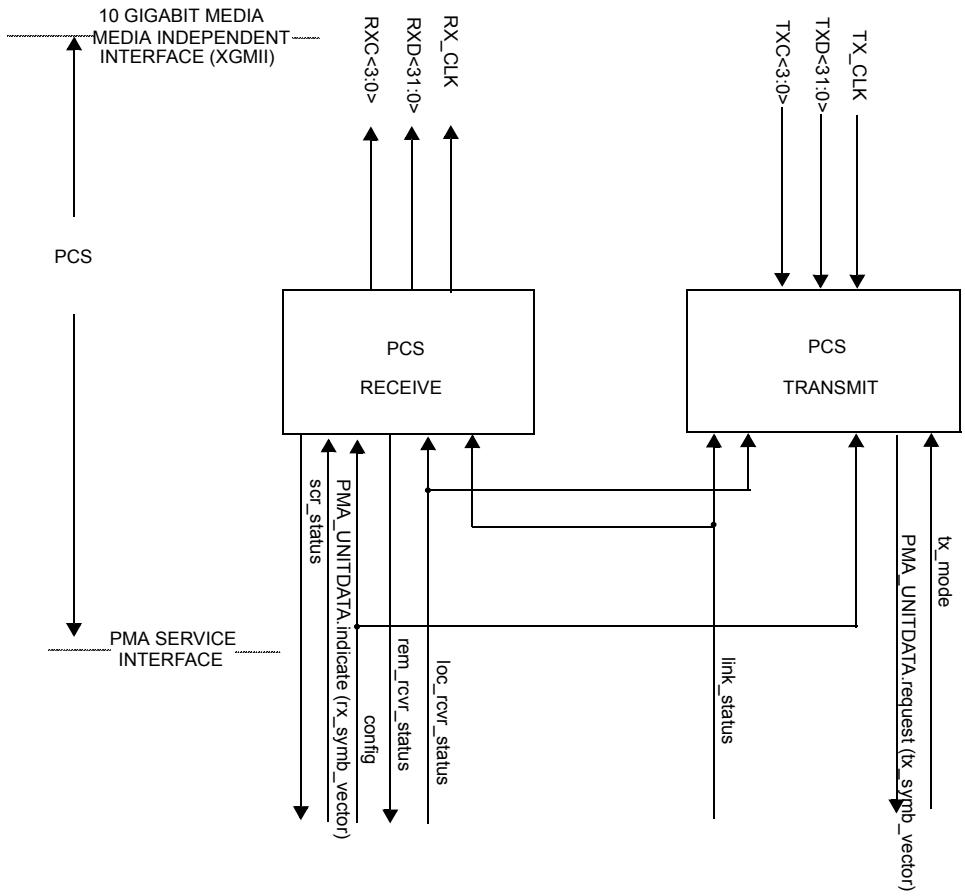

Figure 55–5—PCS reference diagram

55.3.2.1 PCS Reset function

PCS Reset initializes all PCS functions. The PCS Reset function shall be executed whenever one of the following conditions occur:

a) Power on (see 55.3.17.2.2).
b) The receipt of a request for reset from the management entity.

 Copyright © 2005 IEEE. All rights reserved.

PCS Reset sets pcs_reset=ON while any of the above reset conditions hold true. All state diagrams take the open-ended pcs_reset branch upon execution of PCS Reset. The reference diagrams do not explicitly show the PCS Reset function.

55.3.2.2 PCS Transmit function

The PCS Transmit function shall conform to the PCS Transmit state diagram in Figure 55–15.

When communicating with the XGMII, the PCS uses a four octet-wide, synchronous data path, with packet delimiting being provided by transmit control signals and receive control signals. Alignment to 64B/65B is performed in the PCS. The PMA sublayer operates independently of block and packet boundaries. The PCS provides the functions necessary to map packets between the XGMII format and the PMA service interface format.

When the transmit channel is in normal mode, the PCS Transmit process continuously generates 65B blocks based upon the TXD <31:0> and TXC <3:0> signals on the XGMII. The subsequent functions of the PCS Transmit process then pack the resulting blocks, and split the bits into the uncoded set and the coded set which is processed by a Low Density Parity Check (LDPC) and then joint mapped into a transmit LDPC frame of DSQ (Double Square) symbols. Transmit data-units are sent to the PMA or service interface via the PMA_UNITDATA.request primitive, respectively.

When the receive channel is in training mode, the PCS Synchronization process continuously monitors PMA_RXSTATUS.indicate(loc_rcvr_status). When loc_rcvr_status indicates OK, then the PCS Synchronization process accepts data-units via the PMA_UNITDATA.request primitive. It attains frame and block synchronization based on the PMA training frames and conveys received blocks to the PCS Receive process. The PCS Synchronization process sets the block_lock flag to indicate whether the PCS has obtained synchronization. When the PCS Synchronization process is synchronized to the PMA Training 1 bit pattern on pair A every 256 PAM2 symbols which is aligned with the PCS PHY frame boundary, block_lock is asserted.

When the PCS Synchronization process has obtained synchronization, the LDPC Frame Error Rate (LFER) monitor process monitors the signal quality asserting hi_lfer if excessive LDPC frame errors are detected (LDPC parity error or CRC8 error). If 40 consecutive LDPC frame errors are detected the block_lock flag is de-asserted. When block_lock is asserted and hi_lfer is de-asserted, the PCS Receive process continuously accepts blocks. The PCS Receive process monitors these blocks and generates RXD <31:0> and RXC <3:0> on the XGMII.

In each symbol period, when communicating with the PMA, the PCS Transmit generates a code-group (A_n, B_n, C_n, D_n) that is transferred to the PMA via the PMA_UNITDATA.request primitive. The PMA transmits symbols A_n, B_n, C_n, D_n over wire-pairs BI_DA, BI_DB, BI_DC, and BI_DD respectively. The integer, n, is a time index that is introduced to establish a temporal relationship between different symbol periods. A symbol period, T, is 1.25 ns.

If a PMA_TXMODE.indicate message has the value SEND_Z, PCS Transmit passes a vector of zeros at each symbol period to the PMA via the PMA_UNITDATA.request primitive.

If a PMA_TXMODE.indicate message has the value SEND_T, PCS Transmit generates sequences of code-groups according to the encoding rule in training mode. Special code-groups that use only the values {-9, 9} are transmitted in this case. This value keeps the power in the training mode the same as the power in normal mode. Training mode encoding also takes into account the value of the parameter loc_rcvr_status. By this mechanism, a PHY indicates the status of its own receiver to the link partner.

In the normal mode of operation, the PMA_TXMODE.indicate message has the value SEND_N, and the PCS Transmit function uses a 65B-LDPC coding technique to generate at each symbol period code-groups

Copyright © 2005 IEEE. All rights reserved.

that represent data or control. During transmission, the 65B bits are scrambled by the PCS using a PCS scrambler, a 8 CRC check bits and an auxiliary channel bit are added, then data frames are encoded into a code-group of four dimensional symbols and transferred to the PMA. During data encoding, PCS Transmit utilizes a LDPC frame encoder.

55.3.3 Use of blocks

The PCS maps XGMII signals into 65-bit blocks inserted into an LDPC frame, and vice versa, using a 65B-LDPC coding scheme. The PAM2 PMA training frame synchronization allow establishment of LDPC frame and 65B boundaries by the PCS Synchronization process. Blocks and frames are unobservable and have no meaning outside the PCS. The PCS functions ENCODE and DECODE generate, manipulate, and interpret blocks and frames as provided by the rules in 55.3.4.

55.3.4 65B-LDPC transmission code

The PCS uses a transmission code to improve the transmission characteristics of information to be transferred across the link and to support transmission of control and data characters. The encoding defined by the transmission code ensure that sufficient information is present in the PHY bit stream to make clock recovery possible at the receiver. The encoding also preserves the likelihood of detecting any LDPC frame errors that may occur during transmission and reception of information. In addition, the code enables the receiver to achieve PCS synchronization alignment on the incoming PHY bit stream.

The relationship of block bit positions to XGMII, PMA, and other PCS constructs is illustrated in Figure 55–6 for transmit and Figure 55–7 for receive. These figures illustrate the processing of a multiplicity of blocks containing 8 data octets. See 55.3.4.3 for information on how blocks containing control characters are mapped.

55.3.4.1 Notation conventions

For values shown as binary, the leftmost bit is the first transmitted bit.

64B/65B encodes 8 data octets or control characters into a block. Blocks containing control characters also contain a block type field. Data octets are labeled D_0 to D_7. Control characters other than /O/, /S/ and /T/ are labeled C_0 to C_7. The control character for ordered_set is labeled as O_0 or O_4 since it is only valid on the first octet of the XGMII. The control character for start is labeled as S_0 or S_4 for the same reason. The control character for terminate is labeled as T_0 to T_7.

Two consecutive XGMII transfers provide eight characters that are encoded into one 65-bit transmission block. The subscript in the above labels indicates the position of the character in the eight characters from the XGMII transfers.

Contents of block type fields, data octets and control characters are shown as hexadecimal values. The LSB of the hexadecimal value represents the first transmitted bit. For instance, the block type field 0x1e is sent from left to right as 01111000. The bits of a transmitted or received block are labeled TxB<64:0> and RxB<64:0> respectively where TxB<0> and RxB<0> represent the first transmitted bit. The value of the data/ctrl header is shown as a binary value. Binary values are shown with the first transmitted bit (the LSB) on the left.

55.3.4.2 Transmission order

Block bit transmission order is illustrated in Figure 55–6 and Figure 55–8. Note that these figures show the mapping from XGMII to 64B/65B block for a block containing eight data characters.

 Copyright © 2005 IEEE. All rights reserved.

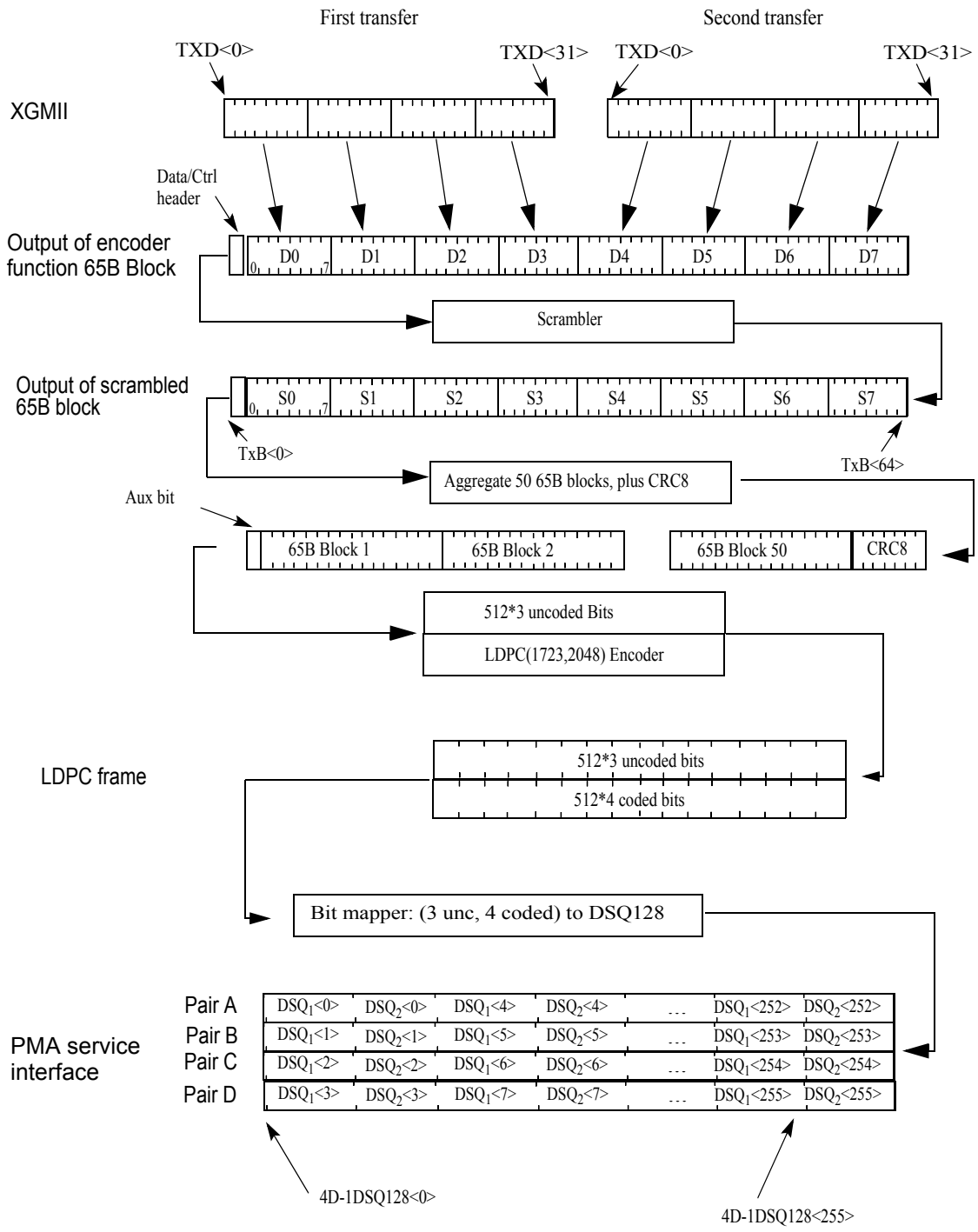

Figure 55–6—PCS Transmit Bit Ordering.

Copyright © 2005 IEEE. All rights reserved.

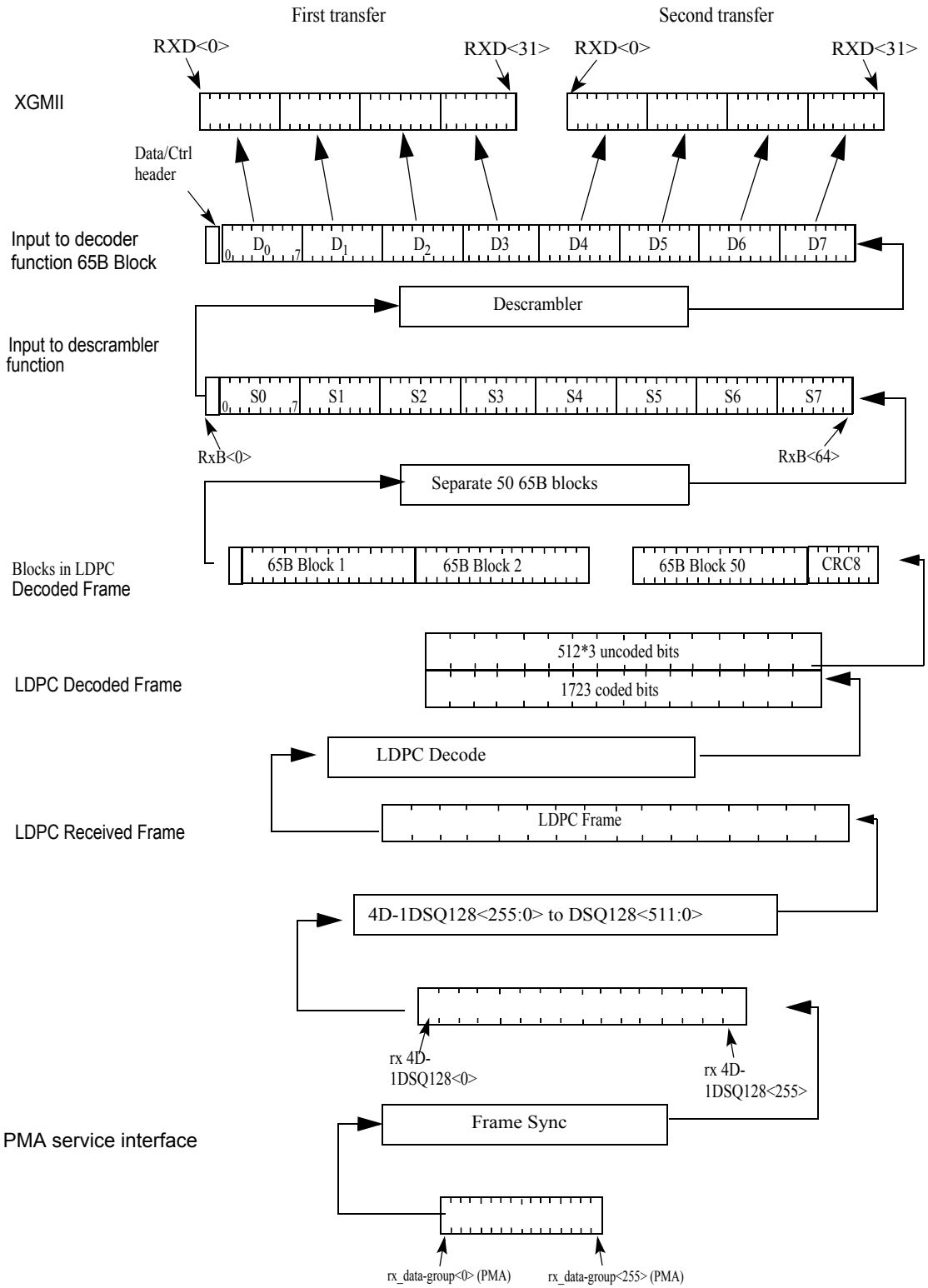

Figure 55–7—PCS Receive Bit Ordering

Copyright © 2005 IEEE. All rights reserved.

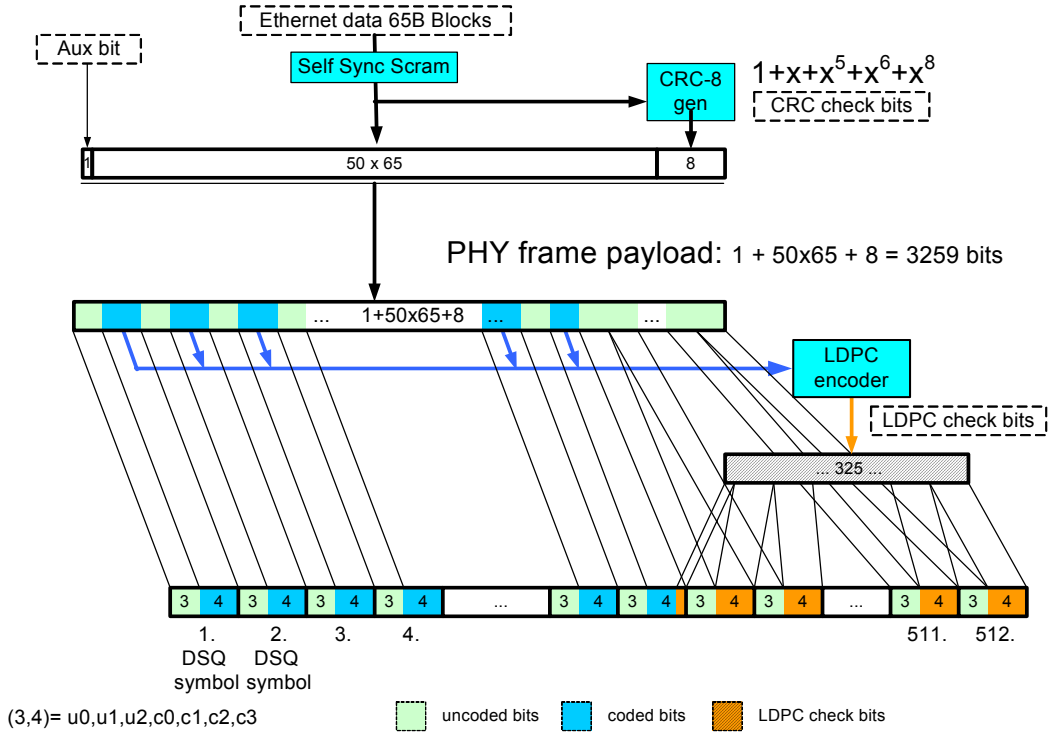

Figure 55–8—PCS Detailed Transmit Bit Ordering

55.3.4.3 Block structure

Blocks consist of 65 bits. The first bit of a block is the data/ctrl header. Blocks are either data blocks or control blocks. The data/ctrl header is 0 for data blocks and 1 for control blocks. The remainder of the block contains the payload.

Data blocks contain eight data characters. Control blocks begin with an 8-bit block type field that indicates the format of the remainder of the block. For control blocks containing a Start or Terminate character, that character is implied by the block type field. Other control characters are encoded in a 7-bit control code or a 4-bit O Code. Each control block contains eight characters.

The format of the blocks is as shown in Figure 55–9. In the figure, the column labeled Input Data shows, in abbreviated form, the eight characters used to create the 65-bit block. These characters are either data characters or control characters and, when transferred across the XGMII interface, the corresponding TXC or RXC bit is set accordingly. Within the Input Data column, D_0 through D_7 are data octets and are transferred with the corresponding TXC or RXC bit set to zero. All other characters are control octets and are transferred with the corresponding TXC or RXC bit set to one. The single bit fields (thin rectangles with no label in the figure) are sent as zero and ignored upon receipt.

Bits and field positions are shown with the least significant bit on the left. Hexadecimal numbers are shown in normal hexadecimal. For example the block type field 0x1e is sent as 01111000 representing bits 1

Copyright © 2005 IEEE. All rights reserved.

through 8 of the 65 bit block. The least significant bit for each field is placed in the lowest numbered position of the field.

All unused values of block type field[3] are reserved.

55.3.4.4 Control codes

The same set of control characters are supported by the XGMII and the 10GBASE-T PCS. The representations of the control characters are the control codes. XGMII encodes a control character into an octet (an eight bit value). The 10GBASE-T PCS encodes the start and terminate control characters implicitly by the block type field. The 10GBASE-T PCS encodes the ordered_set control codes using a combination of the block type field and a 4-bit O code for each ordered_set. The 10GBASE-T PCS encodes each of the other control characters into a 7-bit C code).

The control characters and their mappings to 10GBASE-T control codes and XGMII control codes are specified in Table 55–1. All XGMII and 10GBASE-T control code values that do not appear in the table shall not be transmitted and shall be treated as an error if received.

Input Data	**data ctrl bit**	**Block Payload**							
Bit Position: / **Data Block Format:**	0	1							64
$D_0\,D_1\,D_2\,D_3/D_4\,D_5\,D_6\,D_7$	0	D_0	D_1	D_2	D_3	D_4	D_5	D_6	D_7
Control Block Formats:		**Block Type Field**							
$C_0\,C_1\,C_2\,C_3/C_4\,C_5\,C_6\,C_7$	1	0x1e	C_0	C_1	C_2	C_3	C_4	C_5	C_6	C_7
$C_0\,C_1\,C_2\,C_3/O_4\,D_5\,D_6\,D_7$	1	0x2d	C_0	C_1	C_2	C_3	O_4	D_5	D_6	D_7
$C_0\,C_1\,C_2\,C_3/S_4\,D_5\,D_6\,D_7$	1	0x33	C_0	C_1	C_2	C_3		D_5	D_6	D_7
$O_0\,D_1\,D_2\,D_3/S_4\,D_5\,D_6\,D_7$	1	0x66	D_1	D_2	D_3	O_0		D_5	D_6	D_7
$O_0\,D_1\,D_2\,D_3/O_4\,D_5\,D_6\,D_7$	1	0x55	D_1	D_2	D_3	O_0	O_4	D_5	D_6	D_7
$S_0\,D_1\,D_2\,D_3/D_4\,D_5\,D_6\,D_7$	1	0x78	D_1	D_2	D_3	D_4		D_5	D_6	D_7
$O_0\,D_1\,D_2\,D_3/C_4\,C_5\,C_6\,C_7$	1	0x4b	D_1	D_2	D_3	O_0	C_4	C_5	C_6	C_7
$T_0\,C_1\,C_2\,C_3/C_4\,C_5\,C_6\,C_7$	1	0x87		C_1	C_2	C_3	C_4	C_5	C_6	C_7
$D_0\,T_1\,C_2\,C_3/C_4\,C_5\,C_6\,C_7$	1	0x99	D_0		C_2	C_3	C_4	C_5	C_6	C_7
$D_0\,D_1\,T_2\,C_3/C_4\,C_5\,C_6\,C_7$	1	0xaa	D_0	D_1		C_3	C_4	C_5	C_6	C_7
$D_0\,D_1\,D_2\,T_3/C_4\,C_5\,C_6\,C_7$	1	0xb4	D_0	D_1	D_2		C_4	C_5	C_6	C_7
$D_0\,D_1\,D_2\,D_3/T_4\,C_5\,C_6\,C_7$	1	0xcc	D_0	D_1	D_2	D_3		C_5	C_6	C_7
$D_0\,D_1\,D_2\,D_3/D_4\,T_5\,C_6\,C_7$	1	0xd2	D_0	D_1	D_2	D_3	D_4		C_6	C_7
$D_0\,D_1\,D_2\,D_3/D_4\,D_5\,T_6\,C_7$	1	0xe1	D_0	D_1	D_2	D_3	D_4	D_5		C_7
$D_0\,D_1\,D_2\,D_3/D_4\,D_5\,D_6\,T_7$	1	0xff	D_0	D_1	D_2	D_3	D_4	D_5	D_6

Figure 55–9—64B/65B Block Formats

[3]The block type field values have been chosen to have a 4-bit Hamming distance between them. The only unused value which maintains the Hamming distance is 0x00.

 Copyright © 2005 IEEE. All rights reserved.

55.3.4.5 Ordered sets

Ordered sets are used to extend the ability to send control and status information over the link such as remote fault and local fault status. Ordered sets consist of a control character followed by three data characters. Ordered sets always begin on the first octet of the XGMII. 10 Gigabit Ethernet uses one kind of ordered_set: the sequence ordered_set (see 46.3.4). The sequence ordered_set control character is denoted /Q/. An additional ordered_set, the signal ordered_set, has been reserved and it begins with another control code. The 4-bit O field encodes the control code. See Table 55–1 for the mappings.

55.3.4.6 Valid and invalid blocks

A block is invalid if any of the following conditions exists:

a) The block type field contains a reserved value.
b) Any control character contains a value not in Table 55–1.
c) Any O code contains a value not in Table 55–1.
d) The set of eight XGMII characters does not have a corresponding block format in Figure 55–9.
e) The payload of invalid PHY frame and the first block of the next PHY frame.

55.3.4.7 Idle (/I/)

Idle control characters (/I/) are transmitted when idle control characters are received from the XGMII. Idle characters may be added or deleted by the PCS to adapt between clock rates. /I/ insertion and deletion shall

Copyright © 2005 IEEE. All rights reserved.

occur in groups of 4. /I/s may be added following idle or ordered sets. They shall not be added while data is being received. When deleting /I/s, the first four characters after a /T/ shall not be deleted.

Table 55–1—Control Codes

Control Character	Notation	XGMII Control Code	10GBASE-T Control Code	10GBASE-T O Code	8B/10B Code[a]
idle	/I/	0x07	0x00		K28.0 or K28.3 or K28.5
start	/S/	0xfb	Encoded by block type field		K27.7
terminate	/T/	0xfd	Encoded by block type field		K29.7
error	/E/	0xfe	0x1e		K30.7
Sequence ordered_set	/Q/	0x9c	Encoded by block type field plus O code	0x0	K28.4
reserved0	/R/[b]	0x1c	0x2d		K28.0
reserved1		0x3c	0x33		K28.1
reserved2	/A/	0x7c	0x4b		K28.3
reserved3	/K/	0xbc	0x55		K28.5
reserved4		0xdc	0x66		K28.6
reserved5		0xf7	0x78		K23.7
Signal ordered_set[c]	/Fsig/	0x5c	Encoded by block type field plus O code	0xF	K28.2

[a]For information only. The 8B/10B code is specified in Clause 36. Usage of the 8B/10B code for 10 Gb/s operation is specified in Clause 48.
[b]The codes for /A/, /K/, and /R/ are used on the XAUI interface to signal idle. They are not present on the XGMII when no errors have occurred, but certain bit errors cause the XGXS to send them on the XGMII.
[c]Reserved for INCITS T11 Fibre Channel use.

55.3.4.8 Start (/S/)

The start control character (/S/) indicates the start of a packet. This delimiter is only valid on the first octet of the XGMII (TXD<0:7> and RXD<0:7>). Receipt of an /S/ on any other octet of TxD indicates an error. Block type field values implicitly encode an /S/ as the fifth or first character of the block. These are the only characters of a block on which a start can occur.

55.3.4.9 Terminate (/T/)

The terminate control character (/T/) indicates the end of a packet. Since packets may be any length, the /T/ can occur on any octet of the XGMII interface and within any character of the block. The location of the /T/

 Copyright © 2005 IEEE. All rights reserved.

in the block is implicitly encoded in the block type field. A valid end of packet occurs when a block containing a /T/ is followed by a control block that does not contain a /T/.

55.3.4.10 ordered_set (/O/)

The ordered_set control characters (/O/) indicate the start of an ordered_set. There are two kinds of ordered sets: the sequence ordered_set and the signal ordered_set (which is reserved). When it is necessary to designate the control character for the sequence ordered_set specifically, /Q/ will be used. /O/ is only valid on the first octet of the XGMII. Receipt of an /O/ on any other octet of TXD indicates an error. Block type field values implicitly encode an /O/ as the first or fifth character of the block. The 4-bit O code encodes the specific /O/ character for the ordered_set.

Sequence ordered_sets may be deleted by the PCS to adapt between clock rates. Such deletion shall only occur when two consecutive sequence ordered sets have been received and shall delete only one of the two. Only Idles may be inserted for clock compensation. Signal ordered_sets are not deleted for clock compensation.

55.3.4.11 Error (/E/)

The /E/ is sent whenever an /E/ is received. It is also sent when invalid blocks are received. The /E/ allows physical sublayers such as the XGXS and PCS to propagate received errors. See R_BLOCK_TYPE and T_BLOCK_TYPE function definitions in 55.3.17.2.4 for further information.

55.3.5 Transmit process

The transmit process generates blocks based upon the TXD<31:0> and TXC<3:0> signals received from the XGMII. Two XGMII data transfers are encoded into each block. It takes 256 PMA_UNITDATA transfers to send an LDPC frame of data. Therefore, if the PCS is connected to an XGMII and PMA sublayer where the ratio of their transfer rates is exactly 25:64, then the transmit process does not need to perform rate adaptation. Where the XGMII and PMA sublayer data rates are not synchronized to that ratio, the transmit process will need to insert idles, delete idles, or delete sequence ordered sets to adapt between the rates.

The transmit process generates blocks as specified in the transmit process state machine. The contents of each block are contained in a vector tx_coded<64:0>, which is passed to the scrambler. tx_coded<0> contains the data/ctrl header and the remainder of the bits contain the block payload.

55.3.6 PCS Scrambler.

The payload of the PCS PHY frame is scrambled with a self-synchronizing scrambler. The scrambler for the MASTER shall produce the same result as the implementation shown in Figure 55–10. This implements the scrambler polynomial:[4]

$$G(x) = 1 + x^{39} + x^{58} \qquad (55–1)$$

The scrambler for the SLAVE shall produce the same result as the implementation shown in Figure 55–10. This implements the scrambler polynomial:

$$G(x) = 1 + x^{19} + x^{58} \qquad (55–2)$$

[4]The convention here, which considers the most recent bit into the scrambler to be the lowest order term, is consistent with most references and with other scramblers shown in this standard. Some references consider the most recent bit into the scrambler to be the highest order term and would therefore identify this as the inverse of the polynomial in Equation (55–1). In case of doubt, note that the conformance requirement is based on the representation of the scrambler in the figure rather than the polynomial equation.

Copyright © 2005 IEEE. All rights reserved.

The initial seed value for the Master and Slave are left to the implementor. In no case shall the scrambler state be initialized to all zeros. The scrambler is run continuously on all payload bits.

.

PCS scrambler employed by the MASTER

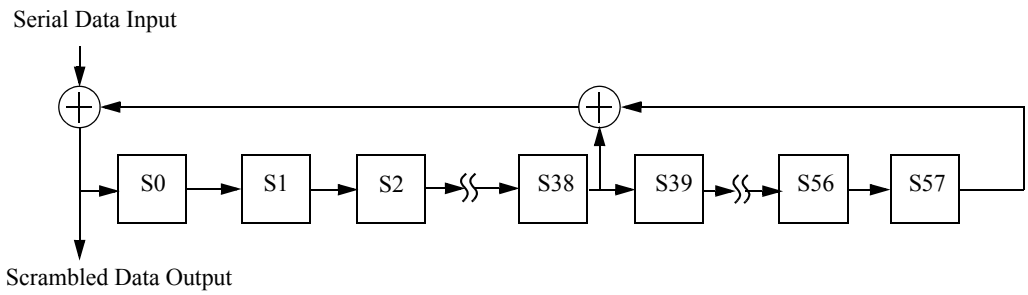

PCS scrambler employed by the SLAVE

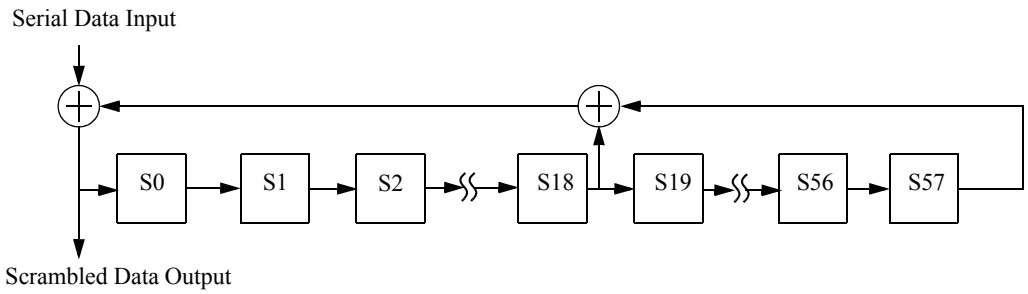

Figure 55–10—Master and Slave PCS Scramblers

55.3.7 CRC8

The aggregated 50 65B blocks shall be used to calculate the Cyclic Redundancy Check parity bits for each PHY frame. The parity bits are generated by the following CRC8 cyclic generator polynomial:

$$C(x) = 1 + x + x^5 + x^6 + x^8$$

The CRC8 shall produce the same result as the implementation shown in Figure 55–11

55.3.8 LDPC Encoder

The resulting payload of scrambled 50 65B blocks, followed by the corresponding 8 bits from the CRC8 and preceded by 1 Aux bit results in a total payload of 50*65+8+1 = 3259 bits of which 1536 (3 bits for each of the 512 DSQ128 symbols) are uncoded bits and the remaining 1723 shall be encoded by the LDPC(1723,2048) generator matrix G. The generator matrix is of the form G = [I P], where I is the 1723 by

 Copyright © 2005 IEEE. All rights reserved.

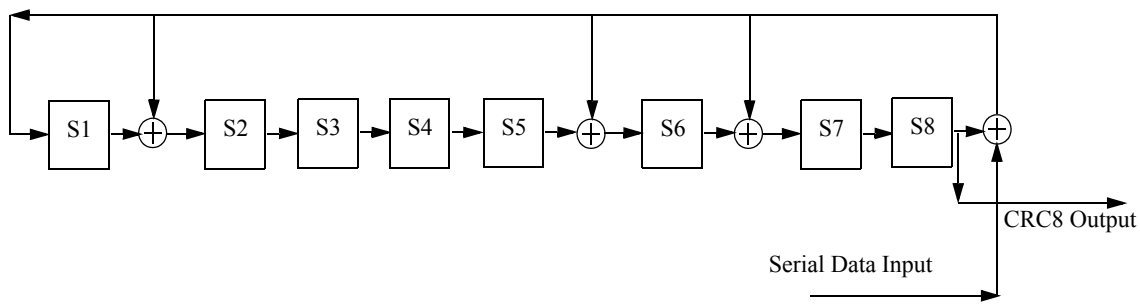

Figure 55–11—CRC8

1723 identity matrix and P is a the parity matrix with 1723 rows and 325 columns. The file gen_802.3an.txt contains a representation of G. gen_802.3an.txt contains 1723 rows, one for each row of G. Each row has numbers ranging from 0 to 2047 separated by spaces. Each number represents the column index of the "1" entries in the specific row. All other entries of G are "0". G can also be constructed from P, which is included in Annex 55A.

The LPDC encoding takes the 1723 bit input code vector $x = [x_0\ x_1\ x_2\ ...\ x_{1722}]$, and shall generate the 2048 bit codeword c represented by the matrix multiplication c = x*G. For both x and c the encoder shall follow the notation described in 55.3.4.1 where the lsb (leftmost element of the vectors x and c) is the first bit into the LDPC encoder and the first transmitted bit.

55.3.9 DSQ128 bit mapping

Double Square 128 (DSQ128) refers to a two dimensional constellation with 128 possible 2D values, such that the combined 2D symbol carries log2(128) or 7 bits. The PHY frame of 1536 uncoded bits and 2048 (LDPC output) coded bits described in Figure 55–6 shall be partitioned into 7 bit groups of (3 uncoded, 4 coded) as described in Figure 55–8. The bit partition is as follows, the first 1290 (3*430) uncoded bits are paired with the first 1720 (4*430) LDPC input bits. The following 3 uncoded bits are paired with the last 3 LDPC input bits and the first LDPC parity bit. Finally the remaining 243 (3*81) uncoded bits are paired with the remaining 324 (4*81) LDPC parity bits.

Each DSQ128 2D value has two components denoted $DSQ128_1$ and $DSQ128_2$ respectively. When referring to either component of the 2D DSQ128 we will use the notation 1DSQ128. The DSQ128 can be constructed by pruning the 256 values of a 2D-PAM16 where every other point in 2D is discarded (like the black or white squares in a checkerboard). The 1DSQ128 components $DSQ128_1$ and $DSQ128_2$ can each take any of the values from the set {-15, -13, -11, -9, -7, -5, -3, -1, 1, 3, 5, 7, 9, 11, 13, 15}. The mapping from 7 bits where $u_0\ u_1\ u_2$ denote the 3 uncoded bits and $c_0\ c_1\ c_2\ c_3$ denote the 4 coded bits to the DSQ128 is described by the following 3 steps (the bits from the scrambler output shall be read lsb first):

Step 1:

$x_{13} = (!u_0)\ \&\ u_2$

$x_{12} = u_0 \text{ XOR } u_2$

$x_{11} = c_0$

$x_{10} = c_0 \text{ XOR } c_1$

Copyright © 2005 IEEE. All rights reserved.

$x_{23} = (u_1 \& u_2) \text{ OR } (u_0 \& !u_1)$

$x_{22} = u_1 \text{ XOR } u_2$

$x_{21} = c_2$

$x_{20} = c_2 \text{ XOR } c_3$

Then,

$x_1 = 8x_{13}+4x_{12}+2x_{11}+x_{10}$

$x_2 = 8x_{23}+4x_{22}+2x_{21}+x_{20}$

Step 2:

$y_1 = (x_1 + x_2) \text{ intmod16}$

$y_2 = (-x_1 + x_2) \text{ intmod16}$

Step 3:

$DSQ128_1 = 2y_1 - 15$

$DSQ128_2 = 2y_2 - 15$

where ‘n intmod16’ for an integer n, is defined as the integer value p in the interval [0, 16) such that ‘p = n + 16m’, for some integer m.

55.3.10 DSQ128 to 4D-1DSQ128

The DSQ mapper generates 512 DSQ128 2D symbols per LDPC frame that must be mapped onto 256 4D symbols prior to sending to the PMA via PMA_UNITDATA.request. The mapping of DSQ128 to 4D-1DSQ128 is illustrated in Figure 55–6. As shown in Figure 55–6, the two 1DSQ128 components of each DSQ128 symbol are mapped onto two consecutive time periods on the same wire pair.

55.3.11 65B-LDPC Framer

The 65B-LDPC adapts between the 65-bit width of the 65B blocks and the 4D-1DSQ128 width of the PMA. When the transmit channel is operating in normal mode, the 65B-LDPC sends four 1DSQ128 of transmit data at a time via PMA_UNITDATA.request primitives. The PMA_UNITDATA.request primitives are fully packed with bits.

55.3.12 Test-pattern generators

The test-pattern generator mode is provided for enabling joint testing of the local transmitter, the channel and remote receiver. When the transmit PCS is operating in test-pattern mode it shall transmit continuously as illustrated in Figure 55–6, with the input to the scrambler set to zero and the initial condition of the scrambler set to any non-zero value. When the receiver PCS is operating in test-pattern mode it shall receive continuously as illustrated in Figure 55–7. After acquiring the self synchronizing scrambler state, the output of the received scrambled values should ideally be zero. Any nonzero values correspond to receiver bit errors.

 Copyright © 2005 IEEE. All rights reserved.

55.3.13 Frame and Block synchronization

When the receive channel is operating in normal mode, the frame and block synchronization function receives data via 4D-1DSQ128 PMA_UNITDATA.request primitives. It shall form a 4D 1DSQ128 stream from the primitives by concatenating requests with the 1DSQ128s of each primitive in order from rx_data-group<0> to rx_data-group<255> (see Figure 55–7). It obtains block_lock to the LDPC frames during the PAM2 training pattern using synchronization bits provided on pair A. The 65-bit blocks are extracted based on their location in the LDPC frame.

55.3.14 PCS Descrambler

The descrambler processes the payload to reverse the effect of the scrambler using the same polynomial. It shall produce the same result as the implementations shown in Figure 55–12 for the MASTER and the SLAVE

PCS descrambler employed by the MASTER

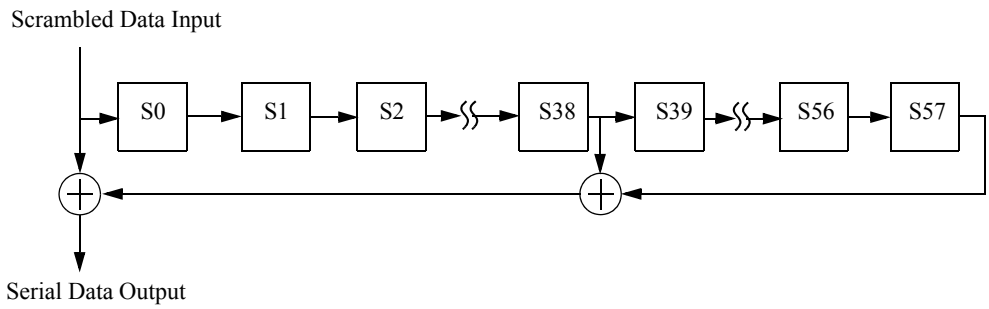

PCS descrambler employed by the SLAVE

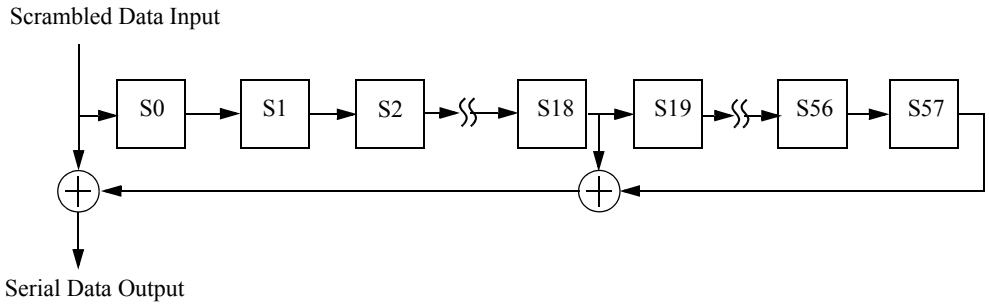

Figure 55–12—Master and Slave PCS Descramblers

55.3.15 PCS Receive function

The PCS Receive function accepts received code-groups provided by the PMA Receive function via the parameter rx_symb_vector. To achieve correct operation, PCS Receive uses the knowledge of the encoding rules that are employed. During training mode, PCS Receive checks the received framing and signals the reliable acquisition of the descrambler state by setting the parameter scr_status to OK. The received 65B-

Copyright © 2005 IEEE. All rights reserved.

LDPC frames are decoded into blocks of 65-bits to obtain the signals RXD<31:0> and RXC<3:0> for transmission to the XGMII. Two XGMII data transfers are decoded from each block. Where the XGMII and PMA sublayer data rates are not synchronized to a 25:64 ratio, the receive process will insert idles, delete idles, or delete sequence ordered sets to adapt between rates.

The receive process decodes blocks as specified in the receive state machine shown in Figure 55–16.

55.3.16 PMA Training Side-stream scrambler polynomials

The PCS Transmit function employs side-stream scrambling for 2-level PAM PMA training. If the parameter config provided to the PCS by the PMA PHY Control function via the PMA_CONFIG.indicate message assumes the value MASTER, PCS Transmit shall employ

$$g_M(x) = 1 + x^{13} + x^{33}$$

as transmitter side-stream scrambler generator polynomial. If the PMA_CONFIG.indicate message assumes the value of SLAVE, PCS Transmit shall employ

$$g_S(x) = 1 + x^{20} + x^{33}$$

as transmitter side-stream scrambler generator polynomial. An implementation of master and slave PHY side-stream scramblers by linear-feedback shift registers is shown in Figure 55–13. The bits stored in the shift register delay line at time n are denoted by $Scr_n[32:0]$. At each symbol period, the shift register is advanced by one bit, and one new bit represented by $Scr_n[0]$ is generated. The transmitter side-stream scrambler is reset upon execution of the PCS Reset function. If PCS Reset is executed, all bits of the 33-bit vector representing the side-stream scrambler state are initialized with the values $seed_M[32:0]$ for the MASTER scrambler and $seed_S[32:0]$ for the SLAVE scrambler.

Moreover during Auto-Negotiation each transceiver may request the remote transceiver to re initialize the values of its scrambler state after every 16384 symbol periods, to generate a periodically repeating pattern with repetition period 16384. If the remote transceiver is the MASTER the scrambler shall be initialized with the value $seed_M[32:0]$ and if the remote transceiver is the SLAVE the scrambler shall be initialized with the value $seed_S[32:0]$. The initial values of the scrambler state $seed_M[32:0]$ and $seed_S[32:0]$ shall be the 33 bit hexadecimal value 33’h15979A422.

 Copyright © 2005 IEEE. All rights reserved.

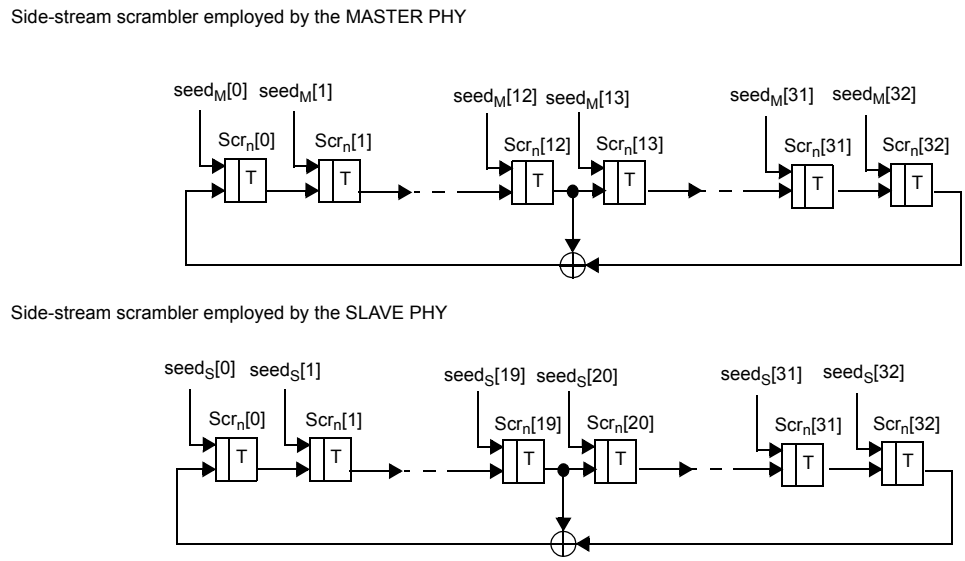

Figure 55–13—A realization of side-stream scramblers by linear feedback shift registers

55.3.16.1 Generation of bits $Sy_n[3:0]$

PMA Training signal encoding rules are based on the generation, at time n, of the four bits $Sy_n[3:0]$. These four bits are generated in a systematic fashion using the bits in $Scr_n[0:32]$, and an auxiliary generating polynomial, g(x). These four bits are mutually uncorrelated. For both master and slave PHYs, they are obtained by the same linear combinations of bits stored in the transmit scrambler shift register delay line. These four bits are derived from elements of the same maximum-length shift register sequence of length 2^{33}–1 as $Scr_n[0]$, but shifted in time. The associated delays are all large and different so that there is no short-term correlation among the bits $Sy_n[3:0]$. The auxiliary generating polynomial is

$$g(x) = x^3 \wedge x^8$$

where ^ denotes the XOR logic operator.

The four bits $Sy_n[3:0]$ are generated using the bit $Scr_n[0]$ and g(x) as in the following equations:

$$Sy_n[0] = Scr_n[0]$$

$$Sy_n[1] = g(Sy_n[0]) = Scr_n[3] \wedge Scr_n[8]$$

$$Sy_n[2] = g(Sy_n[1]) = Scr_n[6] \wedge Scr_n[16]$$

$$Sy_n[3] = g(Sy_n[2]) = Scr_n[9] \wedge Scr_n[14] \wedge Scr_n[19] \wedge Scr_n[24]$$

By construction, the four bits $Sy_n[3:0]$ are derived from elements of the same maximum-length shift register sequence of length 2^{33}–1 as $Scr_n[0]$, but shifted in time by varying delays. The associated delays are all large and different so that there is no apparent correlation among the bits.

Copyright © 2005 IEEE. All rights reserved.

55.3.16.2 Generation of 4-D symbols TA_n, TB_n, TC_n, TD_n

The four-bit word Syn[3:0] is mapped to a 4-D symbol (TA_n, TB_n, TC_n, TD_n) according to following equations:

$Sz_n[0] = !Sy_n[0]$ *for* $n=k*256$, $k=0, 1, 2, ...$

$=Sy_n[0]$ *else*

$Sw_n[0] = Sz_n[0] \wedge IF_n$, *for* $m*16384 - 128 <= n < m*16834$, $m= 1, 2, 3,...$

$=Sz_n[0]$ *else*

TA_n= 9 *if* $(Sw_n[0]=0)$

-9 *else*

TB_n= 9 *if* $(Sy_n[1]=0)$

-9 *else*

TC_n= 9 *if* $(Sy_n[2]=0)$

-9 *else*

TD_n= 9 *if* $(Sy_n[3]=0)$

-9 *else*

Notice that over the repeating time intervals of 16384 and of length *128, m*16384 - 128<= n <m*16384, m= 1, 2, 3,...,* the PMA training pattern in pair A is XOR'ed with the InfoField (IF_n). Thus pair A transmits the InfoField which communicates to the remote transceiver three transmitter settings of THP and Power Backoff and several control.

55.3.16.3 Training mode descrambler polynomials

The PHY shall acquire descrambler state synchronization to the PAM2 training sequence and report success through scr_status. For side-stream descrambling, the MASTER PHY shall employ the receiver descrambler generator polynomial $g'_M(x) = 1 + x^{20} + x^{33}$ and the SLAVE PHY shall employ the receiver descrambler generator polynomial $g'_S(x) = 1 + x^{13} + x^{33}$.

55.3.17 Detailed functions and state diagrams

55.3.17.1 State diagram conventions

The body of this subclause is comprised of state diagrams, including the associated definitions of variables, constants, and functions. Should there be a discrepancy between a state diagram and descriptive text, the state diagram prevails.

The notation used in the state diagrams follows the conventions of 21.5. State diagram timers follow the conventions of 14.2.3.2. The notation ++ after a counter or integer variable indicates that its value is to be incremented.

 Copyright © 2005 IEEE. All rights reserved.

55.3.17.2 State diagram parameters

55.3.17.2.1 Constants

EBLOCK_R<71:0>
72 bit vector to be sent to the XGMII interface containing /E/ in all the eight character locations.

EBLOCK_T<64:0>
65 bit vector to be sent to the LDPC encoder containing /E/ in all the eight character locations.

IFRAME_R<71:0>
72 bit vector to be sent to the XGMII interface containing /I/ in all the eight character locations

LBLOCK_R<71:0>
72 bit vector to be sent to the XGMII interface containing two Local Fault ordered_sets. The Local Fault ordered_set is defined in 46.3.4.

LBLOCK_T<64:0>
65 bit vector to be sent to the LDPC encoder containing two Local Fault ordered sets.

55.3.17.2.2 Variables

config
The config parameter set by PMA and passed to the PCS via the PMA_CONFIG.indicate primitive. Values: MASTER, SLAVE

link_status
The link_status parameter set by PMA Link Monitor and passed to the PCS via the PMA_LINK.indicate primitive.
Values: OK or FAIL

lfer_test_lf
Boolean variable that is set true when a new LDPC frame is available for testing and false when LFER_TEST_LF state is entered. A new LDPC frame is available for testing when the Block Sync process has accumulated enough symbols from the PMA to evaluate the next LDPC frame

block_lock
Boolean variable that is set true when receiver acquires block delineation

hi_lfer
Boolean variable which is asserted true when the lfer_cnt exceeds 16 indicating a bit error ratio > 4e-4

pcs_reset
Boolean variable that controls the resetting of the PCS. It is true whenever a reset is necessary including when reset is initiated from the MDIO, during power on, and when the MDIO has put the PCS into low-power mode.

power_on
Condition that is true until such time as the power supply for the device that contains the PCS has reached the operating region.
Values: FALSE; The device is completely powered (default).
TRUE; The device has not been completely powered.

rx_coded<64:0>
Vector containing the input to the 64B/65B decoder. The format for this vector is shown in Figure 55–9. The leftmost bit in the figure is rx_coded<0> and the rightmost bit is rx_coded<64>.

rx_raw<71:0>
Vector containing two successive XGMII transfers. RXC<0> through RXC<3> for the first transfer are placed in rx_raw<0> through rx_raw<3>, respectively. RXC<0> through RXC<3> for the second transfer are placed in rx_raw<4> through rx_raw<7>, respectively. RXD<0> through RXD<31> for the first transfer are placed in rx_raw<8> through rx_raw<39>, respectively.

Copyright © 2005 IEEE. All rights reserved.

RXD<0> through RXD<31> for the second transfer are placed in rx_raw<40> through rx_raw<71>, respectively.

lf_valid

Boolean indication that is set true if received LDPC frame is valid.

signal_ok

Boolean variable that is set based on the most recently received value of PMA_UNITDATA.indicate(SIGNAL_OK). It is true if the value was OK and false if the value was FAIL.

tx_coded<64:0>

Vector containing the output from the 64B/65B encoder. The format for this vector is shown in Figure 55–9. The leftmost bit in the figure is tx_coded<0> and the rightmost bit is tx_coded<64>.

tx_raw<71:0>

Vector containing two successive XGMII transfers. TXC<0> through TXC<3> for the first transfer are placed in tx_raw<0> through tx_raw<3>, respectively. TXC<0> through TXC<3> for the second transfer are placed in tx_raw<4> through tx_raw<7>, respectively. TXD<0> through TXD<31> for the first transfer are placed in tx_raw<8> through tx_raw<39>, respectively. TXD<0> through TXD<31> for the second transfer are placed in tx_raw<40> through tx_raw<71>, respectively.

55.3.17.2.3 Timers

State diagram timers follow the conventions described in 14.2.3.2.

125_ustimer:

Timer that is triggered every 125 µs +1%, -25%.

55.3.17.2.4 Functions

DECODE(rx_symb_vector<255:0>)

In the PCS Receive process, this function takes as its argument 256 values of rx_symb_vector<255:0> from the PMA and decodes the 65B-LDPC bit vector returning 50 vectors rx_raw<71:0> which is sent to the XGMII. The DECODE function shall decode the block as specified in 55.3.16.

ENCODE(tx_raw<71:0>)

Encodes the 72-bit vector received from the XGMII, returning 256 values of tx_symb_vector. The ENCODE function shall encode the block as specified in 55.3.4.

R_BLOCK_TYPE = {C, S, T, D, E}

This function classifies each 65-bit rx_coded vector as belonging to one of the five types depending on its contents.

Values: C; The vector contains a sync header of 1 and one of the following:

a) A block type field of 0x1e and eight valid control characters other than /E/;
b) A block type field of 0x2d or 0x4b, a valid O code, and four valid control characters;
c) A block type field of 0x55 and two valid O codes.

S; The vector contains a sync header of 1 and one of the following:

a) A block type field of 0x33 and four valid control characters;
b) A block type field of 0x66 and a valid O code;
c) A block type field of 0x78.

T; The vector contains a sync header of 1, a block type field of 0x87, 0x99, 0xaa, 0xb4, 0xcc, 0xd2, 0xe1 or 0xff and all control characters are valid.

D; The vector contains a sync header of 0.

E; The vector does not meet the criteria for any other value.

 Copyright © 2005 IEEE. All rights reserved.

A valid control character is one containing a 10GBASE-R control code specified in Table 55–1. A valid O code is one containing an O code specified in Table 55–1.

R_TYPE(rx_coded<64:0>)
Returns the R_BLOCK_TYPE of the rx_coded<64:0> bit vector.

R_TYPE_NEXT
Prescient end of packet check function. It returns the R_BLOCK_TYPE of the rx_coded vector immediately following the current rx_coded vector.

T_BLOCK_TYPE = {C, S, T, D, E}
This function classifies each 72-bit tx_raw vector as belonging to one of the five types depending on its contents.

Values: C; The vector contains one of the following:
a) eight valid control characters other than /O/, /S/, /T/ and /E/;
b) one valid ordered_set and four valid control characters other than /O/, /S/ and /T/;
c) two valid ordered sets.

S; The vector contains an /S/ in its first or fifth character, any characters before the S character are valid control characters other than /O/, /S/ and /T/ or form a valid ordered_set, and all characters following the /S/ are data characters.

T; The vector contains a /T/ in one of its characters, all characters before the /T/ are data characters, and all characters following the /T/ are valid control characters other than /O/, /S/ and /T/.

D; The vector contains eight data characters.

E; The vector does not meet the criteria for any other value.

A tx_raw character is a control character if its associated TXC bit is asserted. A valid control character is one containing an XGMII control code specified in Table 55–1. A valid ordered_set consists of a valid /O/ character in the first or fifth characters and data characters in the three characters following the /O/. A valid /O/ is any character with a value for O code in Table 55–1.

T_TYPE(tx_raw<71:0>)
Returns the T_BLOCK_TYPE of the tx_raw<71:0> bit vector.

T_TYPE_NEXT
Prescient end of packet check function. It returns the FRAME_TYPE of the tx_raw vector immediately following the current tx_raw vector.

55.3.17.2.5 Counters

lfer_cnt
Count up to a maximum of 16 of the number of invalid LDPC frames within the current 125 µs period.

lf_cnt
Count of the number of LDPC frames checked within the current 64 LDPC frame window.

lf_invalid_cnt
Count of the number of invalid LDPC frames within the current 64 LDPC frame window.

55.3.17.3 Messages

PMA_UNITDATA.indicate (rx_symb_vector)
A signal sent by PMA Receive indicating that a vector of four symbols is available in rx_symb_vector. (See 55.2.6.)

Copyright © 2005 IEEE. All rights reserved.

PMA_UNITDATA.request (tx_symb_vector)

A signal sent to PMA Transmit indicating that a vector of four 1DSQ128 symbols is available in tx_symb_vector. (See 55.2.5.)

PUDI

Alias for PMA_UNITDATA.indicate (rx_symb_vector).

PUDR

Alias for PMA_UNITDATA.request (tx_symb_vector).

55.3.17.4 State diagrams

The LFER Monitor state machine shown in Figure 55–14 monitors the received signal for high LDPC frame error ratio.

The Transmit state machine shown in Figure 55–15 controls the encoding of 65B transmitted blocks. It makes exactly one transition for each 65B transmit block processed. Though the Transmit state machine sends Local Fault ordered sets when reset is asserted, the scrambler and 65B-LDPC may not be operational during reset. Thus, the Local Fault ordered sets may not appear on the PMA service interface.

The Receive state machine shown in Figure 55–16 controls the decoding of received blocks. It makes exactly one transition for each receive block processed.

The PCS shall perform the functions of LFER Monitor, Transmit and Receive as specified in these state machines.

55.3.18 PCS Management

The following objects apply to PCS management. If an MDIO Interface is provided (see Clause 45), they are accessed via that interface. If not, it is recommended that an equivalent access be provided.

55.3.18.1 Status

PCS_status:

Indicates whether the PCS is in a fully operational state. It is only true if block_lock is true and hi_lfer is false. This status is reflected in MDIO register 3.32.12. A latch low view of this status is reflected in MDIO register 3.1.2 and a latch high of the inverse of this status, Receive fault, is reflected in MDIO register 3.8.10.

block_lock:

Indicates the state of the block_lock variable. This status is reflected in MDIO register 3.32.0. A latch low view of this status is reflected in MDIO register 3.33.15.

hi_lfer:

Indicates the state of the hi_lfer variable. This status is reflected in MDIO register 3.32.1. A latch high view of this status is reflected in MDIO register 3.33.14.

55.3.18.2 Counters

The following counters are reset to zero upon read and upon reset of the PCS. When they reach all ones, they stop counting. Their purpose is to help monitor the quality of the link.

lfer_count:

6-bit counter that counts each time LFER_BAD_LF state is entered. This counter is reflected in

 Copyright © 2005 IEEE. All rights reserved.

MDIO register bits 3.33.13:8. Note that this counter counts a maximum of 16 counts per 125 µs since the LFER_BAD_LF can be entered a maximum of 16 times per 125 µs window.

errored_block_count:

8-bit counter. When the receiver is in normal mode, errored_block_count counts once for each time RX_E state is entered. This counter is reflected in MDIO register bits 3.33.7:0.

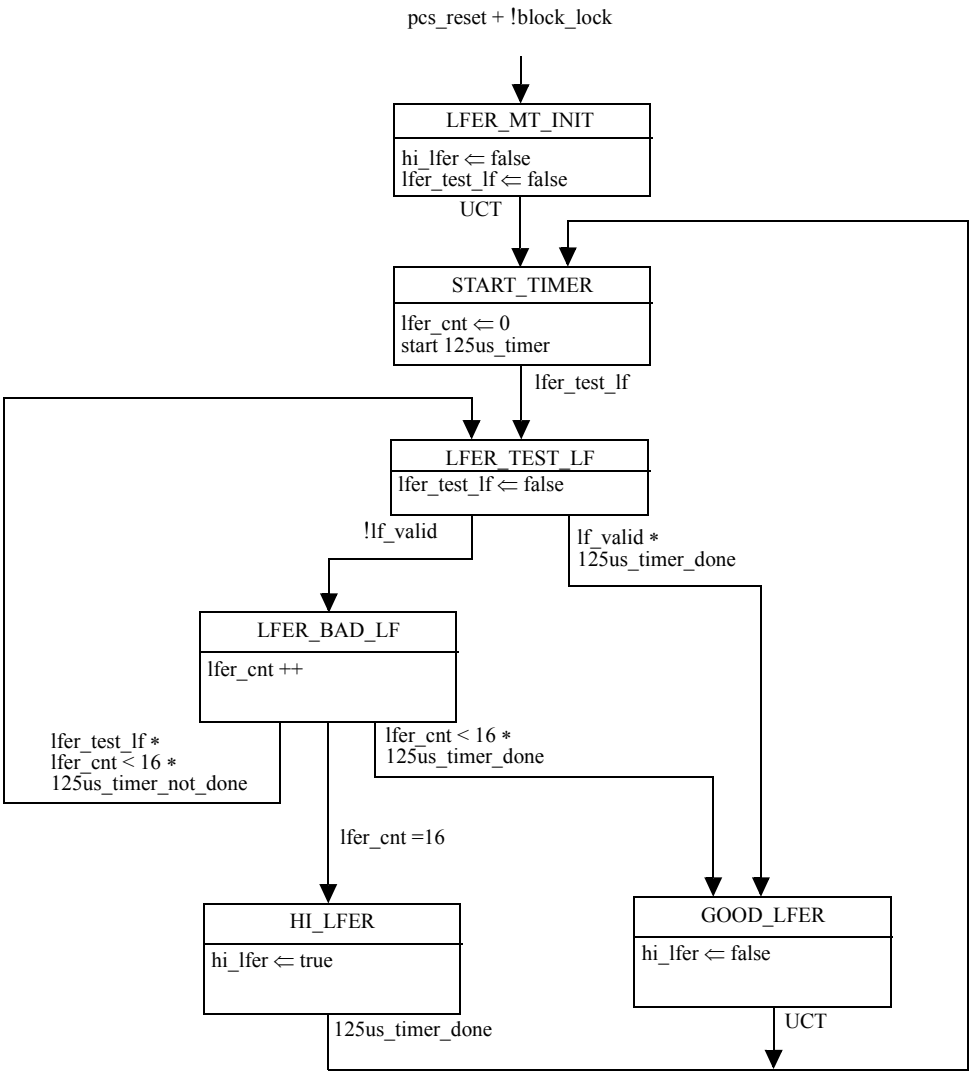

Figure 55–14—LFER monitor state machine

55.3.18.3 Loopback

The PCS shall be placed in Loopback mode when the Loopback bit in MDIO register 3.0.14 is set to a logic one. In this mode, the PCS shall accept data on the transmit path from the XGMII and return it on the receive path to the XGMII. In addition, the PCS shall transmit a continuous stream of 65B-LDPC encoded 1DSQ128 symbols to the PMA sublayer, and shall ignore all data presented to it by the PMA sublayer.

Copyright © 2005 IEEE. All rights reserved.

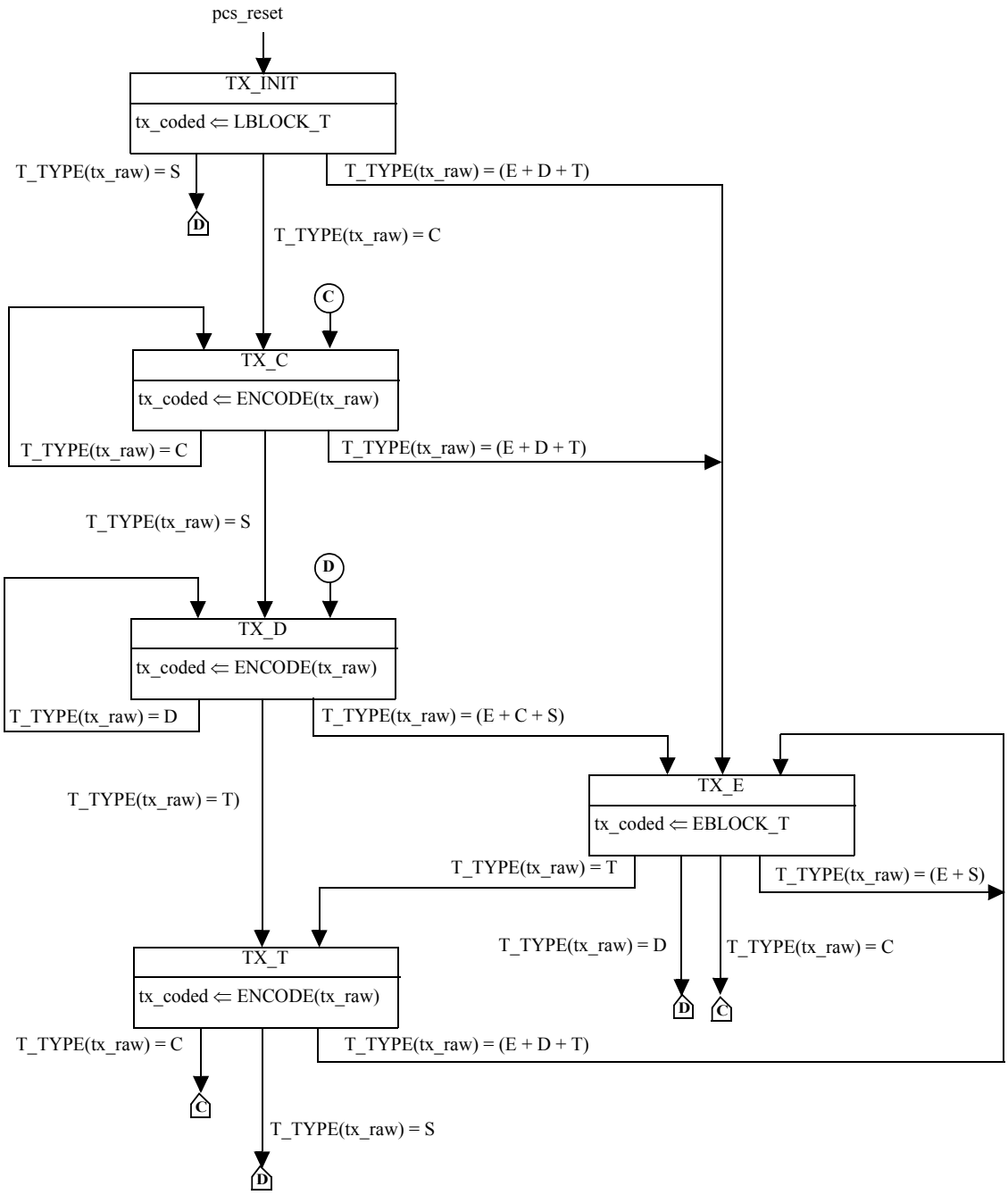

Figure 55–15—PCS Transmit state machine

Copyright © 2005 IEEE. All rights reserved.

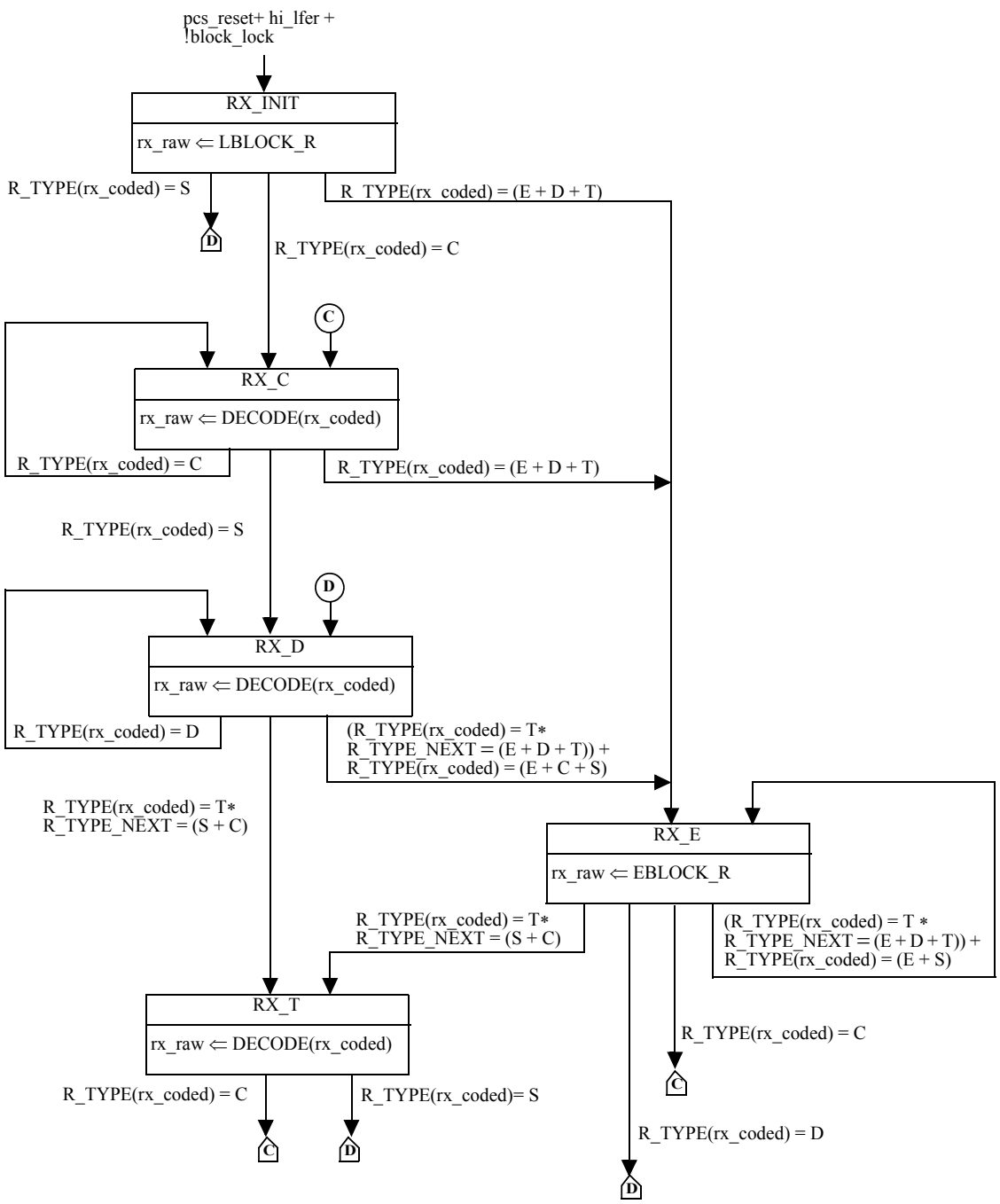

Figure 55–16—PCS Receive state machine

Copyright © 2005 IEEE. All rights reserved.

55.4 Physical Medium Attachment (PMA) sublayer

55.4.1 PMA functional specifications

The PMA couples messages from a PMA service interface specified in 55.2.2 to the 10GBASE-T baseband medium, specified in 55.7.

The interface between PMA and the baseband medium is the Medium Dependent Interface (MDI), which is specified in 55.8.

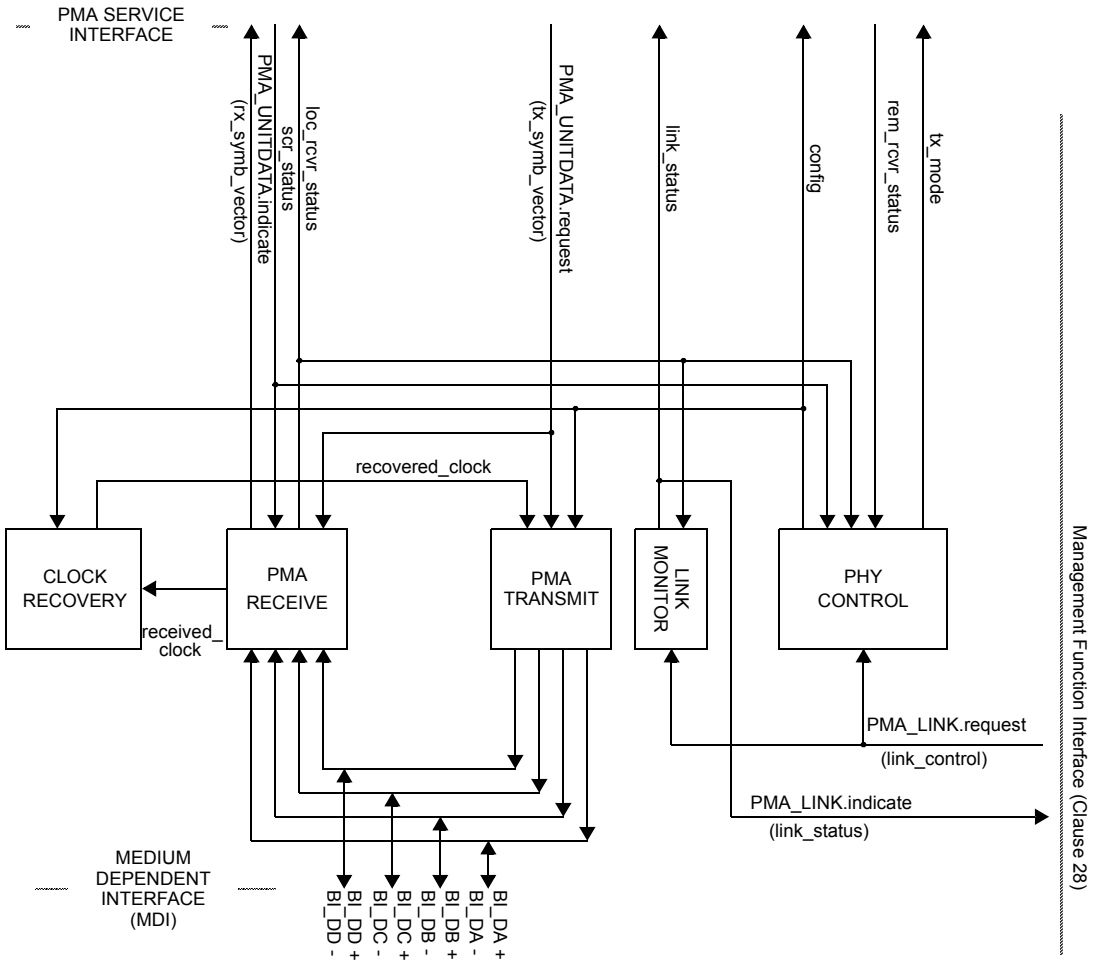

Figure 55–17—PMA reference diagram

NOTE—The recovered_clock arc is shown to indicate delivery of the recovered clock signal back to PMA TRANSMIT for loop timing.

55.4.2 PMA functions

The PMA sublayer comprises one PMA Reset function and five simultaneous and asynchronous operating functions. The PMA operating functions are PHY Control, PMA Transmit, PMA Receive, Link Monitor, and Clock Recovery. All operating functions are started immediately after the successful completion of the PMA Reset function.

Copyright © 2005 IEEE. All rights reserved.

The PMA reference diagram, Figure 55–17, shows how the operating functions relate to the messages of the PMA Service interface and the signals of the MDI. Connections from the management interface, comprising the signals MDC and MDIO, to other layers are pervasive and are not shown in Figure 55–17. The management interface and its functions are specified in Clause 45.

55.4.2.1 PMA Reset function

The PMA Reset function shall be executed whenever one of the two following conditions occur:

a) Power on (see 55.3.17.2.2)
b) The receipt of a request for reset from the management entity

PMA Reset sets pcs_reset=ON while any of the above reset conditions hold true. All state diagrams take the open-ended pma_reset branch upon execution of PMA Reset. The reference diagrams do not explicitly show the PMA Reset function.

55.4.2.2 PMA Transmit function

The PMA Transmit function comprises four synchronous transmitters to generate four pulse-amplitude modulated signals on each of the four pairs BI_DA, BI_DB, BI_DC, and BI_DD. PMA Transmit shall continuously transmit onto the MDI pulses modulated by the symbols given by tx_symb_vector[BI_DA], tx_symb_vector[BI_DB], tx_symb_vector[BI_DC] and tx_symb_vector[BI_DD], respectively after processing with the THP, optional transmit filtering, digital to analog conversion (DAC) and subsequent analog filtering. The four transmitters shall be driven by the same transmit clock, TX_TCLK. The signals generated by PMA Transmit shall follow the mathematical description given in 55.4.3.1, and shall comply with the electrical specifications given in 55.5.

When the PMA_CONFIG.indicate parameter config is MASTER, the PMA Transmit function shall source TX_TCLK from a local clock source while meeting the transmit jitter requirements of 55.5.5. The MASTER/SLAVE relationship may include loop timing. If loop timing is implemented and the PMA_CONFIG.indicate parameter config is SLAVE, the PMA Transmit function shall source TX_TCLK from the recovered clock of 55.4.2.6 while meeting the jitter requirements of 55.5.5. If loop timing is not implemented, the SLAVE PHY clocking is identical to the MASTER PHY clocking.

The PMA transmit fault function is optional. The faults detected by this function are implementation specific. If the MDIO interface is implemented, then this function shall be mapped to the transmit fault bit as specified in 45.2.1.7.4 #CrossRef#

55.4.2.3 PMA Receive function

The PMA Receive function comprises four independent receivers for pulse-amplitude modulated signals on each of the four pairs BI_DA, BI_DB, BI_DC, and BI_DD. PMA Receive contains the circuits necessary to both detect symbol sequences from the signals received at the MDI over receive pairs BI_DA, BI_DB, BI_DC, and BI_DD and to present these sequences to the PCS Receive function. The signals received at the MDI are described mathematically in 55.4.3.2. The PMA shall translate the signals received on pairs BI_DA, BI_DB, BI_DC, and BI_DB into the PMA_UNITDATA.indicate parameter rx_symb_vector with equivalent LFER of less than $3.2*10^{-9}$ over a channel meeting the requirements of 55.7.

To achieve the indicated performance, it is highly recommended that PMA Receive include the functions of signal equalization, echo and crosstalk cancellation. The sequence of code-groups assigned to tx_symb_vector is needed to perform echo and self near-end crosstalk cancellation.

Copyright © 2005 IEEE. All rights reserved.

The PMA Receive function uses the scr_status parameter and the state of the equalization, cancellation, and estimation functions to determine the quality of the receiver performance, and generates the loc_rcvr_status variable accordingly. The precise algorithm for generation of loc_rcvr_status is implementation dependent.

The PMA receive fault function is optional. The PMA receive fault function is the logical OR of the link_status = FAIL and any implementation specific fault. If the MDIO interface is implemented, then this function shall contribute to the receive fault bit specified in 45.2.1.7.5 #CrossRef#

55.4.2.4 PHY Control function

PHY Control generates the control actions that are needed to bring the PHY into a mode of operation during which frames can be exchanged with the link partner. PHY Control shall comply with the state diagram description given in Figure 55–18.

During PMA Training, PHY Control information is exchanged between link partners with a 16 byte InfoField which is XOR'ed the last 128 bits of the PMA 16384 PAM2 frame on pair A. The InfoField sent by the Master to the Slave is denoted by IF_M and the InfoField sent by the Slave to the Master is denoted IF_S. The 16 bytes the InfoField shall include the following list of fields:

a) Start of Frame Delimiter (4 bytes). [Oct1<7:0>, Oct2<7:0>, Oct3<7:0>, Oct4<7:0>]. Shall use the Hexadecimal value BBA70000
b) Current transmitter setting (1 byte). Represented by the octet Oct5{X<7>, PBO<6:4>, X<3:2>, THP<1:0>}
c) Next transmitter setting (1 byte). Represented by the octet Oct6{X<7>, PBO<6:4>, X<3:2>, THP<1:0>}
d) Requested remote transmitter setting (1 byte). Represented by the octet Oct7{X<7>, PBO<6:4>, X<3:2>, THP<1:0>}
e) Message Field (1 byte). Represented by the octet Oct8{X<7:5>, PBO_increase<4>, loc_rcvr_status<3>, trans_to_Training_Update<2>, trans_to_PCS_training<1>, trans_to_slave_silent<0>}
f) SNR Margin (0.5 byte). Represented by the half octet Oct9<7:4>, which reports received SNR Margin in 1/2dB steps.
g) Transition Counter (1.5 bytes). Counts the number of remaining frames until the next transition. Represented by the 1.5 octets [Oct9<3:0>, Oct10<7:0>]
h) Reserved Field (4 bytes). For future use or vendor specific field. Represented by the 4 octets [Oct11<7:0>, Oct12<7:0>, Oct13<7:0>, Oct14<7:0>]
i) CRC16 (2 bytes). Shall implement the CRC16 polynomial (x+1)(x^15+x+1) of the previous 10 octets, Oct5<7:0>, Oct6<7:0>, Oct7<7:0>, Oct8<7:0>, Oct9<7:0>, Oct10<7:0>, Oct11<7:0> and Oct12<7:0>.

where X represents any unused values and shall be set to 0. For all PBO InfoField values above, the PBO<6:4> 3 bit values, 000, 001, 010, 011, 100, 101, 110, 111, shall indicate power backoffs of -14dB, -12dB, -10dB, -8dB, -6dB, -4dB, -2dB, 0dB respectively. For all InfoField values above, the THP<1:0> 2 bit values, 00, 01, 10, 11, shall indicate THP settings bypass, Short, Medium and Long respectively. The SNR-margin<7:4> 4 bit values, 0000, 0001, 0010, 0011, 0100, 0101, 0110, 0111, 1000, 1001, 1010, 1011, 1100, 1101, 1111, shall indicate the SNR margin values of -2.5, -2, -1.5, -1, -0.5, 0, 0.5, 1, 1.5, 2, 2.5, 3, 3.5, 4, 4.5, 5dB respectively.

During Auto-Negotiation PHY Control is in the DISABLE 10GBASE-T TRANSMITTER state and the transmitters are disabled. When the Auto-Negotiation process asserts link_control=ENABLE, PHY Control enters the SLAVE SILENT state. Upon entering this state, the maxwait timer is started and PHY Control forces transmission of zeros by setting tx_mode=SEND_Z. In MASTER mode, PHY Control transitions immediately to the PMA TRAINING Init M state. In SLAVE mode, PHY Control transitions to the TRAINING Init S state only after the SLAVE PHY acquires timing, converges its equalizers, and acquires its

Copyright © 2005 IEEE. All rights reserved.

descrambler state, and sets scr_status=OK**.** Upon entering the PMA TRAINING Init state, the PHY Control forces transmission into the training mode by asserting tx_mode=SEND_T.

The final choice of THP and Power Backoff settings and convergence of the adaptive filter parameters is completed in the PMA TRAINING Update state. After the PHY completes successful training and establishes proper receiver operations, PCS Transmit conveys this information to the link partner via transmission of the parameter IF value loc_rcvr_status. The link partner's value for loc_rcvr_status is stored in the local device parameter rem_rcvr status and remoteIF. When the condition loc_rcvr_status=OK and rem_rcvr_status is satisfied, PHY Control transitions into PCS training.

The normal mode of operation corresponds to the SEND PCS DATA state, where PHY Control asserts tx_mode=SEND_N and transmission of data over the link can take place.

PHY Control may force the transmit scrambler state to be initialized to an arbitrary value by requesting the execution of the PCS Reset function defined in 55.3.2.1.

55.4.2.5 Link Monitor function

Link Monitor determines the status of the underlying receive channel and communicates it via the variable link_status. Failure of the underlying receive channel typically causes the PMA's clients to suspend normal operation.

The Link Monitor function shall comply with the state diagram of Figure 55–19.

Upon power on, reset, or release from power down, the Auto-Negotiation algorithm sets link_control=SCAN_FOR_CARRIER and, during this period, sends fast link pulses to signal its presence to a remote station. If the presence of a remote station is sensed through reception of fast link pulses, the Auto-Negotiation algorithm sets link_control=DISABLE and exchanges Auto-Negotiation information with the remote station. During this period, link_status=FAIL is asserted. If the presence of a remote 10GBASE-T station is established, the Auto-Negotiation algorithm permits full operation by setting link_control=ENABLE. As soon as reliable transmission is achieved, the variable link_status=OK is asserted, upon which further PHY operations can take place.

55.4.2.6 Clock Recovery function

The Clock Recovery function couples to all four receive pairs. It may provide independent clock phases for sampling the signals on each of the four pairs.

The Clock Recovery function shall provide clocks suitable for signal sampling on each line so that the LDPC FER indicated in 55.4.2.3 is achieved. The received clock signal must be stable and ready for use when training has been completed (loc_rcvr_status=OK). The received clock signal is supplied to the PMA Transmit function by received_clock.

55.4.3 MDI

Communication through the MDI is summarized in 55.4.3.1 and 55.4.3.2.

55.4.3.1 MDI signals transmitted by the PHY

The symbols to be transmitted by the PMA on the four pairs BI_DA, BI_DB, BI_DC, and BI_DD are denoted by tx_symb_vector[BI_DA], tx_symb_vector[BI_DB], tx_symb_vector[BI_DC], and tx_symb_vector[BI_DD], respectively. The modulation scheme used over each pair is 1DSQ128. PMA Transmit generates a pulse-amplitude modulated signal on each pair in the following form:

Copyright © 2005 IEEE. All rights reserved.

$$b_i = (a_i + \sum_{k=1}^{\infty} b_{i-k}\alpha_k) mod 16 \quad (55\text{–}3)$$

$$s(t) = \sum_{k=0}^{\infty} b_k h_1(t - kT) \quad (55\text{–}4)$$

where 'x mod16' of a real number x, is defined as a value between the interval (-16, 16] such that 'x mod16 = x + 32m', for some integer m. In the above equation, a_i represents the 1DSQ128 symbol from the set {-15, -13, -11, -9, -7, -5, -3, -1, 1, 3, 5, 7, 9, 11, 13, 15} to be transmitted at time iT, α_k denotes the THP coefficients, and $h_1(t)$ denotes the system symbol response at the MDI.

There shall be 16 THP settings designated by a 4 bit number ranging in value from 0 to15.

a) Setting 0 is mandatory and means no precoding.
b) Settings 1 through 9 form Set A and will be identified as A(n) where n is between 1 and 9. Each element of set A is specified in FIR form with 16 taps with 8 bits per tap. There will be 3 subsets of FIR threesomes. The first subset is {A(1), A(2), A(3)}, the second subset is {A(4), A(5), A(6)}, and the third subset is {A(7), A(8), A(9)}.
c) Settings 10 through 15 form Set B and will be identified as B(n) where n is between 1 and 6. B(n) is n+9. Each setting in set B is specified in IIR form by providing the coefficients of the polynomial: (1-D)(1+alpha*D)(1+beta*D) / (1+a1*D^1+a2*D^2+a3*D^3+a4*D^4). There will be two subsets of IIR threesomes, {B(1), B(2), B(3)} and {B(4), B(5), B(6)}. For the first set alpha has the value 1, and for the second set alpha has the value 0. The denominator coefficients are specified by 9 bit values and beta shall not be equal to unity.
d) A compliant transmitter shall implement setting 0 and either all elements of Set A or all elements of Set B. The details of the implementation technique are not specified.
e) Each set has a threesome which holds 3 settings that are intended for SHORT, MEDIUM, and LONG cables, respectively. A(1,4,7) and B(1,4) are for LONG, A(2,5,8) and B(2,5) are for MEDIUM and A(3,6,9) and B(3,6) are for SHORT. Meanings: SHORT: < 45m Cat6e (approx. <40m Class E), MEDIUM: 45-80m Cat6e (including 55m Class E), LONG: 80-100m Cat6e (including 100m Class F).
f) During Auto-Negotiation, each receiver will send information to the remote transmitter to down select to 1+3 THPs (1st is setting 0, i.e. no precoding)
g) During start-up, receiving entities request from transmitting entities a precoder setting among the 1+3 identified in previous step.
h) The FIR precoding responses for settings A(1), A(2) and A(3) shall be A(1)=[1.78125 1.375 0.53125 -0.21875 -0.65625 -0.875 -0.90625 -0.78125 -0.59375 -0.375 -0.15625 -0.03125 0 0 0 0], A(2)=[1.25 0.375 -0.4375 -0.78125 -0.75 -0.5 -0.125 0 0 0 0 0 0 0 0 0] and A(3)=[0.59375 -0.375 -0.625 -0.53125 -0.25 0.09375 0.09375 0 0 0 0 0 0 0 0].
i) The IIR precoding responses for settings B(1), B(2) and B(3) shall be as in as in ungerboeck_1_0105, #1 (100m), #2 (70m), #3 (40m) (PROVISIONALLY AGREED).

Each of the sets of THP filters (plus bypass) shall be optimized to a decreasing length of cable (from max length to 0m length). The THP filter coefficients shall be fixed after startup. This symbol response shall comply with the electrical specifications given in 55.5.

The nominal power of the PMA Transmit signal $s(t)$, denoted Ptx, shall comply with the electrical specifications given in 55.5. When the link segment does not experience the maximum IL, the PMA Transmit signal shall be reduced in increments of 2dB, as described in the Power Backoff schedule as shown in Table 55–2. The estimation of the received signal power (dBm) at the MDI, must be computed assuming the remote TX is at nominal power.

Copyright © 2005 IEEE. All rights reserved.

Editor's Note: The length and IL columns have not been voted into the draft and are only for informational purposes to help understand the table, and will be deleted when the column for the received signal power is filled in

Table 55–2—Power Backoff schedule

Received signal power (dBm) at MDI on worst pair	Length(m) (Reference)	IL 250MHz (dB) (Reference)	Power Backoff (dB)
TBD	0-25	<9.0	-14
TBD	25-45	9.0-16.2	-12
TBD	45-55	16.2-19.8	-10
TBD	55-65	19.8-23.4	-8
TBD	65-75	23.4-26.9	-6
TBD	75-85	26.9-30.5	-4
TBD	85-95	30.5-34.1	-2
TBD	>95	>34.1	0

55.4.3.2 Signals received at the MDI

Signals received at the MDI can be expressed for each pair as pulse-amplitude modulated signals that are corrupted by noise as follows:

$$r(t) = \sum_{k=0}^{\infty} a_{k,\,agmt} h_2(t - kT) + w(t) \qquad (55\text{–}5)$$

In this equation $a_{k,agmt}$ represents the augmented DSQ128 constellation elements by the transmit mod16 function, $h_2(t)$ denotes the impulse response of the overall channel between the transmit symbol source and the receive MDI and $w(t)$ is a term that represents the contribution of various noise sources. The four signals received on pairs BI_DA, BI_DB, BI_DC, and BI_DD shall be processed within the PMA Receive function to yield the received symbols rx_symb_vector.

55.4.4 Automatic MDI/MDI-X Configuration

Automatic MDI/MDI-X Configuration is intended to eliminate the need for crossover cables between similar devices. Implementation of an automatic MDI/MDI-X configuration is required for 10GBASE-T devices. The automatic configuration method used shall comply with 40.4.4. #CrossRef#

55.4.5 State variables

55.4.5.1 State diagram variables

config

The PMA shall generate this variable continuously and pass it to the PCS via the PMA_CONFIG.indicate primitive.

Values: MASTER or SLAVE

Copyright © 2005 IEEE. All rights reserved.

link_control

This variable is defined in 28.2.6.2.

PBO

PBO is a variable that can take any value from 1 to 8 and indicates the power backoff level. Denoting Ptx as the maximum nominal power, the PBO levels are:

Values: Ptx, Ptx-2dB, Ptx-4dB, Ptx-6dB, Ptx-8dB, Ptx-10dB, Ptx-12dB or Ptx-14dB respectively

55.4.5.2 Timers

All timers operate in the manner described in 14.2.3.2.

maxwait_timer

A timer used to limit the amount of time during which a receiver dwells in the SLAVE SILENT and TRAINING states. The timer shall expire 950 ± 10 (TBD) ms if config = MASTER or 750 ± 10 (TBD) ms if config = SLAVE. This timer is used jointly in the PHY Control and Link Monitor stage diagrams. The maxwait_timer is tested by the Link Monitor to force link_status to be set to FAIL if the timer expires and loc_rcvr_status is NOT_OK. See Figure 55–18.

maxincr_timer

A timer used to limit the amount of time during which a Master dwells in the PMA Training Init M state. The timer shall expire 100 ± 5 ms if PBO = -10, or 50 ± 5 ms if PBO > -10.

minwait_timer

A timer used to determine the minimum amount of time the PHY Control stays in the PMA TRAINING, SEND IDLE, or DATA states. The timer shall expire 1 ± 0.1 ms after being started.

Copyright © 2005 IEEE. All rights reserved.

55.4.6 State Diagrams

55.4.6.1 PHY Control state diagram

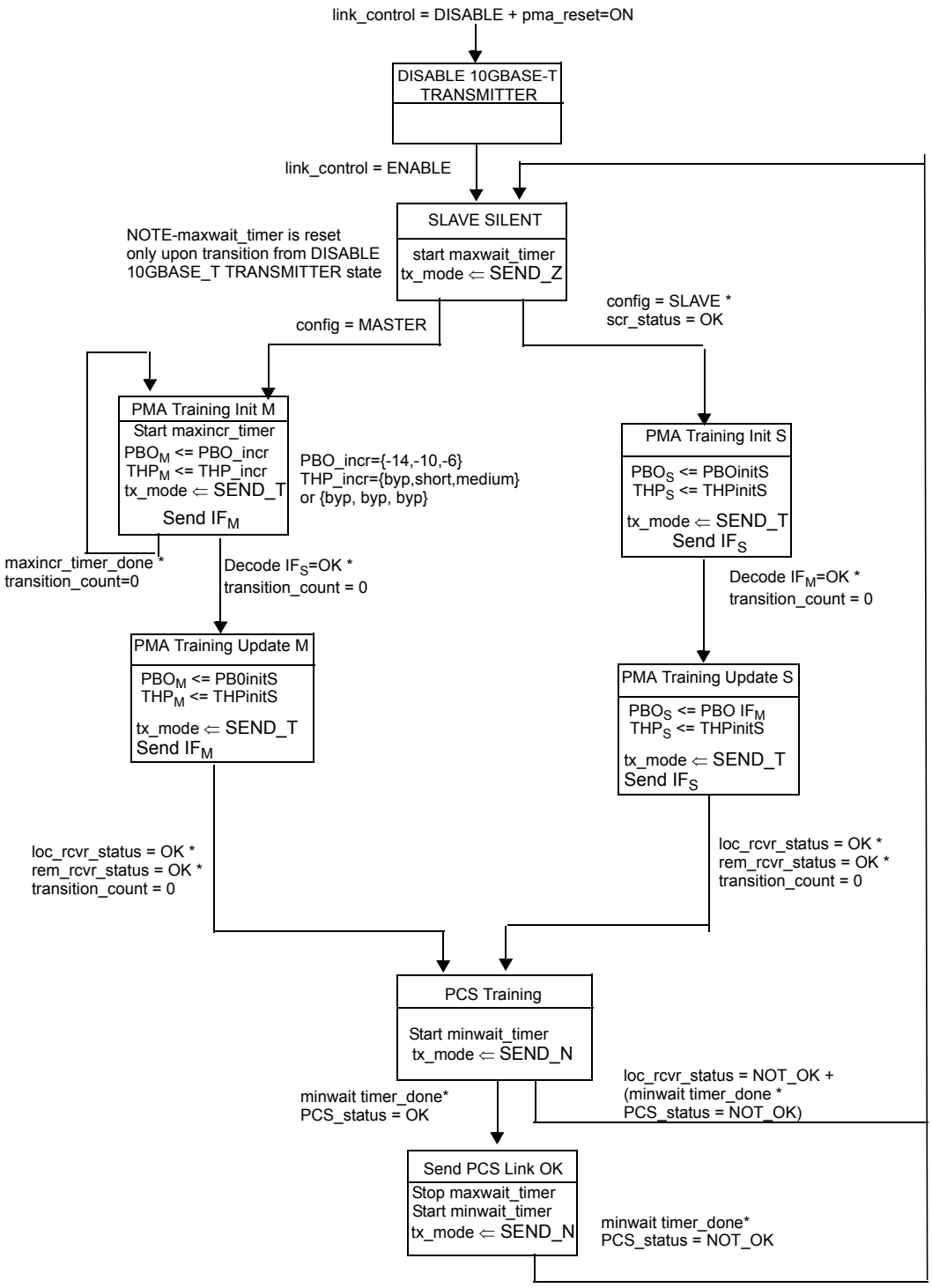

Figure 55–18—PHY Control state diagram

Copyright © 2005 IEEE. All rights reserved.

55.4.6.2 Link Monitor state diagram

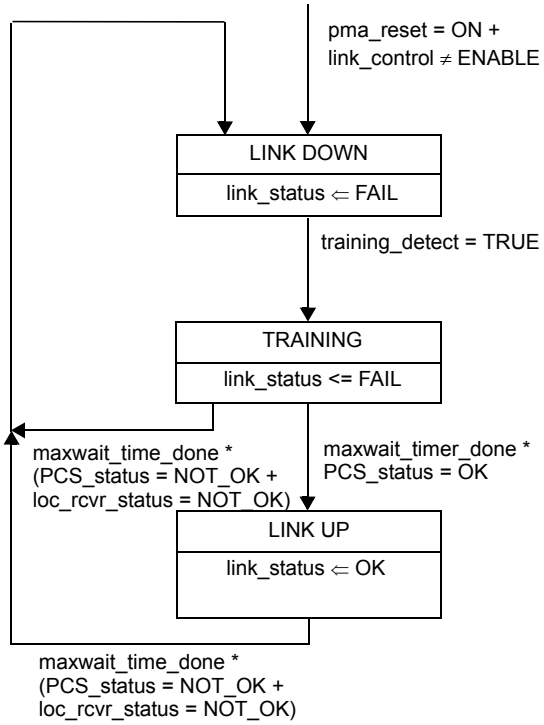

NOTES
1—maxwait_timer is started in PHY Control state diagram (see Figure 55–18).
2—The variables link_control and link_status are designated as link_control_(10GigT) and link_status_(10GigT), respectively, by the Auto-Negotiation Arbitration state diagram (Figure 28–16).

Figure 55–19—Link Monitor state diagram

Copyright © 2005 IEEE. All rights reserved.

55.5 PMA electrical specifications

This subclause defines the electrical characteristics of the PMA and specifies PMA-to-MDI interface tests.

Common-mode tests use the common-mode return point as a reference.

55.5.1 Isolation requirement

The PHY shall provide electrical isolation between the port device circuits, including frame ground (if any) and all MDI leads. This electrical separation shall withstand at least one of the following electrical strength tests:

a) 1500 V rms at 50 Hz to 60 Hz for 60 s, applied as specified in Section 5.3.2 of IEC 60950-1: 2001.
b) 2250 Vdc for 60 s, applied as specified in Section 5.3.2 of IEC 60950-1: 2001.
c) A sequence of ten 2400 V impulses of alternating polarity, applied at intervals of not less than 1 s. The shape of the impulses shall be 1.2/50 µs (1.2 µs virtual front time, 50 µs virtual time or half value), as defined in IEC 60060.

There shall be no insulation breakdown, as defined in Section 5.3.2 of IEC 60950-1: 2001, during the test. The resistance after the test shall be at least 2 MΩ, measured at 500 Vdc.

55.5.2 Test modes

Note: F_s equals 800 MHz ± 50ppm. Later in the text, when a specific tolerance on the symbol rate is not specified, it is assumed to be this.

The test modes described below shall be provided to allow for testing of the transmitter waveform, transmitter distortion, transmitted jitter, transmitter droop and BER testing.

For a PHY with an MDIO management interface, these modes shall be enabled by setting bits 1.132.15:13 (10GBASE-T Control Register[5]) of the MDIO Management register set as shown in Table 55–3. These test modes shall only change the data symbols provided to the transmitter circuitry and shall not alter the electri-

[5]Register changed from 7.9 to 1.132 because it was incorrectly placed in autonegotiation MMD initially.

Copyright © 2005 IEEE. All rights reserved.

cal and jitter characteristics of the transmitter and receiver from those of normal (non-test mode) operation. PHYs without a MDIO shall provide a means to enable these modes for conformance testing.

Table 55–3—MDIO management register settings for test modes

1.132.15	1.132.14	1.132.9.13	Mode
0	0	0	Normal operation
0	0	1	Test mode 1—Setting of MASTER transmitter required by SLAVE for transmit jitter test in SLAVE mode.
0	1	0	Test mode 2—Transmit jitter test in MASTER mode
0	1	1	Test mode 3—Transmit jitter test in SLAVE mode (if loop timing is supported)
1	0	0	Test mode 4—Transmit distortion test
1	0	1	Test mode 5 - Normal operation with no power backoff. This is for the PSD mask and power level test
1	1	0	Test mode 6 - Transmitter droop test mode.
1	1	1	Test mode 7 - Pseudo Random test mode for BER Monitor (Mandatory).

Test mode 1 is a mode provided for enabling testing of timing jitter on a slave transmitter. When test mode 1 is enabled, the PHY shall transmit the PMA training pattern (PRBS 33) continually from all four transmitters with the THP turned off and with no power backoff. In this mode the transmitter shall time the transmitted symbols from its local clock source.

Test mode 2 is for transmitter jitter testing when transmitter is in MASTER timing mode. When test mode 2 is enabled, the PHY shall transmit {2 +16 symbols followed by 2 -16 symbols} continually from all four transmitters with the THP turned off and with no power backoff. In this mode the transmitter shall time the transmitted symbols from its local clock source. In this mode the transmitter will be putting out a 200MHz signal.

Test mode 3 is optional for a PHY that does not support loop timing. When test mode 3 is enabled on a PHY that supports loop timing, the PHY shall transmit, with THP turned off, the data symbol sequence {2 +16 symbols followed by 2 -16 symbols} repeatedly on pair D. A PHY that supports loop timing shall be able to operate in test mode 3 when there is no input signal on pair D. In test mode 3, a PHY that supports loop timing shall time its transmitted symbols from its recovered receive data clock in the SLAVE timing mode. In this mode the transmitter will be putting out a 200MHz signal on pair D and shall transmit silence on pairs A, B and C.

 Copyright © 2005 IEEE. All rights reserved.

Test mode 4 is for transmitter linearity testing. When test mode 4 is enabled, the PHY shall transmit, with the THP turned off, transmitted symbols, timed from an F_S clock in the MASTER timing mode, defined by the bits 7.9.12:10 and Table 55–4.

Table 55–4—MDIO management register settings for transmit frequencies in Test mode 4

1.132.12	1.132.11	1.132.10	Output waveform frequencies in MHz
			Single tone
0	0	0	(800/1024)*53
0	0	1	(800/1024)*101
0	1	0	(800/1024)*167
			Two tone
1	0	0	(800/1024)*179, (800/1024)*181
1	0	1	(800/1024)*277, (800/1024)*281
1	1	0	(800/1024)*397, (800/1024)*401

The peak to peak levels used in this test, for both single and dual frequency tones, shall correspond to the ± 16 symbol levels.

Test mode 5 is for checking whether the transmitter is compliant with the transmit PSD mask and the transmit power level. When test mode 5 is enabled, the PHY shall transmit as in normal operation but with the power backoff disabled.

Test mode 6 is for testing transmitter droop. When test mode 6 is enabled, the PHY shall transmit the following sequence of data symbols A_n, B_n, C_n, D_n, of 55.4.3.1 continually from all four transmitters, with the THP turned off:

{128 +16 followed by 128 -16 symbols}.

Test mode 7 is for enabling measurement of the bit error rate of the link including the LDPC encoder/decoder, the transmit and receive analog front ends of the PHY and a cable connecting two PHYs. This mode reuses the 10GBASE-T PCS scrambler and is defined in detail in 55.3.12?. When in test mode 7, the PHY shall transmit in accordance with 55.3.12? and shall receive data and report the error rate as specified in 55.3.12?.

Copyright © 2005 IEEE. All rights reserved.

55.5.2.1 Test Fixtures

The following fixtures (illustrated by Figure 55–20, Figure 55–21 and Figure 55–22), or their functional equivalents, shall be used for measuring the transmitter specifications described in 55.5.3.

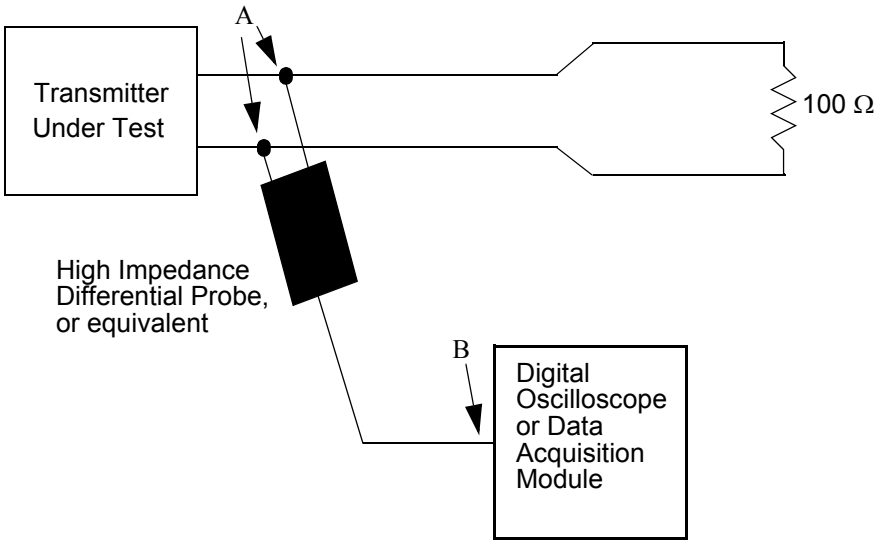

Figure 55–20—Transmitter test fixture 1 for Transmitter droop measurement

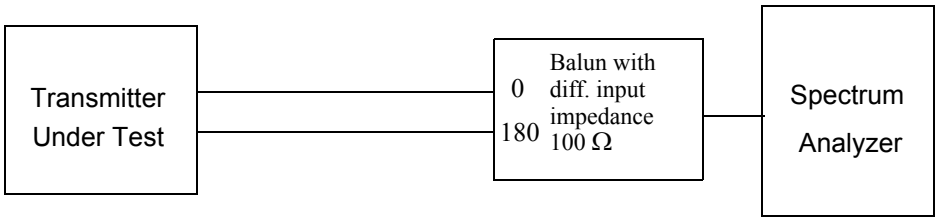

Figure 55–21—Transmitter test fixture 2 for linearity measurement, power spectral density measurement and transmit power level measurement

Copyright © 2005 IEEE. All rights reserved.

Editor's note: Figure 55–21 includes a power summer or Balun device to couple the 100 Ω differential output of the transmitter to the 50 Ω single-ended input typically found in a Spectrum Analyzer input

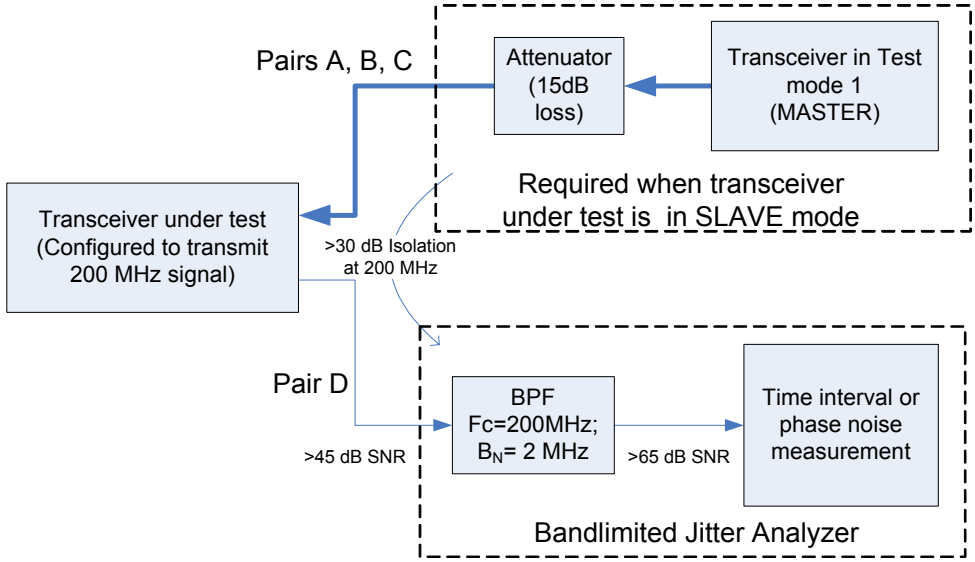

Figure 55–22—Transmitter test fixture 3 for transmitter jitter measurement

55.5.3 Transmitter electrical specifications

The PMA shall provide the Transmit function specified in 55.4.2.2 in accordance with the electrical specifications of this clause.

Where a load is not specified, the transmitter shall meet the requirements of this clause with a 100 Ω resistive differential load connected to each transmitter output.

55.5.3.1 Maximum output droop

With the transmitter in test mode 6 and using the transmitter test fixture 1, the magnitude of both the positive and the negative droop over a period of 0.08 µsec measured after a settling time of 10 nsec after the zero crossing shall be less than 10% of the initial value.

55.5.4 Transmitter linearity.

When in test mode 4 and observing the spectrum of the differential signal output at the MDI using transmitter test fixture 2, for each pair, with no intervening cable, the transmitter linearity mask is defined as follows:

The SFDR of the transmitter when subject to single tone inputs producing output with peak to peak transmit amplitude shall meet the requirement that:

$$SFDR \geq \min\{52, 58 - 20 \times \log 10(f/25)\} \qquad (55\text{–}6)$$

where f is in MHz and $SFDR$ is in dB and the spurs are the intermodulation products in the frequency range of 1 to 400MHz.

Copyright © 2005 IEEE. All rights reserved.

The SFDR of the transmitter, for dual tone inputs, producing output with peak to peak transmit amplitude, shall meet the requirement that:

$$SFDR \geq \quad 2.5 + \min\{52, 58 - 20 \times \log 10(f/25)\} \tag{55–7}$$

where f is in MHz and $SFDR$ is in dB and the spurs are the intermodulation products in the frequency range of 1 to 400MHz.

This specification on transmit linearity is derived from the requirement for interoperability with the far end device.

55.5.5 Transmitter timing jitter

When in test mode 2, the PHY transmits {2 +16 symbols followed by 2 -16 symbols} continually with the THP turned off and with no power backoff. In this mode, the transmitter output shall be a 200 MHz signal and the absolute (i.e., accumulated) jitter measured at the PHY MDI output shall be less than 5.5 ps RMS. The absolute jitter shall be measured as per the test configuration shown in Figure 55–22 over an integration time interval of 1 msec ± 10%.

For a PHY that can operate in loop timed mode, the SLAVE mode transmit jitter test shall be run using the test configuration shown in Figure 55–22. For this test, the MASTER PHY shall be in test mode 1 and the SLAVE PHY shall be in test mode 3. The master will be transmitting the PMA training pattern (PRBS 33) to the Slave PHY on pairs A, B and C. The Slave PHY will be in loop-timed mode, synchronizing its transmit clock to the signals received from the Master PHY on pairs A, B and C. In this configuration, the transmitter output on pair D shall be a 200 MHz signal and the absolute (i.e., accumulated) jitter measured at the Slave PHY MDI output shall be less than 5.5 ps RMS. The absolute jitter shall be measured over an integration time interval of 1 msec ±10%.

55.5.6 Transmitter power spectral density (PSD) and power level

In test mode 5 (normal operation with no power backoff), the transmit power shall be in the range 3.2 dBm to 5.2 dBm and the power spectral density of the transmitter, measured into a 100 Ω, load using the test fixture shown in Figure 55–21 shall be between the upper and lower masks specified in Figure 55–23. The PSD mask constraints corresponds to

$$\text{Upper PSD (f)} \leq \begin{cases} -78 \text{ dBm/Hz} & 1 \leq f \leq 330 \\ -78 - \left(\dfrac{f-330}{40}\right) \text{dBm/Hz} & 330 < f \leq 1850 \\ -116 \text{ dBm/Hz} & 1850 < f \leq 3000 \end{cases} \tag{55–8}$$

and

 Copyright © 2005 IEEE. All rights reserved.

$$\text{Lower PSD (f)} \geq \begin{cases} -84 \text{ dBm/Hz} & 5 \leq f \leq 50 \\ -84 - \left(\frac{f-50}{50}\right) \text{dBm/Hz} & 50 < f \leq 200 \\ -87 - \left(\frac{f-200}{25}\right) \text{dBm/Hz} & 200 < f \leq 400 \end{cases} \quad (55\text{–}9)$$

where f is in MHz.

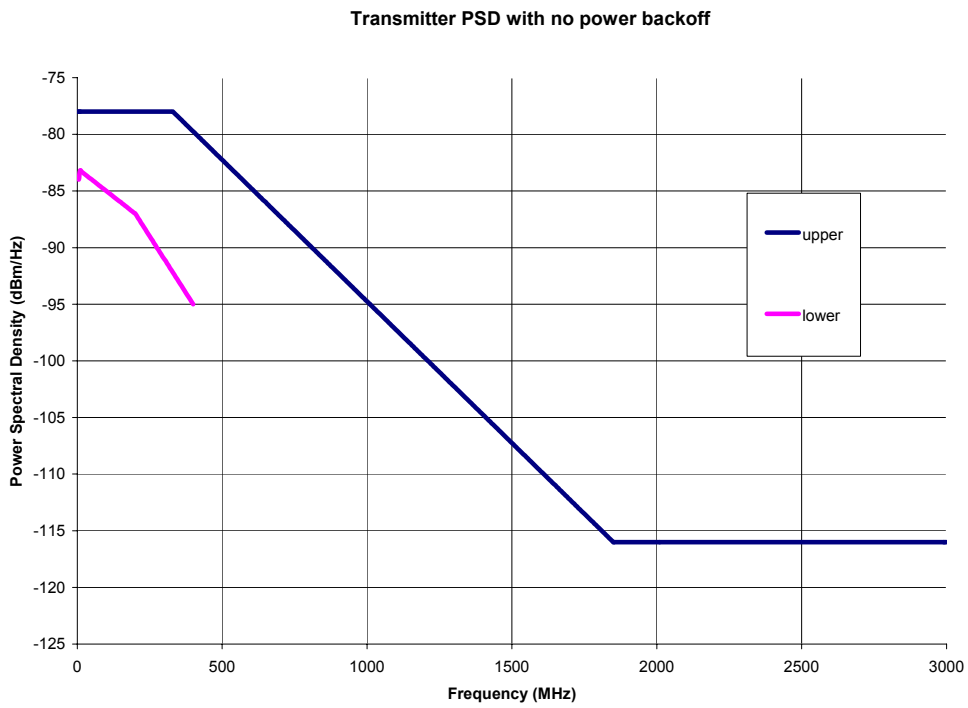

Figure 55–23—Transmitter power spectral density mask

55.5.7 Transmit clock frequency

The symbol transmission rate on each pair of the master PHY shall be F_s which is 800MHz ± 50ppm.

55.5.8 Receiver electrical specifications

The PMA shall provide the Receive function specified in 55.4.2.3 in accordance with the electrical specifications of this clause. The patch cabling and interconnecting hardware used in test configurations shall be within the limits specified in 55.7.

Copyright © 2005 IEEE. All rights reserved.

55.5.8.1 Receiver differential input signals

Differential signals received at the MDI that were transmitted from a remote transmitter within the specifications of 55.5.3 and have passed through a link specified in 55.7 are received with a BER less than 10^{-12} and sent to the PCS after link reset completion. This specification shall be satisfied by an LDPC frame error rate less than $3.2x10^{-9}$.

55.5.8.2 Receiver frequency tolerance

The receive feature shall properly receive incoming data with a symbol rate within the range 800MHz ± 50ppm.

55.5.8.3 Common-mode noise rejection

This specification is provided to limit the sensitivity of the PMA receiver to common-mode noise from the cabling system. Common-mode noise generally results when the cabling system is subjected to electromagnetic fields.

The transceiver shall maintain an LDPC frame error rate less than $3.2x10^{-9}$, while being subject to a common mode voltage <= 2 V peak to peak for f ε (1, 80] MHz, and <= 2*80/f V peak to peak for f ε (80, 500) MHz.

55.5.8.4 Alien Crosstalk noise rejection

While receiving data from a transmitter specified in 55.5.3 through a link segment specified in 55.7 connected to all MDI duplex channels, a receiver shall operate with an LDPC frame error rate of less than $3.2x10^{-9}$ with four noise sources at the specified levels representing alien crosstalk, one connected to each of the four pairs. The noise sources shall be connected to each of the MDI inputs using Category 6 balanced cable of a maximum length of 0.5m. Each noise source should have a flat noise spectrum, with 3 dB bandwidth at least 10 MHz to 400 MHz and a power spectral density of TBD dBm/Hz. See Figure 55–24.

Editor's Note: A flat noise source is chosen to model the sum of all alien noise sources.

 Copyright © 2005 IEEE. All rights reserved.

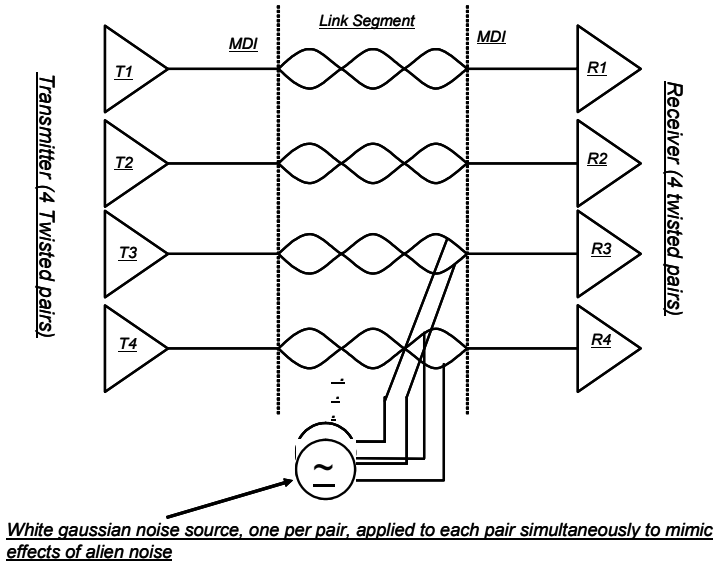

Figure 55–24—Alien noise rejection test

Copyright © 2005 IEEE. All rights reserved.

Copyright © 2005 IEEE. All rights reserved.

55.6 Management interface

10GBASE-T makes extensive use of the management functions provided by the MII Management Interface (see 22.2.4), and the communication and self-configuration functions provided by Auto-Negotiation (Clause 28). Additional Auto-Negotiation requirements are set forth within this subclause.

55.6.1 Support for Auto-Negotiation

All 10GBASE-T PHYs shall provide support for Auto-Negotiation (Clause 28) and shall be capable of operating as MASTER or SLAVE. All 10GBASE-T PHYs shall provide support for extended Next Pages as defined in 28.2.3.4.2 and shall support and use optimized FLP Burst to FLP burst timing as defined in 28.2.1.1.1.

Auto-Negotiation is performed as part of the initial set-up of the link, and allows the PHYs at each end to advertise their capabilities (speed, PHY type, half or full duplex) and to automatically select the operating mode for communication on the link. Auto-negotiation signaling is used for the following primary purposes for 10GBASE-T:

a) To negotiate that the PHY is capable of supporting 10GBASE-T transmission.
b) To determine the MASTER-SLAVE relationship between the PHYs at each end of the link.
c) To negotiate that the PHY is or is not capable of supporting loop timing.

55.6.1.1 10GBASE-T use of registers during Auto-Negotiation

A 10GBASE-T PHY shall use the management register definitions and values specified in Table 55–5.

Table 55–5—10GBASE-T Registers

Register	Bit	Name	Description	Type [a]
7.0	7.0.15:0	AN control register	Defined in 45.2.7.1	R/W
7.1	7.1.15:0	AN status register	Defined in 45.2.7.2	RO
7.2, 7.3	7.2.15:0, 7.3.15:0	AN device identifier registers	Defined in 45.2.7.3	R/W
7.5, 7.6	7.5.15:0 7.6.15:0	AN devices in package registers	Defined in 45.2.7.4	R/W
7.14, 7.15	7.14.15::0 7.15:15.0	AN package identifier registers	Defined in 45.2.7.5	R/W
7.16	7.16.15:0	AN LD advertisement register	Defined in 45.2.7.6	R/W
7.19	7.19.15:0	AN LP base page ability register	Defined in 45.2.7.7	RO
7.22, 7.23, 7.24	7.22.15:0, 7.23.15:0 7.24.15:0	AN LD XNP transmit register	Defined in 45.2.7.8	R/W
7.25, 7.26, 7.27	7.25.15:0, 7.26.15:0 7.27.15:0	AN LP XNP ability register	Defined in 45.2.7.9	RO

[a] R/W = Read/Write, RO = Read Only, SC = Self Clearing, LH = Latch High

Copyright © 2005 IEEE. All rights reserved.

Table 55–5—10GBASE-T Registers *(continued)*

Register	Bit	Name	Description	Type [a]
7.32	7.32.15:0	10GBASE-T AN control register	Defined in 45.2.7.10	R/W
7.33	7.33.15:0	10GBASE-T AN status register	Defined in 45.2.7.11	RO
7.34	7.34.15:0	10GBASE-T AN control 2 register	Defined in 45.2.7.12	
[a] R/W = Read/Write, RO = Read Only, SC = Self Clearing, LH = Latch High				

55.6.1.2 10GBASE-T Auto-Negotiation page use

10GBASE-T PHYs shall exchange a 10GBASE-T and 1000BASE-T formatted extended Next Page, as specified in Table 55–6, immediately following the exchange of the Base Page.

Note that the Acknowledge 2 bit is not utilized and has no meaning when used for the 10GBASE-T message page exchange.

Table 55–6—10GBASE-T Base and Next Pages bit assignments

Bit	Name	Description
BASE PAGE		
D15	Next Page	Defined in 28.2.1.2.6
D14	Acknowledge	Defined in 28.2.1.2.5
D13	Remote Fault	Defined in 28.2.1.2.4
D12	Extended Next Page	Defined in 28.2.1.2.6
D11:D5	Technology Ability Field	Defined in 28.2.1.2.2
D4:D0	Selector Field	Defined in 28.2.1.2.1
Extended Next Page (Message Code Field and Flags Field)		
M10:M0	Next Page Message Code	Defined in Annex 28C
T	Toggle	Defined in 28.2.3.4.7
Ack2	Acknowledge 2	Defined in 28.2.3.4.6
MP	Message Page	Defined in 28.2.3.4.5
Ack	Acknowledge	Defined in 28.2.3.4.4
NP	Next Page	Defined in 28.2.3.4.3
Extended Next Page (Unformatted Message Code Field)		
U31:U24	Reserved transmit as 0	
U23	LP THP IIR set down selection. Local device expects remote to select: (0 = THP IIR filter subset 1 1 = THP IIR filter subset 2)	Defined in 45.2.7.11#CrossRef# THP filter subsets are defined in 55.4.3.1#CrossRef#
U22:21	LP THP FIR set down selection. Local device expects remote to select: (00 = THP FIR filter subset 1 01= THP FIR filter subset 2 10= THP FIR filter subset 3 11= reserved, never sent)	Defined in 45.2.7.11#CrossRef# THP filter subsets are defined in 55.4.3.1#CrossRef#

 Copyright © 2005 IEEE. All rights reserved.

Table 55–6—10GBASE-T Base and Next Pages bit assignments *(continued)*

Bit	Name	Description
U20	LP PMA Training (1 = local device expects remote device to reset PMA Training PRBS every PMA Training frame; 0 = local device expects remote device to run PMA Training PRBS continuously through every PMA Training frame)	Defined in 45.2.7.12.1
U19	LD THP Startup (1 = SLAVE receiver does not expect MASTER transmitter to increment THP during PMA training initialization; 0 = SLAVE receiver does expect MASTER transmitter to increment THP during PMA training initialization)	Defined in 45.2.7.12.2
U18	THP (1 = implements IIR filters and 0 = implements FIR filters)	Defined in 45.2.7.11.9
U17	Loop Timing (1 = support of Loop Timing and 0 = no support)	Defined in 45.2.7.12.3
U16	10GBASE-T full duplex ability (1 = support of 10GBASE-T and 0 = no support)	Defined in 45.2.7.10.4
U15	1000BASE-T half duplex (1 = half duplex and 0 = no half duplex)	
U14	1000BASE-T full duplex (1 = full duplex and 0 = no full duplex)	
U13	Port type bit (1 = multiport device and 0 = single-port device)	Defined in 45.2.7.10.3
U12	10GBASE-T MASTER-SLAVE Config value (1 = MASTER and 0 = SLAVE.) This bit is ignored if 7.32.15 =0.	Defined in 45.2.7.10.1
U11	10GBASE-T MASTER-SLAVE Manual Config Enable (1 = Manual Configuration Enable.) This bit is intended to be used for manual selection in a particular MASTER-SLAVE mode and is to be used in conjunction with bit 7.32.14.	Defined in 45.2.7.10.2
U10	MASTER-SLAVE Seed Bit 10 (SB10) (MSB)	Defined in 45.2.7.10.5
U9	MASTER-SLAVE Seed Bit 9 (SB9)	
U8	MASTER-SLAVE Seed Bit 8 (SB8)	
U7	MASTER-SLAVE Seed Bit 7 (SB7)	
U6	MASTER-SLAVE Seed Bit 6 (SB6)	
U5	MASTER-SLAVE Seed Bit 5 (SB5)	
U4	MASTER-SLAVE Seed Bit 4 (SB4)	
U3	MASTER-SLAVE Seed Bit 3 (SB3)	
U2	MASTER-SLAVE Seed Bit 2 (SB2)	
U1	MASTER-SLAVE Seed Bit 1 (SB1)	
U0	MASTER-SLAVE Seed Bit 0 (SB0)	

55.6.1.3 Sending Next Pages

Implementors who do not wish to send additional Next Pages (i.e., Next Pages in addition to those required to perform PHY configuration as defined in this clause) can use Auto-Negotiation as defined in Clause 28.

Copyright © 2005 IEEE. All rights reserved.

55.6.2 MASTER-SLAVE configuration resolution

Since both PHYs that share a link segment are capable of being MASTER or SLAVE, a prioritization scheme exists to ensure that the correct mode is chosen. The MASTER-SLAVE relationship shall be determined during Auto-Negotiation using Table 55–7 with the 10GBASE-T Technology Ability Next Page bit values specified in Table 55–6 and information received from the link partner. This process is conducted at the entrance to the FLP LINK GOOD CHECK state shown in the Arbitration state diagram (Figure 28–13.)

The following four equations are used to determine these relationships:

manual_MASTER = U0 * U1
manual_SLAVE = U0 * !U1
single-port device = !U0 * !U2,
multiport device = !U0 * U2

where

U0 is bit 11 of 10GBASE-T/1000BASE-T Technology Message Code,
U1 is bit 12 of 10GBASE-T/1000BASE-T Technology Message Code, and
U2 is bit 13 of 10GBASE-T/1000BASE-T Technology Message Code (see Table 55–6).

A 10GBASE-T PHY is capable of operating either as the MASTER or SLAVE. In the scenario of a link between a single-port device and a multiport device, the preferred relationship is for the multiport device to be the MASTER PHY and the single-port device to be the SLAVE. However, other topologies may result in contention. The resolution function of Table 55–7 is defined to handle any relationship conflicts.

In the instance when both link partners support the optional Loop Timing mode, as designated by bit U17, the resolution shown inTable 55–7 shall be used. When only one link partner supports Loop Timing, the device that supports Loop Timing shall be forced to SLAVE and the other device shall be forced to MASTER.

Table 55–7—10GBASE-T MASTER-SLAVE configuration resolution table

Local device type	Remote device type	Local device resolution	Remote device resolution
single-port device	multiport device	SLAVE	MASTER
single-port device	manual_MASTER	SLAVE	MASTER
manual_SLAVE	manual_MASTER	SLAVE	MASTER
manual_SLAVE	multiport device	SLAVE	MASTER
multiport device	manual_MASTER	SLAVE	MASTER
manual_SLAVE	single-port device	SLAVE	MASTER
multiport device	single-port device	MASTER	SLAVE
multiport device	manual_SLAVE	MASTER	SLAVE

 Copyright © 2005 IEEE. All rights reserved.

Table 55–7—10GBASE-T MASTER-SLAVE configuration resolution table *(continued)*

Local device type	Remote device type	Local device resolution	Remote device resolution
manual_MASTER	manual_SLAVE	MASTER	SLAVE
manual_MASTER	single-port device	MASTER	SLAVE
single-port device	manual_SLAVE	MASTER	SLAVE
manual_MASTER	multiport device	MASTER	SLAVE
multiport device	multiport device	The device with the higher SEED value is configured as MASTER, otherwise SLAVE.	The device with the higher SEED value is configured as MASTER, otherwise SLAVE.
single-port device	single-port device	The device with the higher SEED value is configured as MASTER, otherwise SLAVE	The device with the higher SEED value is configured as MASTER, otherwise SLAVE.
manual_SLAVE	manual_SLAVE	MASTER-SLAVE configuration fault	MASTER-SLAVE configuration fault
manual_MASTER	manual_MASTER	MASTER-SLAVE configuration fault	MASTER-SLAVE configuration fault

The rationale for the hierarchy illustrated in Table 55–7 is straightforward. A 10GBASE-T multiport device has higher priority than a single-port device to become the MASTER. In the case where both devices are of the same type, e.g., both devices are multiport devices, the device with the higher MASTER-SLAVE seed bits (SB0...SB10), where SB10 is the MSB, shall become the MASTER and the device with the lower seed value shall become the SLAVE. In case both devices have the same seed value, both should assert link_status_10GigT=FAIL (as defined in 28.3.1) to force a new cycle through Auto-Negotiation. Successful completion of the MASTER-SLAVE resolution shall be treated as MASTER-SLAVE configuration resolution complete.

The method of generating a random or pseudorandom seed is left to the implementor. The generated random seeds should belong to a sequence of independent, identically distributed integer numbers with a uniform distribution in the range of 0 to 2^{11}– 2. The algorithm used to generate the integer should be designed to minimize the correlation between the number generated by any two devices at any given time. A seed counter shall be provided to track the number of seed attempts. The seed counter shall be set to zero at start-up and shall be incremented each time a seed is generated. When MASTER-SLAVE resolution is complete, the seed counter shall be reset to 0 and bit 7.33.15 shall be set to logical zero. A MASTER-SLAVE resolution fault shall be declared if resolution is not reached after the generation of seven seeds.

The MASTER-SLAVE Manual Configuration Enable bit (control register bit 7.32.15) and the MASTER-SLAVE Config Value bit (control register bit 7.32.14) are used to manually set a device to become the MASTER or the SLAVE. In case both devices are manually set to become the MASTER or the SLAVE, this condition shall be flagged as a MASTER-SLAVE Configuration fault condition, thus the MASTER-SLAVE Configuration fault bit (status register bit 7.33.15) shall be set to logical one. The MASTER-SLAVE Configuration fault condition shall be treated as MASTER-SLAVE configuration resolution complete and link_status_10GigT shall be set to FAIL, because the MASTER-SLAVE relationship was not resolved. This will force a new cycle through Auto-Negotiation after the link_fail_inhibit_timer has expired. Determination of MASTER-SLAVE values occur on the entrance to the FLP LINK GOOD CHECK state (Figure 28–16) when the highest common denominator (HCD) technology is 10GBASE-T. The resulting MASTER-SLAVE value is used by the 10GBASE-T PHY control (55.4.2.4).

Copyright © 2005 IEEE. All rights reserved.

If MASTER-SLAVE Manual Configuration is disabled (bit 7.32.15 is set to 0) and the local device detects that both the local device and the remote device are of the same type (either multiport device or single-port device) and that both have generated the same random seed, it generates and transmits a new random seed for MASTER-SLAVE negotiation by setting link_status to FAIL and cycling through the Auto-Negotiation process again.

The MASTER-SLAVE configuration process returns one of the three following outcomes:

a) *Successful:* Bit 7.33.15 of the 10GBASE-T Status Register is set to logical zero and bit 7.33.14 is set to logical one for MASTER resolution or for logical zero for SLAVE resolution. 10GBASE-T returns control to Auto_Negotiation (at the entrance to the FLP LINK GOOD CHECK state in Figure 28–16) and passes the value MASTER or SLAVE to PMA_CONFIG.indicate (see 55.2.4).
b) *Unsuccessful:* link_status_10GigT is set to FAIL and Auto-Negotiation restarts (see Figure 28–16.)
c) *Fault detected:* (This happens when both end stations are set for manual configuration and both are set to MASTER or both are set to SLAVE.) Bit 7.33.15 of the 10GBASE-T Status Register is set to logical one to indicate that a configuration fault has been detected. This bit also is set when seven attempts to configure the MASTER SLAVE relationship via the seed method have failed. When a fault is detected, link_status_10GigT is set to FAIL, causing Auto-Negotiation to cycle through again.

NOTE—MASTER-SLAVE arbitration only occurs if 10GBASE-T or 1000BASE-T is selected as the highest common denominator; otherwise, it is assumed to have passed this condition

 Copyright © 2005 IEEE. All rights reserved.

55.7 10GBASE-T link segment characteristics

10GBASE-T is designed to operate over ISO/IEC 11801 Class E or Class F 4-pair balanced cabling that meets the additional requirements specified in this subclause. Each of the four pairs supports an effective data rate of 2500 Mb/s in each direction simultaneously. The term "link segment" used in this clause refers to four duplex channels. Specifications for a link segment apply equally to each of the four duplex channels. All implementations of the balanced cabling link segment specification shall be compatible at the MDI. It is recommended that the guidelines (proposed) in ANSI/TIA/EIA-TSB-155, ANSI/TIA/EIA-568-B.2-10 and ISO/IEC 11801 Edition 2.1 be considered before the installation of 10GBASE-T equipment for any cabling system.

55.7.1 Cabling system characteristics

The cabling system used to support 10GBASE-T requires 4 pairs of ISO/IEC 11801 Class E or Class F balanced cabling with a nominal impedance of 100 Ω.

Additionally:

a) 10GBASE-T uses a star topology with Class E or Class F balanced cabling used to connect PHY entities.
b) 10GBASE-T is an ISO/IEC 11801 Class E and Class F application with the additional transmission requirements specified in this subclause.

55.7.2 10GBASE-T link transmission parameters

The transmission parameters contained in this subclause are specified to ensure that a 10GBASE-T link segment consisting of at least 55 to 100 meters of Class E and a 10GBASE-T link segment consisting of 100 meters of Class F respectively will provide a reliable medium. The transmission parameters of the link segment include insertion loss, delay parameters, nominal impedance, NEXT loss, ELFEXT loss, and return loss. In addition, the requirements for the alien crosstalk coupled "between" link segments is specified.

Link segment testing shall be conducted using source and load impedances of 100 Ω.

The link segment transmission parameters of insertion loss and ELFEXT loss specified are ISO/IEC 11801 Class E specifications extended by extrapolating the formulas to a frequency up to 500 MHz. The link segment transmission parameters of NEXT loss, MDNEXT loss and Return Loss specified are ISO/IEC 11801 Class E specifications extended beyond 250 MHz by utilizing the equations referenced in TIA/EIA TSB-155 D1.3.

Editor's note: ISO/IEC TR-24750: Assessment of installed Class E and Class F cabling beyond their maximum specified frequencies, should be available before 802.3an is approved. In which case, 802.3an will reference both and may replace the above reference to TIA/EIA TSB-155.

55.7.2.1 Insertion loss

The insertion loss of each duplex channel shall be less than

$$1.05\left(1.82 \times \sqrt{f} + 0.0169 \times f + \frac{0.25}{\sqrt{f}}\right) + 4 \times 0.02 \times \sqrt{f} \qquad \text{(dB)} \qquad (55\text{–}10)$$

at all frequencies from 1 MHz to 500 MHz. This includes the attenuation of the balanced cabling pairs, including work area and equipment cables plus connector losses within each duplex channel. The insertion loss specification shall be met when the duplex channel is terminated in 100 Ω.

Copyright © 2005 IEEE. All rights reserved.

55.7.2.2 Differential characteristic impedance

The nominal differential characteristic impedance of each link segment duplex channel, which includes cable cords and connecting hardware, is 100 Ω for all frequencies between 1 MHz and 500 MHz.

55.7.2.3 Return loss

Each link segment duplex channel shall meet or exceed the return loss specified in the following equation at all frequencies from 1 MHz to 500 MHz. The reference impedance shall be 100 Ω.

$$\text{Return_Loss(f)} = \begin{cases} 19 & 1 \le f < 10 \\ 24 - 5\log 10(f) & 10 \le f < 40 \\ 32 - 10\log 10(f) & 40 \le f < 400 \\ 6 & 400 \le f \le 500 \end{cases} \quad \text{(dB)} \qquad (55\text{–}11)$$

where f is the frequency in MHz.

55.7.2.4 Coupling parameters between duplex channels comprising one link segment

In order to limit the noise coupled into a duplex channel from adjacent duplex channels, Near-End Crosstalk (NEXT) loss and Equal Level Far-End Crosstalk (ELFEXT) loss are specified for each link segment. In addition, each duplex channel can be disturbed by more than one duplex channel. To ensure the total NEXT loss and FEXT loss coupled into a duplex channel is limited, multiple disturber Near-End Crosstalk (MDN-EXT) and multiple disturber ELFEXT (MDELFEXT) loss is specified.

55.7.2.4.1 Differential Near-End Crosstalk

In order to limit the crosstalk at the near end of a link segment, the differential pair-to-pair Near-End Crosstalk (NEXT) loss between a duplex channel and the other three duplex channels is specified to meet the bit error rate objective specified in 55.1. The NEXT loss between any two duplex channels of a link segment shall be at least

$$-20 \times \log 10\left(10^{\frac{74.3 - 15\log 10(f)}{-20}} + 2 \times 10^{\frac{94 - 20\log 10(f)}{-20}}\right) \quad \text{(dB)} \qquad (55\text{–}12)$$

where f is the frequency $(1 \le f < 330)$ in MHz.

The NEXT loss between any two duplex channels of a link segment shall be at least

$$31 - 50 \times \log 10\left(\frac{f}{330}\right) \quad \text{(dB)} \qquad (55\text{–}13)$$

where f is the frequency $(330 \le f \le 500)$ in MHz.

55.7.2.4.2 Multiple Disturber Near-End Crosstalk (MDNEXT) loss

Since four duplex channels are used to transfer data between PMDs, the NEXT that is coupled into a data carrying channel will be from the three adjacent disturbing duplex channels.

 Copyright © 2005 IEEE. All rights reserved.

To ensure the total NEXT coupled into a duplex channel is limited, multiple disturber NEXT loss is specified as the power sum of the individual NEXT losses. The Power Sum loss between a duplex channel and the three adjacent disturbers shall be greater than

$$-20 \times \log 10\left(10^{\frac{72.3 - 15\log 10(f)}{-20}} + 2 \times 10^{\frac{90 - 20\log 10(f)}{-20}}\right) \quad \text{(dB)} \qquad (55\text{–}14)$$

where f is the frequency $1 \le f < 330$ in MHz and

$$28 - 42 \times \log 10\left(\frac{f}{330}\right) \quad \text{(dB)} \qquad (55\text{–}15)$$

where f is the frequency $(330 \le f \le 500)$ in MHz.

55.7.2.4.3 Multiple-Disturber Power Sum Near-End Crosstalk (PS NEXT) loss

PS NEXT loss is determined by summing the power of the three individual pair-to-pair differential NEXT loss values over the frequency range 1 MHz to 500 MHz. as follows:

$$-10 \times \log 10 \sum_{i=1}^{n} 10^{\frac{-NL(f)i}{10}} \quad \text{(dB)} \qquad (55\text{–}16)$$

where

NL(f)i is the magnitude in dB of NEXT loss at frequency f of pair combination i

i is the pair-to-pair combination (1 to n)

n is the number of pair-to-pair combinations

55.7.2.4.4 Equal Level Far-End Crosstalk (ELFEXT) loss

Equal Level Far-End Crosstalk (ELFEXT) loss is specified in order to limit the crosstalk at the far end of each link segment duplex channel and meet the BER objective specified in 55.1.1. Far-End Crosstalk (FEXT) is crosstalk that appears at the far end of a duplex channel (disturbed channel), which is coupled from another duplex channel (disturbing channel) with the noise source (transmitters) at the near end.

Editor's Note: For 1000BASE-T the error rate is specified as symbol error rate, frame error rate and bit error rate. For 10GBASE-T D1.0, as a starting point, the BER objective of 10^-12 specified in 55.1 will be utilized throughout 55.7.

FEXT loss is defined as

$$\text{FEXT_Loss(f)} = 20 \times \log 10\left(\frac{V_{pds(f)}}{V_{pcn(f)}}\right) \quad \text{(dB)} \qquad (55\text{–}17)$$

and ELFEXT_Loss is defined as

Copyright © 2005 IEEE. All rights reserved.

$$\text{ELFEXT_Loss(f)} = 20 \times \log 10\left(\frac{V_{pds(f)}}{V_{pcn(f)}}\right) - \text{SLS_Loss(f)} \qquad (dB) \qquad (55\text{–}18)$$

where

*V*pds	is the peak voltage of disturbing signal (near-end transmitter)
*V*pcn	is the peak crosstalk noise at far end of disturbed channel
SLS_Loss	is the insertion loss of disturbed channel in dB

The worst pair ELFEXT loss between any two duplex channels shall be greater than

$$-20 \times \log 10\left(10^{\frac{67.8 - 20\log 10(f)}{-20}} + 4 \times 10^{\frac{83.1 - 20\log 10(f)}{-20}}\right) \qquad \text{(dB)} \qquad (55\text{–}19)$$

where *f* is the frequency over the range of 1 MHz to 500 MHz.

55.7.2.4.5 Multiple Disturber Equal Level Far-End Crosstalk (MDELFEXT) loss

Since four duplex channels are used to transfer data between PMDs, the FEXT that is coupled into a data carrying channel will be from the three adjacent disturbing duplex channels. To ensure the total FEXT coupled into a duplex channel is limited, multiple disturber ELFEXT loss is specified as the power sum of the individual ELFEXT losses. The Power Sum loss between a duplex channel and the three adjacent disturbers shall be greater than

$$-20 \times \log 10\left(10^{\frac{64.8 - 20\log 10(f)}{-20}} + 4 \times 10^{\frac{80.1 - 20\log 10(f)}{-20}}\right) \qquad \text{(dB)} \qquad (55\text{–}20)$$

where *f* is the frequency over the range of 1 MHz to 500 MHz.

55.7.2.4.6 Multiple-Disturber Power Sum Equal Level Far-End Crosstalk (PS ELFEXT) loss

PS ELFEXT loss is determined by summing the power of the three individual pair-to-pair differential ELFEXT loss values over the frequency range 1 MHz to 500 MHz as follows:

$$\text{PSELFEXT_Loss(f)} = -10 \times \log_{10} \sum_{i=1}^{i=n} 10^{\frac{-EL(f)i}{10}} \qquad (55\text{–}21)$$

where

EL(*f*)i	is the magnitude of ELFEXT loss at frequency *f* of pair combination i
i	is the pair-to-pair combination (1 to n)
n	is the number of pair-to-pair combinations

55.7.2.5 Maximum link delay

The propagation delay of a link segment shall not exceed 570 ns at all frequencies between 2 MHz and 500 MHz.

 Copyright © 2005 IEEE. All rights reserved.

55.7.2.6 Link delay skew

The difference in propagation delay, or skew, between all duplex channel pair combinations of a link segment, under all conditions, shall not exceed 50 ns at all frequencies from 2 MHz to 500 MHz. It is a further functional requirement that, once installed, the skew between any two of the four duplex channels due to environmental conditions shall not vary more than 10 ns within the above requirement.

55.7.3 Coupling parameters between link segments

Noise coupled between the disturbed duplex channel in a link segment and the disturbing duplex channels in other link segments is referred to as alien crosstalk noise.To ensure the total Alien NEXT loss and Alien FEXT loss coupled between link segments is limited, multiple disturber Alien Near-End Crosstalk (MD ANEXT) and multiple disturber Alien FEXT (MDAFEXT) loss is specified. In addition, to ensure the reliable operation of the link segment, a minimum alien crosstalk to insertion loss ratio is specified.

55.7.3.1 Multiple Disturber Alien Near-End Crosstalk (MDANEXT) loss

In order to limit the alien crosstalk at the near end of a link segment, the differential pair-to-pair Near-End Crosstalk (NEXT) loss between the disturbed duplex channel in a link segment and the disturbing duplex channels in other link segments is specified to meet the bit error rate objective specified in 55.1. To ensure the total Alien NEXT coupled into a duplex channel is limited, multiple disturber Alien NEXT loss is specified as the power sum of the individual Alien NEXT disturbers.

55.7.3.1.1 Multiple-Disturber Power Sum Near-End Crosstalk (PS ANEXT) loss

PS ANEXT loss is determined by summing the power of the individual pair-to-pair differential Alien NEXT loss values over the frequency range 1 MHz to 500 MHz. as follows:

$$-10 \times \log 10 \sum_{i=1}^{n} 10^{\frac{-AN(f)i}{10}} \quad \text{(dB)} \qquad (55\text{–}22)$$

where

AN(f)i is the magnitude in dB of ANEXT loss at frequency f of pair combination i

i is the pair-to-pair combination (1 to n)

n is the number of pair-to-pair combinations between link segments

The Power Sum ANEXT loss between a disturbed duplex channel in a link segment and the disturbing duplex channels in other link segments is defined by the equations:

$$PSANEXT \geq \begin{cases} X1 - 10\log 10(\frac{f}{100}) \ \ (dB) & 1 \leq f \leq 100 \\ X1 - 15\log 10(\frac{f}{100}) \ \ (dB) & 100 < f \leq 500 \end{cases} \qquad (55\text{–}23)$$

where f is the frequency in MHz and X1 = the intercept at f=100 MHz.

Copyright © 2005 IEEE. All rights reserved.

The intercept is referred to as the PS ANEXT constant. The PS ANEXT constant is determined in 55.7.3.1.2 constrained by the ratio of the PS ANEXT to the insertion loss.

55.7.3.1.2 PS ANEXT loss to insertion loss ratio requirements

To ensure reliable operation, a minimum insertion loss to alien crosstalk ratio must be maintained. The PS ANEXT loss requirement of 55.7.3.1.1 can be relaxed based on a reduction in the maximum insertion loss specified in 55.7.2.1. The insertion loss reduction can be achieved by utilizing 10GBASE-T link segments less than 100 meters defined by (55–25) or the insertion loss at 250 MHz of the supported cabling types in Table 55–8.

The adjusted PS ANEXT loss requirement is determined by first calculating the PS ANEXT_constant and utilizing the constant in the PS ANEXT limit line model.

The PS ANEXT_constant is defined by the following equation:

$$\text{PSANEXT_constant} = 62 - \frac{10GBTIL(250MHz) - (\text{IL}(250MHz)}{1.04} \quad \text{(dB)} \qquad (55–24)$$

where

10GBTIL(250MHz) is the 10GBASE-T link segment insertion loss at 250 MHz (equation (55–10))

IL(250MHz) is the insertion loss of a 10GBASE-T link segment less than 100 meters (equation (55–25)) or the insertion loss at 250 MHz of the supported cabling types in Table 55–8.

Editor's Note: The variable name CE_IL_250 MHz is changed to 10GBTIL(250MHz) to specify only "one" 10GBASE-T link segment specification independent of cabling types (see comments_1_1104; comment#59). and 802.3an Motion: Date: 17 November 2004: Motion to generate a single worst case link segment in next draft. M: Alan Flatman S: Mike McConnell 14Y/3N/5ATechnical Passes

For the purpose of calculating the 10GBASE-T link segment insertion loss for cabling less than 100 meters the cable insertion loss is assumed to scale linearly with length.

The scaled 10GBASE-T link segment is defined by the following equation:

$$\text{Scaled_10GBT_IL} = \frac{\text{Length_m}}{100} \times 1.05\left(1.82 \times \sqrt{f} + 0.0169 \times f + \frac{0.25}{\sqrt{f}}\right) + 4 \times 0.02 \times \sqrt{f} \text{ (dB)} \qquad (55–25)$$

where Length_m is in meters

 Copyright © 2005 IEEE. All rights reserved.

.Table 55–8 lists the calculated PS ANEXT_constants for the cabling types and distances.

Table 55–8—PS ANEXT Constants for cabling types and distances

Cabling	Distance	PS ANEXT_ constant limit (dB)	PS ANEXT_ constant_avg average of the 4-pairs (dB)	Insertion Loss at 250 MHz (dB)
Class E[a]	100 meters	62	63	35.9
Category 6[b]	55 meters	47	48	20.3
Class F[c]	100 meters	60	61	33.8
Augmented Category 6[d]	100 meters	60	61	33.8

[a]The PS ANEXT for a Class E channel assumes the maximum insertion loss of a Class E channel extrapolated to 500 MHz (Reference: ISO/IEC JTC 1/SC 25 N 981A)
[b]The PS ANEXT for a Category 6 channel assumes the maximum insertion loss of a Category 6 channel of 55 meters extrapolated to 500 MHz specified in TIA/EIA TSB-155 D1.3.
[c]The PS ANEXT for a Class F channel assumes the maximum insertion loss of a Class F channel specified in ISO/IEC 11801.
[d]The PS ANEXT for an Augmented Category 6 channel assumes the maximum insertion loss of an Augmented Category 6 specified in TIA/EIA-568-B.2-10, D1.4

Note: For simulating PHY performance to estimate system margin, the PS ANEXT constant average (average of the four pairs) is increased by 2.5 dB to account for an averaging of the PS ANEXT over frequency.

55.7.3.2 Multiple Disturber Alien Far-End Crosstalk (MDAFEXT) loss

In order to limit the alien crosstalk at the far-end of a link segment, the differential pair-to-pair alien far-end crosstalk loss between the disturbed duplex channel in a link segment and the disturbing duplex channels in other link segments is specified to meet the bit error rate objective specified in 55.1. To ensure the total Alien FEXT coupled into a duplex channel is limited, multiple disturber ELFEXT loss is specified as the power sum of the individual Alien ELFEXT losses.

55.7.3.2.1 Multiple-Disturber Power Sum Alien Equal Level Far-End Crosstalk (PS AELFEXT) loss

Power sum Alien ELFEXT loss is determined by summing the power of the individual pair-to-pair differential Alien ELFEXT loss values over the frequency range 1 MHz to 500 MHz as follows:

$$\text{PS AELFEXT_Loss(f)} = -10 \times \log_{10} \sum_{i=1}^{i=n} 10^{\frac{-EL(f)i}{10}} \qquad (55\text{–}26)$$

where

EL(*f*)i is the magnitude of Alien ELFEXT loss at frequency *f* of pair combination i
i is the 1, 2, or 3 (pair-to-pair combination)
n is the number of pair-to-pair combinations

The PS AELFEXT loss between a disturbed duplex channel in a link segment and the disturbing duplex channels in other link segments is defined by the equation:

Copyright © 2005 IEEE. All rights reserved.

$$PSAELFEXT \geq X2 - 20\log 10(\frac{f}{100}) \quad (dB) \qquad 1 \leq f \leq 500 \tag{55–27}$$

where f is the frequency in MHz and X2 = the intercept at f=100 MHz.

The intercept is referred to as the PS AELFEXT constant. The PS AELFEXT constant is determined in 55.7.3.2.2 by the ratio of the PS AELFEXT to the insertion loss and a length correction term. The insertion loss dependent term maintains the required SNR ratio and the IL independent term enables a relaxation of the PS AELFEXT due the reduction in crosstalk coupling for lengths less than 100 meters.

Table 55–9 lists the PS AELFEXT for the supported cabling types and distances.

55.7.3.2.2 PS AELFEXT loss to insertion loss ratio requirements

To ensure reliable operation, a minimum insertion loss to alien crosstalk ratio must be maintained. The PS AELFEXT loss requirement of 55.7.3.2.1 can be relaxed based on a reduction in the maximum insertion loss specified in 55.7.2.1 and a reduction in the AELFEXT coupling for cabling lengths less than 100 meters.

The adjusted PS AELFEXT loss requirement is determined by first calculating the PS AELFEXT constant and utilizing the constant in the PS AELFEXT limit line model of equation (55–27).

The PS AELFEXT constant is defined by the following equation:

$$\text{PS AELFEXT_constant} = 37 - \left(\frac{10GBTIL(250MHz) - IL(250MHz)}{2.6}\right) - 10\left(\log 10(\frac{L}{100})\right) \quad \text{(dB)} \tag{55–28}$$

where

10GBTIL(250MHz) is the 10GBASE-T link segment insertion loss at 250 MHz (equation (55–10))

IL(250MHz) is the insertion loss of a 10GBASE-T link segment less than 100 meters (equation (55–25)) or the insertion loss of the supported cabling types in Table 55–9 at 250 MHz.

L is the length of the 10GBASE-T link segment. The equation assumes coupling over 100 meters of cable including horizontal cable and cable cords

.Table 55–9 lists the calculated PS AELFEXT_constants for the cabling types and distances.

Table 55–9—PS AELFEXT Constants for cabling types and distances

Cabling	Distance	PS AELFEXT_ constant limit (dB)	PS AELFEXT_ constant_avg average of the 4-pairs (dB)	Insertion Loss at 250 MHz (dB)
Class E[a]	100 meters	37	41	35.9
Category 6[b]	55 meters	33.6	37.6	20.3
Class F[c]	100 meters	37	41	33.8
Augmented Category 6[d]	100 meters	37	41	33.8

 Copyright © 2005 IEEE. All rights reserved.

[a]The PS AELFEXT constant for a Class E channel assumes the maximum insertion loss of a Class E channel extrapolated to 500 MHz (Reference: ISO/IEC JTC 1/SC 25 N 981A).
[b]The PS AELFEXT constant for a Category 6 channel assumes the maximum insertion loss of a Category 6 channel of 55 meters extrapolated to 500 MHz specified in TIA/EIA TSB-155 D1.3.
[c]The PS AELFEXT constant for a Class F channel assumes the maximum insertion loss of a Class F channel (Reference: ISO/IEC JTC 1/SC 25 N 981A) with the calculation result rounded-up to 37.
[d]The PS AELFEXT for an Augmented Category 6 channel assumes the maximum insertion loss for an Augmented Category 6 channel specified in TIA/EIA-568-B.2-10, D1.4 with the calculation result rounded-up to 37.

55.7.4 Noise environment

The 10GBASE-T noise environment consists of noise from many sources. The primary noise sources that impact the objective BER are the crosstalk and echo interference of a link segment, which are reduced to a small residual noise, and the noise coupled between the link segments referred to as alien crosstalk noise. The remaining noise sources, which are secondary sources, are discussed in the following. The 10GBASE-T noise environment consists of the following:

a) Echo from the local transmitter on the same duplex channel (cable pair). Echo is caused by the hybrid function used to achieve simultaneous bi-directional transmission of data and by impedance mismatches in the link segment. It is impractical to achieve the objective BER without using echo cancellation. Since the symbols transmitted by the local disturbing transmitter are available to the cancellation processor, echo interference can be reduced to a small residual noise using echo cancellation methods.

b) Near-End Crosstalk (NEXT) interference from the local transmitters on the duplex channels (cable pairs) of the link segment. Each receiver will experience NEXT interference from three adjacent transmitters. NEXT cancellers are used to reduce the interference from each of the three disturbing transmitters to a small residual noise. NEXT cancellation is possible since the symbols transmitted by the three disturbing local transmitters are available to the cancellation processor.

c) Far-End Crosstalk (FEXT) noise at a receiver is from three disturbing transmitters at the far end of the duplex channel (cable pairs) of the link segment. FEXT noise can be reduced through cross coupled equalizers although the symbols from the remote transmitters are not immediately available.

d) Inter-Symbol Interference (ISI) noise. ISI is the extraneous energy from one signaling symbol that interferes with the reception of another symbol on the same channel. 10GBASE-T supports the use of Tomlinson Harashima Precoding as a mechanism to reduce the effects of ISI.

e) Noise from non-idealities in the duplex channel, transmitters, and receivers; for example, DAC/ADC non-linearity, electrical noise (shot and thermal), and non-linear channel characteristics. 10GBASE-T limits the effects of some of these non-idealities by a variety of PMA electrical specifications

f) Noise coupled between link segments. Noise coupled between the disturbed duplex channel in a link segment and the disturbing duplex channels in other link segments is referred to as alien crosstalk noise. Since the transmitted symbols from the alien crosstalk noise sources are not available to the cancellation processor (they are in another cable), it is very difficult to cancel the alien crosstalk noise. To ensure robust operation the alien crosstalk must meet the specifications of 55.7.3.

g) The background noise for 10GBASE-T is expected not to exceed -150 dBm/Hz. A background noise limit of -150 dBm/Hz was assumed in the 10GBASE-T Matlab simulation models.

Copyright © 2005 IEEE. All rights reserved.

Copyright © 2005 IEEE. All rights reserved.

55.8 MDI specification

This subclause defines the MDI. The link topology requires a crossover function in a DTE-to-DTE connection. See 55.4.4 for a description of the automatic MDI/MDI-X configuration.

55.8.1 MDI connectors

Eight-pin connectors meeting the requirements of subclause 3 and Figures 1 through 4 of IEC 60603-7: 1995 shall be used as the mechanical interface to the balanced cabling. The plug connector shall be used on the balanced cabling and the jack on the PHY. These connectors are depicted (for informational use only) in Figure 55–29 and Figure 55–30. The assignment of PMA signals to connector contacts for PHYs is shown in Table 55–9. The PHY shall be capable of reversing the polarity of the contacts for any PMA signal to correct for a mis-wired channel between any two PHY entities within the link segment.

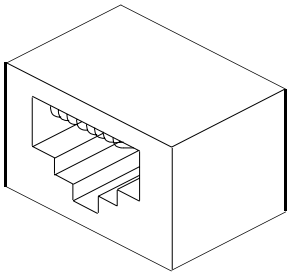

Figure 55–29—MDI connector

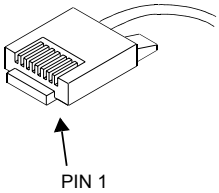

Figure 55–30—Balanced cabling connector

Table 55–9—Assignment of PMA signal to MDI and MDI-X pin-outs

Contact	MDI	MDI-X
1	BI_DA+	BI_DB+
2	BI_DA–	BI_DB–
3	BI_DB+	BI_DA+
4	BI_DC+	BI_DD+
5	BI_DC–	BI_DD–
6	BI_DB–	BI_DA–
7	BI_DD+	BI_DC+
8	BI_DD–	BI_DC–

55.8.2 Crossover function

It is a functional requirement that a crossover function be implemented in every link segment to support the operation of Auto-Negotiation. The crossover function connects the transmitters of one PHY to the receivers

Copyright © 2005 IEEE. All rights reserved.

of the PHY at the other end of the link segment. Crossover functions may be implemented internally to a PHY or else-where in the link segment. The MDI connector for a 10GBASE-T PHY shall be marked with the graphical symbol X. The crossover function specified here is not compatible with the crossover function specified in 14.5.2 for pairs TD and RD.

When a link segment connects a single-port device to a multiport device, it is recommended that the crossover be implemented in the PHY local to the multiport device. It is recommended that the crossover be visible to an installer from one of the PHYs. It is further recommended that, in networks in which the topology identifies either a central backbone segment or a central device, the PHY furthest from the central element be assigned the external crossover to maintain consistency.

Implicit implementation of the crossover function within a twisted-pair cable or at a wiring panel, while not expressly forbidden, is beyond the scope of this standard.

Editor's note: The MDI crossover function has been made mandatory rather than optional.

55.8.3 MDI electrical specifications

The MDI connector (jack) when mated with a specified balanced cabling connector (plug) shall meet the electrical requirements for Category 6 connecting hardware for use with 100-ohm Category 6 cable as specified in ANSI/TIA/EIA-568-B.2:2002 and ISO/IEC 11801:2002.

The mated MDI/balanced cabling connector pair shall have a FEXT loss not less than $43.1 - 20\log_{10}(f/100)$ (where f is the frequency over the range 1 MHz to 500 MHz) between all contact pair combinations shown in Table 55–9.

No spurious signals shall be emitted onto the MDI when the PHY is held in power-down mode (as defined in 22.2.4.1.5), when released from power-down mode, or when external power is first applied to the PHY.

55.8.3.1 MDI return loss

The differential impedance at the MDI for each transmit/receive channel shall be such that any reflection due to differential signals incident upon the MDI from a balanced cabling having a nominal differential characteristic impedance of 100 Ω is attenuated, relative to the incident signal, at least 16 dB over the frequency range of 1.0 MHz to 40 MHz and at least $16 - 10\log_{10}(f/40)$ dB over the frequency range 40 MHz to 500 MHz (f in MHz). This return loss shall be maintained at all times when the PHY is transmitting data or control symbols.

55.8.3.2 MDI impedance balance

Impedance balance is a measurement of the impedance-to-ground difference between the two MDI contacts used by a duplex link channel and is referred to as common-mode-to-differential-mode impedance balance. Over the frequency range 1.0 MHz to 500.0 MHz, the common-mode-to-differential-mode impedance balance of each channel of the MDI shall exceed:

$$45 - 4\log_{10}\left(\frac{f}{50}\right) \quad \text{dB}$$

where f is the frequency in MHz when the transmitter is transmitting random or pseudo random data. Test-mode 4 may be used to generate an appropriate transmitter output. The balance is defined as:

$$20\log_{10}\left(\frac{E_{cm}}{E_{dif}}\right)$$

where E_{cm} is an externally applied sine wave voltage as shown in Figure 55–31 and E_{dif} is the resulting waveform due only to the applied sine wave and not the transmitted data.

 Copyright © 2005 IEEE. All rights reserved.

NOTES

1—Triggered averaging can be used to separate the component due to the applied common-mode sine wave from the transmitted data component.

2—The imbalance of the test equipment (such as the matching of the test resistors) must be insignificant relative to the balance requirements.

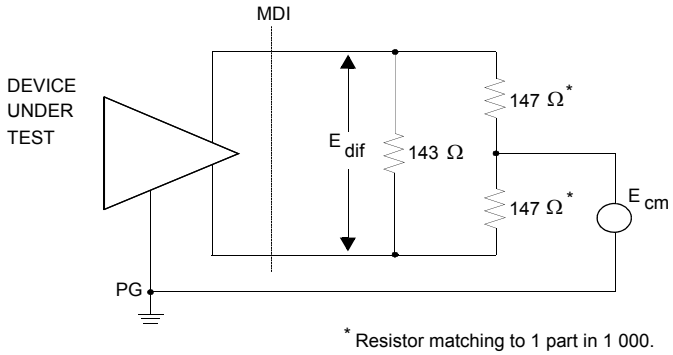

Figure 55–31—MDI impedance balance test circuit

Editor's note: The impedance balance equation was obtained by processing the data provided by Pulse on the magnetics. Other factors contributing to the imbalance may require us to modify the above requirement. Please provide feedback on the feasibility of the above proposal.

55.8.3.3 MDI common-mode output voltage

The magnitude of the total common-mode output voltage, E_{cm_out}, on any transmit circuit, when measured as shown in Figure 55–32, shall be less than 15 mV peak-to-peak when transmitting data.

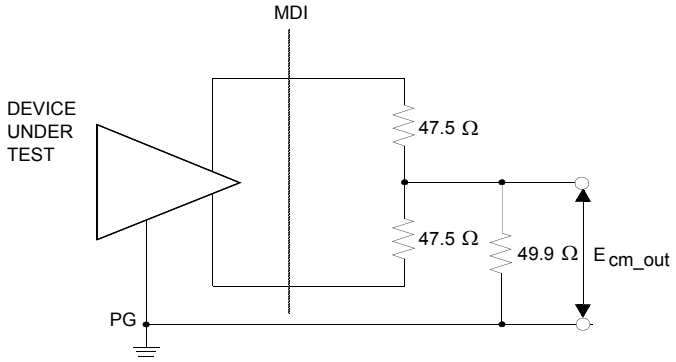

Figure 55–32—Common-mode output voltage test circuit

Editor's note: 1000BASE-T specified 50 mV as the maximum permissible common-mode output voltage. That number has been reduced to 15 mV to because reducing it should make it easier to pass EMI. We need feedback from the Task Force on whether this value is feasible from an implementation point of view from both the PHY vendors and the magnetics manufacturers.

NOTE—The imbalance of the test equipment (such as the matching of the test resistors) must be insignificant relative to the balance requirements.

Copyright © 2005 IEEE. All rights reserved.

55.8.3.4 MDI fault tolerance

Each wire pair of the MDI shall, under all operating conditions, withstand without damage the application of short circuits of any wire to any other wire within the 4-pair cable for an indefinite period of time and shall resume normal operation after the short circuit(s) are removed. The magnitude of the current through such a short circuit shall not exceed 300 mA.

A powered MDI will not disrupt 10GBASE-T and vice versa.

Each wire pair shall withstand without damage a 1000 V common-mode impulse applied at E_{cm} of either polarity (as indicated in Figure 55–33). The shape of the impulse shall be 0.3/50 µs (300 ns virtual front time, 50 µs virtual time of half value), as defined in IEC 60060.

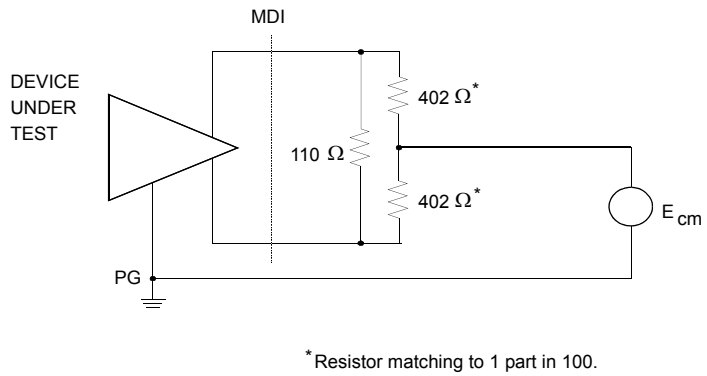

Figure 55–33—MDI fault tolerance test circuit

55.9 Environmental specifications

55.9.1 General safety

All equipment meeting this standard shall conform to IEC 60950-1: 2001.

55.9.2 Network safety

This subclause sets forth a number of recommendations and guidelines related to safety concerns; the list is neither complete nor does it address all possible safety issues. The designer is urged to consult the relevant local, national, and international safety regulations to ensure compliance with the appropriate requirements.

LAN cabling systems described in this subclause are subject to at least four direct electrical safety hazards during their installation and use. These hazards are as follows:

a) Direct contact between LAN components and power, lighting, or communications circuits.
b) Static charge buildup on LAN cabling and components.
c) High-energy transients coupled onto the LAN cabling system.
d) Voltage potential differences between safety grounds to which various LAN components are connected.

Such electrical safety hazards must be avoided or appropriately protected against for proper network installation and performance. In addition to provisions for proper handling of these conditions in an operational

 Copyright © 2005 IEEE. All rights reserved.

system, special measures must be taken to ensure that the intended safety features are not negated during installation of a new network or during modification or maintenance of an existing network.

Editor's note: References have been updated; the frequency range of interest is now from 1MHz to 500MHz. The equations have been updated to reflect this and the formulae have been adjusted.

55.9.3 Installation and maintenance guidelines

It is a mandatory requirement that sound installation practice, as defined by applicable local codes and regulations, be followed in every instance in which such practice is applicable.

It is a mandatory requirement that, during installation of the cabling plant, care be taken to ensure that non-insulated network cabling conductors do not make electrical contact with unintended conductors or ground.

55.9.4 Telephone voltages

The use of building wiring brings with it the possibility of wiring errors that may connect telephony voltages to 10GBASE-T. Other than voice signals (which are low voltage), the primary voltages that may be encountered are the "battery" and ringing voltages. Although there is no universal standard. The following maximums generally apply.

a) Battery voltage to a telephone line is generally 56 Vdc applied to the line through a balanced 400 Ω source impedance.
a) Ringing voltage is a composite signal consisting of an ac component and a dc component. The ac component is up to 175 V peak at 20 Hz to 60Hz with a 100 Ω source resistance. The dc component is 56 Vdc with a 300 to 600 Ω source resistance. Large reactive transients can occur at the start and end of each ring interval.

Although 10GBASE-T equipment is not required to survive such wiring hazards without damage, application of any of the above voltage shall not result in any safety hazard.

55.9.5 Electromagnetic emissions

A system integrating the 10GBASE-T shall comply with applicable local and national codes for the limitation of electromagnetic interference.

55.9.6 Temperature and humidity

A system integrating the 10GBASE-T is expected to operate over a reasonable range of environmental conditions related to temperature, humidity, and physical handling (such as shock and vibration). Specific requirements and values for these parameters are considered to be beyond the scope of this standard.

55.10 PHY labeling

It is recommended that each PHY (and supporting documentation) be labeled in a manner visible to the user with at least the following parameters:

a) Data rate capability in Gb/s
b) Power level in terms of maximum current drain (for external PHYs)
c) Port type (i.e., 10GBASE-T)
d) Any applicable safety warnings

Copyright © 2005 IEEE. All rights reserved.

55.11 Delay constraints

In full duplex mode, predictable operation of the MAC Control PAUSE operation (Clause 31, Annex 31B) also demands that there be an upper bound on the propagation delays through the network. This implies that MAC, MAC Control sublayer, and PHY implementors must conform to certain delay maxima, and that network planners and administrators conform to constraints regarding the cable topology and concatenation of devices.

Every 10GBASE-T PHY associated with a XGMII shall comply with the bit delay constraints specified in Table 55–10 for full duplex operation. These constraints apply for all 10GBASE-T PHYs.

Table 55–10—MDI to XGMII delay constraints (full duplex mode)

Sublayer measurement points	Event	Min. (bit times)	Max (bit times)	Input timing reference	Output timing reference
XGMII ⇔ MDI ⇔XGMII	SFD coming in on XGMII on one PHY and coming out of the XGMII on the other PHY with two PHYs connected back to back with 10m cable	—	TBD	SFD	SFD

Editor's note: Delay is on two PHYs connected back to back however this delay will vary depending on timing of arrival of the SFD on the XGMII relative to start of LDPC code.

 Copyright © 2005 IEEE. All rights reserved.

55.12 Protocol implementation conformance statement (PICS) proforma for Clause 55—Physical coding sublayer (PCS), physical medium attachment (PMA) sublayer and baseband medium, type 10GBASE-T[6]

The supplier of a protocol implementation that is claimed to conform to this clause shall complete the Protocol Implementation Conformance Statement (PICS) proforma listed in the following subclauses.

Instructions for interpreting and filling out the PICS proforma may be found in Clause 21.

55.12.1 Identification

55.12.1.1 Implementation identification

Supplier	
Contact point for queries about the PICS	
Implementation Name(s) and Version(s)	
Other information necessary for full identification—e.g., name(s) and version(s) for machines and/or operating systems; System Name(s)	
NOTES 1—Only the first three items are required for all implementations; other information may be completed as appropriate in meeting the requirements for the identification. 2—The terms Name and Version should be interpreted appropriately to correspond with a supplier's terminology (e.g., Type, Series, Model).	

55.12.1.2 Protocol summary

Identification of protocol specification	IEEE Std 802.an:?, Clause 55, Physical coding sublayer (PCS), physical medium attachment (PMA) sublayer, and baseband medium, type 10GBASE-T
Identification of amendments and corrigenda to this PICS proforma which have been completed as part of this PICS	
Have any Exceptions items been required? No [ ] Yes [ ] (See Clause 21—The answer Yes means that the implementation does not conform to the standard)	
Date of Statement	

55.12.2 Major capabilities/options

Item	Feature	Subclause	Status	Support	Value/Comment
*XGMII	PHY associated with XGMII		O	Yes [ ] No [ ]	

[6]*Copyright release for PICS proformas:* Users of this standard may freely reproduce the PICS proforma in this subclause so it can be used for its intended purpose and may further publish the completed PICS.

Copyright © 2005 IEEE. All rights reserved.

Item	Feature	Subclause	Status	Support	Value/Comment

55.12.3 Clause conventions

Item	Feature	Subclause	Status	Support	Value/Comment
CCO1	The values of all components in test circuits shall be		M	Yes [ ]	Accurate to within ±1% unless otherwise stated.

55.12.4 Physical Coding Sublayer (PCS)

Item	Feature	Subclause	Status	Support	Value/Comment
PCT1	The PCS shall		M	Yes [ ]	

55.12.4.1 PCS receive functions

Item	Feature	Subclause	Status	Support	Value/Comment
PCR1	PCS Receive function shall		M	Yes [ ]	

55.12.4.2 Other PCS functions

Item	Feature	Subclause	Status	Support	Value/Comment
PCO1	The PCS Reset function shall		M	Yes [ ]	

Copyright © 2005 IEEE. All rights reserved.

55.12.5 Physical Medium Attachment (PMA)

Item	Feature	Subclause	Status	Support	Value/Comment
PMF1	PMA Reset function shall be executed		M	Yes [ ]	At power on and upon receipt of a reset request from the management entity or from PHY Control.
PMF2	PMA Transmit shall		M	Yes [ ]	
PMF3	The four transmitters shall be driven by the same transmit clock, TX_TCLK		M	Yes [ ]	
PMF4	PMA Transmit shall		M	Yes [ ]	Follow the mathematical description given in .
PMF5	PMA Transmit shall comply with		M	Yes [ ]	The electrical specifications given in .
PMF6	When the PMA_CONFIG.indicate parameter config is MASTER, the PMA Transmit function shall		M	Yes [ ]	Source the transmit clock TX_TCLK from a local clock source while meeting the transmit jitter requirements of .
PMF7	When the PMA_CONFIG.indicate parameter config is SLAVE, the PMA Transmit function shall		M	Yes [ ]	Source the transmit clock TX_TCLK from the recovered clock of while meeting the jitter requirements of .

55.12.6 Management interface

Item	Feature	Subclause	Status	Support	Value/Comment
MF1	All 10GBASE-T PHYs shall provide support for Auto-Negotiation (Clause 28) and shall be capable of operating as MASTER.		M	Yes [ ]	

55.12.6.1 10GBASE-T Specific Auto-Negotiation Requirements

Item	Feature	Subclause	Status	Support	Value/Comment
AN1	10GBASE-T PHYs shall		M	Yes [ ]	
AN2	The MASTER-SLAVE relationship shall be determined during Auto-Negotiation		M	Yes [ ]	

Copyright © 2005 IEEE. All rights reserved.

55.12.7 PMA Electrical Specifications

Item	Feature	Subclause	Status	Support	Value/Comment
PME3	The PHY shall provide electrical isolation between		M	Yes [ ]	The port device circuits including frame ground, and all MDI leads.

55.12.8 Characteristics of the link segment

Item	Feature	Subclause	Status	Support	Value/Comment
LKS1	All implementations of the balanced cabling link shall		M	Yes [ ]	Be compatible at the MDI.

55.12.9 MDI requirements

Item	Feature	Subclause	Status	Support	Value/Comment
MDI1	MDI connector		M	Yes [ ]	8-Way connector as per IEC .

Copyright © 2005 IEEE. All rights reserved.

Annex 55A

(normative)

The Parity Check Matrix P

10GBASE-T uses a generator matrix G to specify the LDPC code encoding. G can also be constructed from the parity check matrix P because G=[I P]. The parity check matrix contains 1723 rows and 325 columns. The tables below represent a condensed form of P. The rows of P are identified in the first column of the tables as R1 to R1723. The columns of the tables, C1 to C113, represent the location of a “1” in the column indices (1 to 325) of P. All other entries of P are “0”. For example, R1 and C1 of Table 55A–1 contains the value 45; therefore, row 1, column 45 of P contains a “1” and row 1, columns 1 through 44 contain “0”.

Table 55A–1 contains the first set of location values, 1 to 24. Table 55A–2 contains the second location values, 25 to 48. Table 55A–3 contains the thirst set of location values, 49 to 72. Table 55A–4 contains the fourth set of location values, 73 to 96. Table 55A–5 contains the final set of location values, 97 to 113.

Copyright © 2005 IEEE. All rights reserved.
This is an unapproved draft, subject to change

Table 55A–1—P matrix: location 1 to 24

	C1	C2	C3	C4	C5	C6	C7	C8	C9	C10	C11	C12	C13	C14	C15	C16	C17	C18	C19	C20	C21	C22	C23	C24
R1	45	63	97	113	145	164	167	175	184	185	186	190	194	196	198	199	200	202	205	214	216	217	219	221
R2	1	18	98	107	122	125	136	181	182	189	191	198	199	202	208	209	216	226	229	230	232	233	238	241
R3	62	92	121	146	160	163	165	168	188	192	194	197	198	200	201	202	204	205	206	207	209	210	211	212
R4	1	98	107	120	135	150	154	169	176	179	182	188	189	198	202	205	208	215	221	223	224	226	228	230
R5	32	91	119	155	165	171	178	180	187	193	197	200	201	206	207	210	211	212	213	217	218	219	222	223
R6	96	106	134	162	167	173	179	184	190	195	197	198	199	200	201	202	203	204	205	206	207	208	209	210
R7	17	44	76	98	105	107	114	155	158	163	166	170	173	177	191	195	199	203	208	216	221	223	225	226
R8	31	43	126	131	133	141	149	161	171	177	179	181	183	185	187	188	189	190	191	193	200	208	213	215
R9	1	42	98	104	107	108	144	148	160	162	182	185	189	192	195	197	198	200	201	202	204	205	206	208
R10	30	61	114	127	144	157	158	162	168	173	174	183	188	195	196	197	200	201	203	204	205	206	207	208
R11	95	132	153	154	155	168	171	181	187	193	214	221	222	223	224	225	227	229	230	231	232	233	236	237
R12	16	29	60	104	128	167	172	183	184	189	190	194	198	199	202	205	208	215	220	223	226	227	230	236
R13	15	105	131	147	162	163	177	191	195	197	200	201	203	204	206	207	208	209	210	211	212	214	217	219
R14	94	146	165	173	195	217	223	226	230	231	232	239	240	241	242	243	244	249	250	251	252	253	254	255
R15	28	85	88	90	114	140	155	158	161	162	170	173	188	189	190	191	192	194	195	197	199	200	201	203
R16	1	14	27	98	106	107	130	154	182	184	198	199	208	213	216	226	228	229	230	232	233	234	241	243
R17	1	75	98	107	161	166	182	190	193	198	199	202	203	205	208	214	216	219	221	225	226	229	230	232
R18	1	13	74	98	107	158	182	186	196	198	199	202	205	223	228	229	230	233	235	236	243	244	245	246
R19	73	103	127	157	162	171	175	178	183	185	187	188	197	200	201	203	204	206	207	208	209	210	211	212
R20	12	26	59	94	109	122	123	126	145	154	167	171	172	173	175	176	181	183	184	185	187	188	190	194
R21	1	98	107	156	182	189	198	199	201	202	203	204	205	206	207	209	210	211	212	213	214	215	217	219
R22	11	25	120	160	164	169	175	179	185	186	190	192	193	195	196	199	203	204	208	209	214	224	237	240
R23	41	58	72	102	105	112	127	146	163	165	168	180	183	186	195	196	202	203	205	208	213	214	220	224
R24	1	24	57	71	98	107	122	137	152	154	169	172	182	183	189	190	197	198	199	200	201	202	203	204
R25	1	40	93	98	107	144	148	159	162	168	177	182	184	185	189	191	193	198	199	202	203	205	207	211
R26	1	23	39	97	98	107	127	143	160	165	169	173	175	179	182	183	189	192	193	195	198	200	202	203
R27	10	22	56	70	89	103	111	112	124	146	157	162	165	168	171	178	187	188	193	194	196	198	199	214
R28	1	38	84	92	93	98	107	129	133	141	159	161	168	171	177	179	183	185	187	188	190	197	198	199
R29	1	9	55	96	98	107	138	143	152	167	169	174	175	179	182	184	185	187	189	190	194	195	197	200
R30	54	69	118	131	147	155	157	158	188	189	208	209	213	222	224	226	229	234	235	237	239	242	243	246
R31	1	83	92	98	99	107	117	138	165	168	174	182	188	189	195	198	199	202	205	209	213	223	224	226
R32	1	53	91	98	101	107	160	171	175	178	182	185	187	189	194	195	203	216	223	224	225	226	232	233
R33	52	162	172	177	191	208	216	227	230	232	238	240	241	244	246	249	250	252	254	255	256	258	259	264
R34	1	98	107	116	167	182	184	189	190	198	199	202	205	207	208	212	215	216	222	223	226	227	228	229
R35	1	68	98	107	115	154	160	163	167	182	184	185	189	190	192	194	197	200	201	204	206	207	208	209
R36	82	98	114	128	130	154	158	162	171	173	185	187	191	193	197	201	203	204	206	207	208	209	210	211
R37	1	8	51	98	102	107	110	150	151	154	157	171	174	176	177	182	187	189	191	193	205	208	215	216
R38	37	90	135	154	155	162	164	186	195	196	197	198	200	201	202	203	204	205	206	207	208	209	210	211
R39	1	67	97	98	107	113	132	152	154	164	169	181	182	186	189	196	197	201	203	204	206	207	209	210
R40	36	158	164	176	182	186	196	198	199	202	205	216	223	226	234	236	238	239	240	241	244	250	251	253
R41	21	66	89	102	123	128	160	168	176	188	192	194	195	197	198	200	201	204	206	207	209	210	211	212
R42	1	7	20	35	65	98	107	108	117	118	127	129	138	150	154	160	163	165	167	171	174	176	177	184
R43	1	98	101	107	142	159	160	175	182	185	189	192	198	202	205	208	217	224	226	231	233	235	236	239
R44	1	98	107	112	158	165	175	182	185	189	193	194	197	200	201	202	204	205	206	207	208	209	210	211
R45	1	6	81	98	105	107	115	125	163	164	165	167	179	182	184	186	187	189	190	193	195	196	214	215
R46	1	50	98	107	121	141	147	161	163	179	180	182	185	190	195	198	199	202	205	213	216	221	223	224
R47	1	5	98	107	126	151	181	182	188	189	208	213	222	226	229	233	237	239	242	247	249	251	254	255
R48	4	49	93	100	116	119	140	156	159	161	167	177	178	184	191	193	202	205	207	215	219	223	225	226
R49	3	48	80	91	117	141	154	161	165	169	171	173	179	185	187	189	190	193	197	200	208	213	215	216
R50	19	79	125	129	171	173	182	187	188	189	193	207	214	220	223	225	233	235	236	239	243	244	246	247
R51	1	98	107	110	124	157	182	188	189	198	199	202	203	205	226	229	233	234	236	240	243	244	245	246
R52	34	64	90	95	100	134	156	162	164	168	173	186	189	196	197	200	201	203	204	206	207	209	210	211
R53	33	47	78	94	125	136	143	154	155	173	175	177	185	191	192	193	195	198	202	205	213	214	226	228
R54	1	2	98	107	109	123	142	165	172	173	176	182	187	189	193	197	198	199	200	201	202	203	204	205
R55	15	31	105	121	131	141	161	162	177	179	180	185	189	190	191	197	200	201	203	204	206	207	209	210
R56	94	112	124	173	174	195	202	217	221	226	231	232	234	239	241	243	247	249	250	253	255	256	257	258
R57	1	34	95	98	107	130	146	154	162	165	168	174	182	189	197	198	200	201	202	203	204	206	207	209
R58	1	14	33	83	94	98	99	106	107	136	138	143	154	161	162	166	173	174	175	182	185	189	190	193
R59	193	260	267	280	281	285	286	289	291	293	295	297	300	301	306	307	312	316	321	322	323	324	325	
R60	13	47	52	125	162	171	172	177	186	187	189	191	193	195	196	198	199	202	205	213	214	216	221	224

Copyright © 2005 IEEE. All rights reserved.
This is an unapproved draft, subject to change

Table 55A–1—P matrix: location 1 to 24

	C1	C2	C3	C4	C5	C6	C7	C8	C9	C10	C11	C12	C13	C14	C15	C16	C17	C18	C19	C20	C21	C22	C23	C24
R61	1	51	98	107	108	110	116	154	157	160	174	177	182	183	188	189	191	192	194	195	197	198	200	201
R62	1	12	37	98	107	123	135	146	154	155	165	176	182	185	189	195	198	202	205	208	215	220	221	223
R63	41	73	102	137	146	156	165	172	175	185	193	194	198	199	202	205	208	216	217	220	221	232	234	236
R64	11	24	59	109	120	146	152	159	165	169	172	177	179	183	191	193	197	200	201	206	207	211	213	217
R65	107	125	181	201	203	204	206	207	209	210	211	212	213	215	216	217	219	221	223	224	225	226	227	228
R66	1	25	98	107	111	163	164	174	175	182	185	186	189	193	194	195	196	197	200	201	203	204	205	206
R67	1	78	93	98	107	114	135	154	155	158	159	173	177	182	189	191	193	197	198	200	201	202	204	205
R68	1	98	102	107	170	182	189	198	199	202	204	205	208	209	214	215	217	220	221	226	229	231	232	233
R69	1	10	32	91	98	107	122	127	154	163	171	180	182	183	187	189	191	193	194	195	204	208	209	214
R70	1	62	68	92	98	107	146	159	163	165	168	178	180	182	188	189	193	195	198	199	202	203	205	213
R71	1	9	80	91	98	107	117	120	128	138	141	143	158	161	165	169	171	174	175	182	190	193	194	205
R72	155	252	260	265	266	268	269	271	275	279	280	290	295	299	301	303	305	307	308	309	311	313	314	315
R73	92	115	142	163	167	168	184	188	190	195	199	202	205	214	215	216	217	221	230	231	232	236	239	241
R74	1	75	84	91	93	98	107	110	133	141	157	159	161	165	166	171	174	177	179	182	183	185	187	188
R75	187	193	245	258	259	264	265	266	267	273	275	277	280	281	285	289	290	291	293	299	303	305	309	311
R76	54	72	105	112	147	163	168	194	195	196	197	198	199	200	201	204	206	207	210	211	214	219	220	225
R77	1	26	57	94	98	107	117	122	126	159	165	171	173	181	182	183	187	188	189	195	203	216	218	220
R78	1	40	55	74	86	96	98	107	131	148	158	161	162	167	177	179	182	185	191	195	197	198	199	200
R79	1	8	23	77	97	98	99	107	118	127	150	151	160	166	167	171	177	178	182	183	184	187	188	190
R80	66	90	102	123	162	164	176	186	188	192	194	195	196	199	211	213	215	219	221	223	224	225	226	230
R81	1	35	76	107	108	129	139	157	167	171	177	182	184	187	188	189	190	191	193	198	199	202	205	207
R82	1	89	98	101	107	133	160	162	168	175	182	183	185	189	192	193	197	199	200	201	204	206	207	208
R83	1	42	88	98	107	108	143	144	160	167	168	170	175	182	184	185	188	189	190	192	193	195	197	198
R84	7	30	36	56	89	103	114	118	127	144	157	162	163	164	171	173	177	178	182	186	187	188	189	190
R85	1	21	38	92	98	107	128	131	160	168	177	182	188	189	192	194	195	197	199	200	201	202	204	206
R86	1	53	64	90	98	100	101	107	134	156	160	162	164	173	175	182	185	186	193	194	195	196	216	217
R87	6	28	88	105	125	150	163	164	170	176	179	186	191	192	194	196	197	199	200	201	203	204	208	209
R88	5	63	87	106	113	119	149	155	162	164	165	178	186	196	197	201	204	206	207	209	210	211	212	215
R89	1	4	98	106	107	116	162	165	167	182	184	189	190	197	198	199	200	201	202	203	204	205	206	210
R90	3	43	126	138	152	169	171	173	174	181	187	188	193	198	199	201	202	203	204	206	207	208	210	211
R91	1	46	58	69	98	104	107	131	139	153	155	158	160	167	171	177	184	187	189	190	191	192	193	195
R92	1	85	90	98	107	114	140	147	155	158	161	162	164	166	173	182	186	190	196	203	208	213	216	220
R93	221	261	267	271	281	286	291	295	301	303	311	314	319	322	324									
R94	27	144	164	168	184	186	196	208	214	216	217	221	228	230	231	234	235	236	237	239	240	242	243	244
R95	1	67	97	98	103	107	132	151	152	154	157	162	169	178	181	182	188	189	197	201	203	204	206	207
R96	99	140	155	161	166	189	190	195	197	200	201	204	206	207	208	209	210	211	212	213	214	216	217	219
R97	1	48	82	107	130	145	162	167	175	182	184	189	190	191	193	194	208	215	219	222	225	226	234	236
R98	1	81	98	107	115	149	160	165	167	182	184	189	190	192	194	195	197	201	204	206	208	209	210	211
R99	1	107	113	141	153	155	161	164	168	171	179	182	185	187	190	193	198	199	202	205	214	217	222	223
R100	1	97	98	107	126	171	172	179	181	182	187	188	189	193	197	201	203	204	206	207	209	210	211	212
R101	1	18	70	98	107	111	122	124	125	154	163	167	180	182	184	189	190	195	203	205	208	214	215	220
R102	1	71	98	107	122	129	137	154	171	172	175	185	187	189	194	198	199	202	205	207	214	221	224	225
R103	39	50	121	147	148	162	163	165	169	173	180	195	197	200	201	203	204	206	208	209	210	211	212	214
R104	1	22	61	98	107	112	146	162	165	174	182	189	197	200	201	202	204	206	207	208	209	210	211	212
R105	60	96	100	104	156	179	189	194	195	197	198	199	200	201	202	203	204	205	206	207	209	210	211	212
R106	17	29	49	93	114	119	155	158	159	165	170	173	177	178	183	189	191	193	197	199	200	201	202	203
R107	1	20	45	98	107	117	138	145	150	157	165	167	174	175	176	182	184	185	189	190	194	205	208	209
R108	95	123	168	176	182	198	199	202	205	214	216	218	221	223	224	229	231	236	238	239	240	243	247	248
R109	16	105	109	128	134	163	172	173	195	197	198	199	200	201	202	203	204	205	206	207	208	209	210	211
R110	44	65	79	107	129	136	155	166	171	182	184	187	193	198	199	202	203	205	207	220	222	225	229	230
R111	1	2	98	107	132	142	154	165	181	182	187	189	193	195	208	217	221	224	226	227	228	233	234	235
R112	1	49	87	93	98	106	107	119	146	149	155	159	162	177	178	182	189	191	193	198	199	200	208	213
R113	1	19	93	98	107	138	148	159	162	173	174	177	182	185	188	191	193	198	199	202	203	207	208	209
R114	1	46	61	74	79	98	107	129	139	153	155	157	158	160	162	174	182	188	189	192	194	195	199	203
R115	1	10	98	107	163	182	189	194	195	197	200	201	203	204	206	207	209	210	211	212	213	214	216	217
R116	29	76	98	124	174	177	183	189	191	203	205	213	215	222	224	226	229	235	237	244	247	249	252	253
R117	1	9	34	67	85	90	95	97	98	107	114	132	133	138	140	143	152	154	155	158	161	162	164	168
R118	1	33	42	94	98	107	108	136	143	144	154	155	160	167	168	173	175	182	184	185	189	190	192	193
R119	1	30	65	86	92	98	107	114	127	131	144	154	158	161	173	177	182	183	188	190	191	196	198	199
R120	1	77	91	98	99	107	166	167	171	178	182	184	187	189	190	192	193	194	199	203	215	223	225	226

Copyright © 2005 IEEE. All rights reserved.
This is an unapproved draft, subject to change

Table 55A–1—P matrix: location 1 to 24

	C1	C2	C3	C4	C5	C6	C7	C8	C9	C10	C11	C12	C13	C14	C15	C16	C17	C18	C19	C20	C21	C22	C23	C24
R121	1	98	103	107	112	157	162	171	178	182	187	188	189	193	197	198	199	200	201	204	206	207	208	209
R122	139	157	160	182	188	192	194	195	197	200	201	204	206	207	209	210	211	213	214	217	219	220	225	226
R123	161	170	189	190	202	205	208	215	226	236	239	245	246	247	250	253	255	257	259	261	262	264	265	279
R124	1	8	75	98	107	127	150	151	166	171	176	182	183	187	189	193	198	199	202	203	205	214	215	219
R125	1	20	84	90	93	98	107	117	133	138	141	150	161	162	164	165	174	176	177	179	182	183	185	186
R126	1	98	107	132	154	158	181	182	189	194	197	198	199	200	201	202	203	204	205	206	207	209	210	211
R127	26	54	68	94	122	126	147	154	160	163	171	181	187	188	192	193	194	195	197	199	200	201	204	206
R128	89	117	128	165	168	213	214	220	224	229	244	248	250	253	254	257	259	261	262	263	267	268	269	271
R129	88	123	170	171	176	187	188	193	215	220	223	225	230	231	232	233	236	239	240	241	243	246	247	249
R130	1	7	51	98	107	109	110	118	154	157	163	172	174	182	183	188	195	197	200	201	203	204	206	207
R131	1	37	53	98	101	107	135	154	155	160	175	182	185	189	190	193	194	197	199	200	201	204	206	207
R132	1	81	98	107	115	131	165	167	177	182	184	189	190	191	198	202	205	215	216	221	222	229	230	233
R133	1	6	98	105	107	125	141	161	163	175	182	190	193	194	195	197	198	199	200	201	202	203	204	205
R134	28	41	88	102	126	127	146	164	165	170	171	181	183	186	187	191	192	193	194	195	196	197	199	200
R135	5	24	50	121	147	152	159	163	169	180	181	190	193	195	198	199	202	203	205	208	213	216	217	222
R136	1	4	58	98	107	116	165	167	182	184	189	190	198	199	202	205	207	208	213	215	216	221	224	226
R137	1	3	98	100	107	135	154	156	173	174	182	198	201	202	203	204	206	207	208	209	210	211	212	213
R138	1	32	43	70	80	98	107	111	117	124	126	141	161	163	165	171	179	180	181	182	185	187	188	190
R139	47	104	125	129	167	171	177	182	184	187	190	191	193	194	195	197	198	199	200	201	202	203	204	205
R140	1	73	98	107	108	127	160	163	167	175	182	183	184	185	189	190	192	193	198	202	203	205	215	216
R141	59	109	110	146	157	165	172	174	178	183	188	197	200	201	203	204	205	206	207	208	209	210	211	212
R142	180	201	203	204	206	207	208	209	210	211	212	213	214	215	216	217	219	222	224	225	226	228	229	231
R143	1	25	71	98	99	107	122	137	153	154	155	164	166	171	172	175	182	185	186	187	189	194	195	196
R144	83	99	105	115	138	163	166	167	172	174	184	190	197	199	200	201	204	205	206	207	208	210	211	212
R145	39	165	167	169	173	184	185	190	200	223	225	226	230	233	236	238	240	244	250	254	255	257	260	262
R146	22	52	112	146	162	165	172	202	203	205	207	208	216	218	220	221	224	229	231	235	236	244	245	248
R147	98	116	134	150	167	173	176	184	188	190	198	199	202	205	207	215	216	221	222	226	232	234	236	237
R148	44	97	107	145	155	166	167	175	184	190	193	194	197	198	199	201	202	204	205	206	207	209	210	211
R149	18	31	119	122	125	131	141	147	151	154	155	161	165	171	177	178	179	185	187	189	190	191	193	198
R150	1	98	106	107	140	155	160	161	162	182	190	192	194	195	197	199	200	201	204	209	213	215	217	218
R151	48	154	186	196	217	219	224	225	226	229	231	232	233	235	236	239	241	244	245	246	247	248	249	250
R152	27	63	78	113	155	164	184	186	196	208	214	216	217	221	230	231	233	235	239	240	243	244	245	247
R153	1	96	98	107	122	154	167	169	179	182	184	190	195	196	198	199	202	205	215	221	224	233	235	236
R154	1	17	45	98	107	114	125	145	158	167	170	173	175	182	184	185	189	190	194	198	202	205	214	216
R155	55	96	111	163	167	174	179	184	190	198	199	202	205	215	216	220	221	223	225	231	232	233	240	241
R156	1	60	98	104	107	118	144	167	168	177	182	184	190	191	194	197	200	201	203	204	206	207	208	209
R157	1	98	107	157	182	188	189	198	199	202	205	208	215	216	224	226	230	232	233	235	236	238	241	244
R158	95	149	168	183	197	201	203	204	206	207	208	209	210	211	212	213	215	216	217	219	220	221	222	224
R159	1	16	36	98	107	128	158	164	168	186	189	196	208	214	220	221	226	229	233	234	235	242	243	244
R160	1	21	98	107	128	137	142	160	172	182	184	189	192	194	195	199	202	203	205	208	216	217	220	224
R161	1	15	98	105	107	162	163	165	182	189	191	195	197	198	199	200	201	202	203	204	205	206	207	209
R162	1	62	72	92	94	98	105	112	146	160	163	165	173	177	180	182	187	188	189	191	192	193	194	195
R163	1	57	98	107	120	152	159	179	182	183	189	193	198	199	202	203	205	221	223	225	226	229	230	232
R164	1	14	40	69	82	106	107	130	131	148	154	157	158	162	177	182	184	188	197	198	199	200	201	202
R165	23	97	114	127	158	160	166	173	183	192	193	194	195	197	198	201	202	203	204	205	206	207	208	209
R166	1	13	98	102	107	143	175	182	185	186	193	194	196	197	200	201	203	204	206	207	208	209	210	211
R167	1	56	64	89	90	98	100	103	107	113	134	156	157	168	171	173	178	187	188	193	214	216	219	229
R168	12	38	92	123	146	165	168	176	188	191	214	220	223	228	230	231	232	234	240	241	244	249	250	252
R169	1	98	107	136	154	156	182	189	198	199	202	203	205	208	216	224	226	232	233	236	238	239	240	241
R170	1	11	98	107	120	121	163	164	169	179	180	182	186	189	190	195	196	198	199	202	204	205	208	209
R171	2	35	66	101	102	108	123	129	142	165	167	171	175	182	184	185	188	190	193	194	195	197	200	201
R172	1	98	107	124	160	174	182	189	192	194	195	197	199	200	201	203	204	205	206	207	209	210	211	212
R173	34	95	99	143	166	168	175	185	186	193	194	195	196	197	198	199	200	201	202	204	205	206	207	209
R174	1	33	56	89	94	98	103	107	136	143	154	157	162	168	171	173	175	178	182	185	187	189	194	195
R175	1	20	38	85	90	92	98	107	114	117	138	140	150	155	158	161	162	165	168	173	174	176	182	190
R176	203	207	208	216	225	231	233	236	238	247	257	262	263	265	266	270	275	280	281	285	286	287	290	291
R177	43	98	126	171	181	187	188	190	193	198	199	202	205	213	216	222	224	225	229	230	232	233	235	237
R178	1	73	97	98	104	107	127	131	167	175	177	182	183	184	185	189	190	191	193	198	199	200	202	205
R179	18	59	103	109	122	125	146	148	154	157	165	171	172	178	183	185	187	188	193	197	198	199	200	201
R180	28	61	88	162	164	170	171	174	186	187	188	191	192	193	194	195	196	198	201	202	203	204	206	207

Copyright © 2005 IEEE. All rights reserved.
This is an unapproved draft, subject to change

Table 55A–1—P matrix: location 1 to 24

	C1	C2	C3	C4	C5	C6	C7	C8	C9	C10	C11	C12	C13	C14	C15	C16	C17	C18	C19	C20	C21	C22	C23	C24
R181	1	25	51	98	107	110	142	154	157	164	174	175	177	179	182	185	186	188	189	191	193	194	196	197
R182	29	37	70	111	124	135	152	154	155	163	165	169	183	189	199	203	215	216	220	221	223	224	225	226
R183	1	69	86	98	107	129	157	158	161	171	188	190	207	216	217	225	229	231	234	236	238	243	245	247
R184	1	77	96	98	99	107	178	179	182	189	198	199	202	205	208	216	221	223	225	226	229	232	233	236
R185	17	67	97	114	132	152	154	158	169	170	173	174	181	198	200	202	211	213	215	225	226	227	231	232
R186	1	47	62	80	91	92	98	107	117	125	141	146	157	160	161	168	171	177	179	180	182	185	187	190
R187	1	95	98	107	108	120	160	167	168	169	179	182	184	189	190	192	194	195	197	199	200	201	204	206
R188	1	16	98	107	114	128	158	163	173	182	189	195	198	199	202	205	206	207	208	210	211	212	213	215
R189	102	110	157	174	184	188	205	216	220	223	232	234	236	239	241	242	244	245	249	250	253	254	255	256
R190	1	15	41	63	98	102	105	107	113	127	144	146	162	163	164	165	168	176	182	183	186	189	195	196
R191	24	66	94	102	123	152	159	169	173	176	188	190	193	195	203	208	209	214	219	224	229	231	239	241
R192	1	14	35	98	106	107	108	129	160	162	167	171	184	187	190	192	193	194	195	197	198	200	201	202
R193	36	101	158	160	164	175	180	182	185	186	189	192	196	198	202	203	205	217	223	224	226	230	231	232
R194	1	13	21	45	58	71	98	107	122	128	137	145	154	160	167	172	175	184	185	186	190	192	195	196
R195	1	12	39	64	90	98	100	107	123	134	136	146	153	154	155	156	162	164	169	171	176	182	185	186
R196	1	22	98	107	112	121	146	156	163	165	172	180	182	189	195	197	198	199	200	201	202	204	205	206
R197	11	75	120	166	167	169	173	179	184	203	204	208	209	215	216	217	219	223	225	231	233	236	237	242
R198	1	74	98	107	123	158	176	182	189	194	197	200	201	203	204	206	207	209	210	211	212	213	214	216
R199	26	87	93	94	106	109	122	126	147	149	154	159	162	171	172	173	177	181	187	188	191	195	197	198
R200	10	84	93	133	138	141	159	161	163	174	177	179	183	185	189	190	191	193	194	195	203	205	209	214
R201	27	46	139	153	155	157	160	171	182	184	187	188	192	193	194	195	196	197	199	200	201	204	206	207
R202	1	9	54	98	107	138	143	147	174	175	182	185	187	189	194	197	200	201	203	204	205	206	207	209
R203	1	55	96	98	105	107	117	155	163	165	167	175	179	182	184	185	189	190	193	194	197	200	201	203
R204	1	92	98	107	118	134	168	173	177	182	188	191	216	221	223	226	229	232	233	235	238	239	241	243
R205	1	44	50	91	98	121	147	155	163	166	169	171	180	182	187	189	193	195	197	198	199	200	201	202
R206	1	31	68	98	107	125	131	141	160	161	163	177	179	182	185	190	191	192	194	197	198	200	201	202
R207	100	111	128	156	163	174	178	189	205	208	212	216	219	222	223	225	227	228	230	231	232	234	237	239
R208	1	8	98	107	115	135	150	151	154	167	171	176	182	184	187	188	189	190	193	198	199	202	205	208
R209	49	90	93	119	155	159	162	164	165	177	178	186	191	193	196	198	199	200	215	216	221	223	233	234
R210	32	76	91	98	130	154	162	171	177	180	187	191	192	193	194	195	197	198	200	201	202	203	205	206
R211	1	19	98	107	133	161	173	182	183	188	189	190	208	221	229	233	247	248	249	250	251	258	259	261
R212	42	89	108	139	144	146	151	157	165	167	171	182	184	187	188	190	193	198	199	202	205	215	216	221
R213	30	81	88	114	115	127	140	144	155	158	161	162	165	167	168	170	173	183	184	188	189	196	199	208
R214	7	48	118	141	154	161	163	177	179	183	185	190	191	195	214	219	223	224	226	229	230	232	240	241
R215	1	98	107	126	150	171	176	181	182	183	187	189	193	208	213	224	225	226	229	235	236	244	246	247
R216	1	6	98	105	107	119	125	137	155	163	165	172	178	179	182	189	195	197	200	201	204	205	206	207
R217	1	53	65	82	101	106	107	130	160	175	182	189	191	193	194	195	197	200	201	204	206	207	208	209
R218	5	107	208	224	233	235	245	251	253	261	265	266	273	275	280	295	300	307	308	309	310	315	317	318
R219	1	4	83	98	99	107	112	116	138	165	166	167	170	174	182	184	189	190	195	198	199	205	207	209
R220	1	3	98	107	113	127	164	173	182	183	186	189	196	198	201	202	203	204	205	206	207	209	210	211
R221	1	52	98	107	159	162	172	182	189	193	203	216	226	229	230	231	232	233	240	246	248	253	255	261
R222	1	60	78	98	104	107	116	155	158	182	189	194	197	200	201	203	204	206	209	210	211	212	213	214
R223	149	185	200	204	209	214	217	221	231	232	235	239	241	245	247	250	251	252	253	255	259	260	264	265
R224	1	79	98	107	122	129	145	154	167	168	171	175	184	185	187	189	190	194	197	198	199	200	201	202
R225	1	2	23	40	57	72	97	98	105	107	112	127	142	148	159	160	162	163	165	168	182	184	185	187
R226	1	8	30	84	93	98	107	114	127	133	141	144	150	151	158	159	161	168	171	173	176	177	179	182
R227	45	62	90	92	145	146	160	162	164	165	167	168	175	180	184	185	186	188	190	192	195	196	198	202
R228	1	54	98	107	120	147	169	179	182	189	195	198	199	202	205	208	209	213	214	224	226	233	236	239
R229	72	105	112	117	132	154	163	165	168	178	181	195	198	199	203	208	213	214	217	223	227	230	232	233
R230	1	57	89	98	107	159	168	182	183	189	193	198	199	202	203	205	214	221	223	226	227	229	230	231
R231	1	40	88	98	107	148	162	170	182	184	185	188	189	197	198	199	200	201	202	203	204	205	206	209
R232	1	7	23	97	98	107	115	118	127	134	160	163	167	173	177	182	184	190	191	192	194	197	198	199
R233	1	44	64	90	98	100	134	155	156	162	164	166	173	182	186	196	197	198	199	201	202	204	205	206
R234	31	41	102	127	131	141	146	161	165	177	179	185	189	190	191	205	208	217	220	222	225	231	232	233
R235	1	6	24	53	98	101	105	107	125	152	153	155	159	160	163	169	171	175	179	182	185	187	189	190
R236	5	148	152	162	167	169	184	185	190	197	200	201	203	204	206	208	209	211	213	214	215	216	217	218
R237	1	4	61	69	98	116	131	157	158	162	165	167	174	177	182	184	188	189	190	191	197	198	199	200
R238	1	3	78	87	98	106	107	149	155	162	166	173	182	189	197	198	199	202	203	205	213	220	221	222
R239	1	29	83	98	99	107	138	166	174	182	183	195	198	199	202	203	204	217	221	231	232	233	240	241
R240	122	138	154	174	180	205	209	214	220	221	224	234	236	242	243	245	246	251	253	257	261	262	263	264

Copyright © 2005 IEEE. All rights reserved.
This is an unapproved draft, subject to change

Table 55A–1—P matrix: location 1 to 24

	C1	C2	C3	C4	C5	C6	C7	C8	C9	C10	C11	C12	C13	C14	C15	C16	C17	C18	C19	C20	C21	C22	C23	C24
R241	1	46	52	71	98	107	122	137	139	153	154	155	157	160	162	171	187	188	189	192	193	194	195	198
R242	1	98	107	116	142	167	182	184	189	190	198	199	202	205	207	208	215	216	226	229	232	233	234	236
R243	22	80	91	112	117	125	141	146	161	171	179	185	189	190	197	198	199	200	201	204	206	207	209	210
R244	99	111	123	163	166	174	175	176	185	193	194	197	198	199	200	201	202	204	206	207	209	210	211	212
R245	1	98	107	109	163	172	179	182	189	195	197	198	199	200	201	202	203	204	205	206	207	209	210	211
R246	1	50	70	98	107	110	111	121	124	147	157	174	180	182	188	189	198	199	202	203	213	216	220	224
R247	1	51	100	107	110	154	156	157	174	177	182	188	191	205	206	207	210	211	212	213	215	216	218	220
R248	37	82	97	98	130	135	136	154	155	162	185	191	195	197	199	201	203	204	206	207	209	210	211	212
R249	1	18	63	85	90	98	107	113	114	121	122	125	140	154	155	158	161	162	163	173	180	182	190	195
R250	113	145	164	167	175	184	185	186	190	193	194	196	197	198	199	200	201	202	203	204	205	206	207	208
R251	1	98	103	107	157	160	162	170	171	178	182	187	188	189	192	193	194	195	199	203	215	217	223	224
R252	1	43	96	98	107	126	127	167	171	177	179	181	182	183	184	186	187	188	189	190	191	193	195	196
R253	17	104	114	158	159	167	170	173	184	190	193	194	197	198	200	201	202	204	205	206	207	209	210	211
R254	1	98	105	107	114	158	163	173	182	189	195	198	199	202	205	208	216	221	223	229	233	234	238	240
R255	49	67	93	97	102	119	132	152	154	155	157	159	165	169	177	178	181	188	191	193	197	198	199	201
R256	81	95	115	143	165	167	168	175	184	185	190	193	194	197	198	200	201	202	203	204	205	206	207	208
R257	1	16	19	56	89	98	103	107	128	141	157	161	162	168	171	173	178	179	182	185	187	189	190	193
R258	1	38	73	92	98	107	126	127	168	171	175	181	182	183	184	185	187	189	191	194	197	198	199	200
R259	1	15	59	75	98	105	107	109	146	162	163	165	166	172	182	183	189	195	198	199	202	205	208	214
R260	68	94	160	163	173	192	194	195	196	197	198	200	202	203	205	208	215	216	220	221	223	224	226	228
R261	25	128	164	175	181	185	186	193	196	198	199	202	205	216	220	230	232	233	234	236	238	241	243	246
R262	14	26	55	94	96	106	122	126	154	162	167	171	173	179	181	184	187	188	189	190	193	197	198	199
R263	118	135	147	154	177	189	191	193	199	208	213	214	215	216	221	226	228	230	232	234	235	238	239	241
R264	1	13	98	107	149	182	186	196	198	199	200	202	205	215	228	229	233	234	236	239	240	243	245	246
R265	1	32	91	98	107	168	171	180	182	187	189	190	193	197	198	199	200	201	202	203	205	206	207	210
R266	1	12	27	98	107	123	131	146	150	165	177	182	184	188	189	191	198	199	202	205	220	221	222	226
R267	1	65	98	107	154	156	182	189	198	199	202	205	208	216	224	226	232	233	235	236	238	240	241	244
R268	1	11	28	88	98	107	119	120	144	155	164	165	168	169	170	178	179	182	186	188	189	190	191	192
R269	106	112	162	174	197	200	201	202	204	206	207	209	210	211	212	214	219	220	222	224	225	227	229	230
R270	93	159	177	188	191	193	197	200	201	204	206	207	209	210	211	212	213	214	219	220	222	223	224	225
R271	20	47	58	86	117	125	131	138	150	161	165	174	176	188	189	190	195	205	209	213	221	222	224	226
R272	1	10	60	77	98	99	104	107	108	160	163	166	167	178	182	184	189	190	192	194	195	197	199	200
R273	1	9	98	107	130	138	143	151	154	162	171	174	175	182	185	189	193	194	205	208	209	214	221	224
R274	36	48	79	92	129	154	158	164	168	171	186	187	188	193	196	207	214	219	220	221	224	226	229	230
R275	1	21	91	98	107	128	160	164	171	176	182	186	187	189	192	193	194	195	196	199	202	203	205	220
R276	1	66	98	102	107	123	124	174	176	182	188	189	198	199	202	203	216	226	229	230	232	233	238	241
R277	1	34	76	95	107	168	177	182	189	191	198	199	202	205	208	212	214	215	216	221	223	226	227	228
R278	1	33	35	94	98	107	108	129	133	136	143	146	160	165	167	171	173	175	183	184	185	187	189	190
R279	1	42	98	101	107	108	144	167	168	175	182	184	185	189	190	193	194	195	197	200	201	203	204	206
R280	2	139	142	157	160	162	165	182	187	188	193	197	198	199	200	201	202	204	205	206	207	209	210	211
R281	1	12	47	63	81	98	107	113	115	123	125	142	146	164	167	176	177	182	184	186	189	190	191	195
R282	1	98	107	108	141	156	160	161	165	167	179	182	184	185	192	194	195	197	199	200	201	204	206	207
R283	1	11	98	107	120	126	147	169	171	179	181	182	188	189	190	192	194	195	197	198	200	201	202	203
R284	139	149	157	160	182	188	192	194	195	197	199	201	202	204	205	206	207	209	210	211	212	213	214	215
R285	27	75	80	91	93	117	141	159	161	162	165	166	168	171	177	179	184	185	187	189	190	191	197	200
R286	26	94	110	122	126	154	157	171	173	174	181	187	193	195	198	199	202	216	218	220	221	226	230	232
R287	1	9	43	98	107	126	138	143	171	174	175	181	182	185	188	189	193	194	198	199	202	208	209	213
R288	1	36	98	104	107	130	154	155	158	162	164	167	170	183	184	186	189	190	194	196	198	199	202	205
R289	1	21	92	98	107	127	128	160	161	168	182	183	188	190	192	194	195	197	199	200	201	202	204	205
R290	1	78	91	98	107	137	155	159	171	172	182	187	189	198	199	202	203	205	208	216	225	226	228	229
R291	146	158	165	204	209	210	212	214	218	220	222	223	224	227	228	229	230	231	232	236	238	239	240	241
R292	67	97	107	122	132	152	169	176	181	198	199	200	202	205	212	215	219	226	228	229	233	234	236	239
R293	1	66	85	90	98	102	107	114	123	140	154	155	158	161	162	164	173	176	182	186	188	190	196	221
R294	1	8	35	98	107	108	129	148	150	151	160	162	167	176	184	185	188	189	190	192	194	195	196	198
R295	61	90	101	160	164	174	175	177	185	186	191	192	193	196	198	202	203	208	216	223	224	232	233	235
R296	1	55	96	98	103	107	157	162	167	171	173	178	179	182	184	187	188	189	190	193	195	197	198	199
R297	29	118	177	183	191	214	221	235	239	245	251	252	260	267	268	269	271	279	280	281	285	286	287	290
R298	68	89	114	123	152	158	160	163	168	169	173	176	192	194	197	198	200	201	202	204	205	206	207	209
R299	1	69	88	98	102	107	109	128	131	153	155	157	158	170	171	172	177	182	187	189	191	193	197	198
R300	7	118	163	166	172	177	183	189	191	195	197	200	201	204	206	207	208	209	210	211	212	213	216	217

Copyright © 2005 IEEE. All rights reserved.
This is an unapproved draft, subject to change

Table 55A–1—P matrix: location 1 to 24

	C1	C2	C3	C4	C5	C6	C7	C8	C9	C10	C11	C12	C13	C14	C15	C16	C17	C18	C19	C20	C21	C22	C23	C24
R301	1	6	50	98	105	107	121	125	147	160	179	180	182	189	192	194	195	197	198	200	201	202	204	205
R302	5	100	156	189	191	208	216	219	222	224	225	229	231	233	235	236	237	238	239	242	244	245	247	248
R303	4	41	62	79	92	102	116	127	129	160	165	167	168	171	180	182	183	184	187	188	190	192	193	194
R304	3	24	120	134	152	159	179	190	193	198	199	201	202	204	205	206	207	209	210	211	212	213	214	215
R305	1	44	98	124	143	155	166	174	175	182	185	189	193	194	197	200	201	203	204	205	206	207	209	210
R306	31	34	56	89	95	103	131	141	157	161	162	169	171	177	178	179	185	187	188	189	190	191	193	197
R307	1	33	38	74	92	94	98	107	125	136	143	154	158	168	173	175	182	185	188	189	191	193	194	195
R308	83	99	111	138	150	163	166	176	188	208	209	214	216	217	220	223	229	231	232	235	238	241	246	247
R309	52	72	105	112	119	155	162	163	165	168	172	178	195	202	205	214	217	223	230	232	233	235	236	238
R310	1	57	98	99	106	107	116	159	162	166	167	182	183	184	189	190	193	195	197	200	201	203	204	206
R311	40	60	104	148	162	167	190	194	198	199	202	207	211	213	216	221	224	227	229	231	234	235	239	245
R312	1	23	53	97	98	101	107	127	175	181	182	183	185	189	192	193	199	200	208	216	218	219	220	223
R313	207	208	216	238	245	246	257	262	263	270	273	277	300	307	318	319	320	322	324					
R314	73	98	127	135	154	175	183	185	193	194	197	198	200	201	202	203	204	205	206	207	208	209	210	211
R315	1	59	97	98	105	107	109	146	163	165	172	182	183	189	190	195	197	198	199	201	202	203	204	205
R316	18	32	91	122	125	131	154	171	177	180	187	191	193	197	198	199	200	202	204	208	209	215	217	220
R317	25	49	93	119	155	159	164	165	175	177	178	185	186	191	194	196	198	199	214	216	223	233	234	235
R318	28	64	86	88	90	100	131	134	156	161	162	170	173	177	188	189	190	192	194	195	198	202	205	208
R319	19	45	77	99	145	151	166	171	173	175	178	185	187	188	189	193	194	195	198	199	202	203	205	216
R320	140	155	161	179	189	190	197	200	201	203	204	206	207	209	210	212	214	215	220	222	223	225	226	227
R321	1	48	70	96	98	107	111	124	154	163	167	179	182	184	189	190	198	199	202	203	205	215	219	220
R322	1	17	98	107	114	129	158	170	171	173	180	187	189	193	195	199	207	208	215	216	221	225	229	232
R323	1	71	82	107	122	130	132	137	154	162	172	181	182	185	189	191	216	222	224	227	230	232	233	235
R324	39	76	87	98	106	149	157	162	165	169	173	177	185	188	191	197	201	203	204	206	207	208	209	210
R325	1	22	95	98	107	112	113	133	146	164	165	168	182	183	186	189	196	202	203	205	214	216	217	223
R326	16	42	65	108	128	138	144	154	160	167	168	174	182	184	190	192	194	195	197	199	200	201	204	205
R327	1	30	46	98	107	114	127	139	144	153	155	157	158	160	168	171	173	183	184	187	188	189	192	193
R328	1	15	98	105	107	112	136	154	162	163	178	182	189	195	197	198	199	200	201	204	206	207	209	210
R329	1	58	84	93	94	98	107	121	133	141	159	161	163	173	177	179	180	182	183	185	190	191	193	197
R330	14	54	106	115	147	162	167	171	184	187	189	190	193	197	199	200	201	203	204	206	207	210	211	212
R331	51	110	117	144	154	157	165	168	177	188	191	193	198	199	200	202	205	213	214	215	216	217	230	231
R332	13	37	135	154	155	186	189	195	196	199	206	207	208	210	211	212	213	218	219	220	221	222	223	225
R333	2	20	117	138	142	150	174	176	187	193	205	209	213	214	216	217	221	224	226	230	231	235	236	238
R334	1	10	98	107	113	163	164	169	182	186	189	194	195	196	197	200	201	203	204	206	207	209	210	211
R335	1	9	98	107	108	111	132	138	143	154	160	163	167	175	181	182	184	185	187	189	190	192	199	203
R336	51	92	110	114	154	157	158	168	172	173	174	177	191	197	198	199	200	201	202	203	204	206	207	208
R337	37	91	102	135	154	155	167	171	184	187	190	193	195	197	199	200	201	203	204	206	207	208	209	210
R338	72	84	93	105	112	133	141	159	161	163	168	177	179	183	185	189	190	191	193	195	197	198	199	200
R339	1	57	98	107	159	173	182	183	189	193	198	199	202	203	205	212	221	222	223	227	228	229	230	231
R340	1	40	54	98	105	107	147	148	152	154	162	163	169	182	184	185	189	195	197	198	199	200	201	202
R341	1	23	69	97	98	107	117	123	127	131	157	158	160	165	176	177	182	183	188	189	191	192	194	195
R342	8	109	144	150	151	166	168	171	172	176	187	188	193	197	200	201	204	206	207	209	210	211	212	213
R343	1	76	90	107	162	164	177	182	186	189	191	196	197	200	201	203	204	206	207	209	210	211	212	213
R344	133	176	183	198	199	202	205	216	230	232	234	236	238	241	243	249	252	254	258	260	261	263	267	270
R345	1	42	66	98	102	107	108	123	130	144	154	160	162	167	168	176	182	184	188	189	190	192	194	195
R346	1	30	85	89	90	98	107	127	140	144	155	162	164	182	183	186	189	208	214	217	221	223	226	229
R347	35	88	108	129	160	167	170	171	182	183	184	187	188	190	192	193	194	195	197	199	200	201	204	206
R348	1	7	98	101	107	118	160	163	175	177	183	185	188	191	192	193	195	199	203	208	214	216	221	223
R349	1	20	81	98	107	115	117	137	138	150	167	172	174	176	182	184	188	189	190	197	198	200	201	202
R350	1	98	103	107	136	141	154	157	161	162	171	178	179	182	185	187	188	190	193	197	198	199	200	201
R351	6	105	107	121	125	126	171	179	180	181	187	188	193	208	213	214	222	223	224	229	230	233	234	237
R352	1	5	41	98	102	107	127	146	147	164	165	182	183	186	189	196	198	199	202	205	208	213	216	217
R353	4	24	116	152	159	165	167	169	179	184	193	203	207	208	215	216	231	232	234	239	244	245	247	250
R354	3	70	111	124	163	173	189	195	201	204	206	207	208	209	210	211	212	213	214	215	216	219	220	221
R355	1	27	45	74	98	107	129	145	158	167	171	175	185	187	189	190	193	194	198	199	202	205	207	215
R356	1	98	107	143	175	182	185	189	193	194	197	200	201	203	204	209	214	215	216	217	218	221	223	224
R357	1	43	56	86	89	98	103	107	126	131	157	161	162	168	177	178	181	182	190	191	197	200	201	203
R358	38	63	77	92	99	104	113	164	166	168	178	186	188	191	194	195	196	197	198	199	200	201	202	204
R359	1	98	107	146	165	182	189	198	199	202	203	205	209	211	213	214	215	217	219	221	224	225	231	232
R360	1	98	99	107	149	166	182	189	195	198	199	200	202	203	205	215	226	229	233	236	240	243	244	245

Copyright © 2005 IEEE. All rights reserved.
This is an unapproved draft, subject to change

Table 55A–1—P matrix: location 1 to 24

	C1	C2	C3	C4	C5	C6	C7	C8	C9	C10	C11	C12	C13	C14	C15	C16	C17	C18	C19	C20	C21	C22	C23	C24
R361	65	154	168	214	221	224	229	244	248	254	258	264	265	267	268	269	270	271	272	273	274	276	277	278
R362	78	151	155	171	187	193	225	228	233	234	236	243	245	246	251	259	263	264	281	284	285	291	295	301
R363	1	98	107	112	140	155	161	182	190	197	198	199	200	201	206	210	211	212	213	217	219	220	221	222
R364	48	64	90	98	100	122	134	156	162	164	173	186	189	196	197	199	200	201	203	204	206	207	209	210
R365	1	97	98	107	142	182	189	198	199	200	202	205	208	215	216	217	219	225	229	230	231	238	246	248
R366	18	122	125	154	165	198	199	202	208	214	217	224	229	231	232	239	240	241	247	253	254	260	261	263
R367	1	58	98	107	182	187	189	193	198	199	202	205	208	213	214	216	218	220	221	226	229	230	232	233
R368	1	73	83	98	99	107	127	134	138	166	173	174	175	182	183	185	189	193	194	195	197	198	199	200
R369	1	44	59	98	109	146	155	165	166	172	181	182	183	189	197	200	201	204	206	207	208	209	210	211
R370	1	31	52	79	98	107	129	131	141	161	162	171	172	177	179	185	187	190	191	193	201	203	204	206
R371	25	96	116	135	154	164	175	179	185	186	193	194	195	196	197	198	200	201	202	203	204	205	206	208
R372	1	17	87	98	106	107	114	124	149	158	162	170	173	174	182	185	189	197	198	201	202	204	206	207
R373	32	34	91	95	168	171	180	187	193	202	204	205	209	217	223	225	230	231	232	233	234	239	240	241
R374	1	33	36	75	94	98	107	136	138	143	154	158	164	166	173	174	175	185	186	189	193	194	195	197
R375	21	46	128	139	153	155	171	180	182	187	193	198	199	216	220	225	230	232	234	236	238	241	243	245
R376	1	55	71	95	96	98	107	122	137	154	167	168	172	179	182	184	189	190	194	195	205	214	215	216
R377	1	16	26	94	98	107	118	122	126	128	154	171	173	177	181	182	187	188	191	193	195	205	213	214
R378	1	39	53	98	101	107	145	160	165	167	169	173	182	185	189	190	195	198	199	202	203	205	215	223
R379	1	15	22	98	105	107	112	146	162	163	165	182	189	192	194	199	202	203	205	208	216	221	223	226
R380	49	93	94	119	155	159	160	165	173	177	178	191	192	193	194	198	203	208	216	224	226	230	233	234
R381	67	97	132	139	152	154	157	160	169	181	182	186	188	192	194	195	196	197	198	201	202	204	205	206
R382	1	14	19	98	106	107	170	173	182	188	189	198	199	202	205	208	213	215	216	221	223	224	233	235
R383	80	91	117	127	141	148	161	162	165	171	179	183	187	189	190	207	208	213	216	219	223	224	226	229
R384	1	13	61	98	107	159	162	174	182	186	193	196	197	198	199	200	201	202	204	206	207	209	210	211
R385	150	158	163	176	188	195	222	223	230	232	234	237	239	240	241	242	249	253	254	256	257	258	260	261
R386	12	29	110	123	146	157	165	174	175	176	183	185	188	189	190	193	194	197	198	199	200	201	202	203
R387	1	98	107	119	131	155	156	165	177	178	182	189	191	198	199	202	203	205	221	222	223	226	229	236
R388	1	11	50	98	106	107	120	121	147	162	163	169	178	179	180	182	189	190	191	195	197	198	199	200
R389	28	62	88	92	146	160	164	165	168	170	180	186	191	196	203	208	214	215	216	217	223	224	227	229
R390	1	82	100	107	120	130	154	156	162	169	179	182	185	191	197	200	201	203	204	206	207	208	209	210
R391	60	93	104	115	159	174	177	191	193	194	198	202	203	208	216	223	227	231	232	240	242	243	244	246
R392	6	21	105	109	125	128	160	163	172	179	192	194	199	202	203	205	214	216	220	224	225	230	231	233
R393	140	155	161	168	174	185	189	190	197	200	201	203	204	205	206	207	208	209	210	211	213	216	217	219
R394	8	47	125	150	151	171	176	177	187	188	190	191	193	195	197	198	199	200	201	202	203	204	205	206
R395	1	36	90	98	107	108	131	158	160	162	167	171	177	184	187	189	190	191	192	193	194	195	199	203
R396	21	51	80	91	110	117	128	141	154	157	160	161	165	171	174	177	179	185	187	188	189	190	191	192
R397	28	37	88	134	135	154	155	164	170	173	186	188	191	192	194	196	197	200	201	203	204	206	207	208
R398	1	44	74	89	98	155	158	163	166	168	182	189	195	198	199	202	203	205	214	216	221	222	223	226
R399	31	86	88	110	141	157	170	174	179	185	195	205	215	221	223	225	230	233	234	240	242	244	246	250
R400	7	77	99	118	132	154	163	166	167	177	178	181	183	184	189	190	191	198	199	203	214	215	216	221
R401	1	75	79	98	107	129	166	171	187	189	193	203	207	211	213	214	215	216	220	224	225	226	229	232
R402	1	6	98	105	107	124	125	163	169	174	179	182	189	194	195	197	198	199	200	201	202	204	206	207
R403	1	26	34	94	95	98	107	122	125	126	154	168	171	173	181	182	187	188	189	193	195	198	199	202
R404	5	33	94	111	136	143	154	163	173	174	175	177	185	191	193	194	197	198	199	200	201	202	203	204
R405	1	4	43	63	98	107	113	116	126	164	165	167	171	175	181	182	184	185	186	187	188	189	190	194
R406	3	104	167	173	184	190	194	197	198	199	200	202	205	209	214	216	220	226	228	230	234	235	236	241
R407	1	50	98	107	114	121	147	158	163	173	180	182	189	195	198	199	202	205	208	213	221	224	226	229
R408	1	68	98	100	107	156	160	163	164	182	186	188	192	194	196	197	199	200	201	204	206	207	209	210
R409	20	117	128	138	147	150	165	174	176	183	188	205	209	214	216	217	220	223	229	232	236	238	239	241
R410	137	172	197	198	199	200	201	202	203	204	205	206	207	209	210	211	212	213	214	216	219	220	222	223
R411	1	27	60	72	98	99	104	105	107	112	163	166	167	168	182	189	190	194	197	200	201	202	203	204
R412	57	78	107	155	159	183	193	203	208	215	222	223	228	229	230	232	233	234	237	240	242	245	248	249
R413	1	40	65	84	93	98	107	133	141	148	154	159	161	162	177	179	182	183	184	190	191	193	203	204
R414	23	97	122	127	154	160	183	192	194	195	197	198	201	202	204	205	206	209	210	211	212	213	214	215
R415	1	54	107	112	147	182	189	198	199	203	209	213	214	216	217	221	222	224	226	230	231	233	237	238
R416	49	93	97	117	119	148	155	159	162	177	178	185	191	193	199	200	202	205	207	213	215	216	223	224
R417	18	61	73	122	125	127	154	162	174	175	183	185	193	194	208	214	216	221	224	226	229	232	234	241
R418	1	19	59	98	107	109	146	165	172	173	182	183	188	197	198	199	200	201	202	203	204	205	206	207
R419	1	29	98	107	130	153	154	155	162	171	182	183	187	193	197	198	199	200	202	205	215	217	220	224
R420	1	25	58	98	107	161	164	172	175	182	185	186	190	193	194	196	213	216	224	230	231	233	234	235

Copyright © 2005 IEEE. All rights reserved.
This is an unapproved draft, subject to change

Table 55A–1—P matrix: location 1 to 24

	C1	C2	C3	C4	C5	C6	C7	C8	C9	C10	C11	C12	C13	C14	C15	C16	C17	C18	C19	C20	C21	C22	C23	C24
R421	1	67	81	97	98	107	115	132	152	154	165	169	181	182	189	199	200	208	215	216	217	219	221	224
R422	1	96	98	107	141	152	161	167	169	182	184	185	195	198	199	202	205	215	221	225	229	232	238	239
R423	1	17	69	98	107	114	126	131	157	170	171	173	177	178	181	182	187	189	191	193	199	208	213	215
R424	166	182	198	199	202	203	205	208	227	231	232	236	238	240	241	244	246	247	249	250	253	254	255	256
R425	1	98	107	115	136	154	157	167	170	182	184	188	189	190	192	194	195	197	200	201	203	204	206	207
R426	1	95	98	107	121	127	163	168	180	182	183	189	195	198	199	200	202	205	208	214	215	216	221	230
R427	16	82	98	128	130	139	154	157	159	160	162	182	185	188	191	192	193	194	195	199	216	220	222	226
R428	1	98	107	158	162	182	184	189	197	198	199	200	201	202	203	204	205	206	207	209	210	211	212	213
R429	1	15	64	90	98	100	105	107	134	156	163	164	173	180	182	186	195	196	198	199	202	205	217	219
R430	71	94	105	113	122	137	154	163	164	172	173	181	186	196	197	198	199	200	201	202	203	204	205	206
R431	196	245	265	266	267	268	269	271	273	277	279	297	300	301	303	307	310	312	315	318	320	323	325	
R432	14	39	106	135	154	162	165	169	173	185	189	197	199	200	201	203	204	206	207	209	210	211	212	214
R433	1	22	55	96	98	107	112	142	146	165	167	176	179	182	184	189	190	193	195	198	199	203	205	215
R434	1	13	32	66	91	98	102	107	118	123	165	171	176	177	180	182	186	187	188	189	191	193	196	197
R435	187	191	193	245	252	259	260	264	267	268	269	271	275	279	280	281	285	289	290	291	293	297	301	306
R436	1	12	35	62	92	98	107	108	123	129	144	167	171	176	179	180	184	187	188	189	190	193	207	208
R437	70	101	111	120	124	156	160	163	169	175	179	185	192	193	195	199	216	220	221	229	238	239	240	244
R438	11	87	106	120	129	149	150	162	169	171	176	179	182	187	188	190	193	197	198	199	201	202	203	205
R439	119	138	146	155	174	178	203	205	208	209	214	216	217	221	229	230	231	233	235	236	238	242	248	249
R440	1	46	93	98	106	107	139	145	153	155	157	159	160	162	167	171	173	175	177	184	185	187	188	189
R441	10	85	90	114	123	140	155	158	160	161	162	163	164	173	176	186	189	190	192	196	198	202	203	205
R442	109	172	186	196	197	200	201	203	204	206	207	208	209	210	211	212	214	216	217	219	220	222	223	225
R443	9	41	102	127	138	143	146	165	174	175	183	185	187	194	197	198	199	200	201	202	203	204	206	207
R444	24	76	83	98	99	138	152	155	159	166	169	174	177	189	190	191	193	195	205	209	214	215	222	223
R445	45	92	103	133	145	157	162	167	168	171	175	178	183	184	185	187	190	193	194	197	200	201	203	204
R446	1	42	52	91	98	107	108	144	160	162	167	168	171	172	182	184	187	189	190	192	193	194	195	199
R447	30	53	101	114	116	127	144	149	151	158	160	167	168	171	173	175	183	184	185	187	190	194	195	196
R448	2	38	56	89	92	103	142	143	157	162	165	171	175	178	185	191	193	194	198	199	202	203	205	208
R449	50	121	147	152	163	169	180	195	200	213	215	216	223	224	225	233	234	235	236	238	239	240	248	251
R450	1	69	83	93	98	99	107	131	138	157	158	159	166	174	182	188	189	193	195	197	198	199	200	201
R451	1	43	98	100	107	126	156	166	171	181	182	187	188	193	203	208	213	219	224	226	230	233	235	240
R452	10	52	104	149	162	163	167	172	182	184	190	195	198	199	200	202	205	216	219	225	226	230	231	232
R453	116	167	168	184	190	207	213	214	215	221	224	229	230	234	238	239	240	245	251	254	265	267	268	269
R454	9	73	127	136	138	143	154	174	183	185	187	193	205	208	209	214	216	221	223	224	226	232	236	238
R455	1	59	98	107	109	121	144	146	155	163	165	168	172	173	180	182	183	189	195	197	198	199	200	201
R456	1	92	98	107	168	182	188	189	198	199	201	202	203	204	205	206	207	209	210	211	212	213	215	217
R457	25	91	123	143	164	171	176	186	187	193	196	197	200	201	203	204	206	207	208	209	210	211	212	213
R458	56	89	103	109	157	162	168	171	172	178	187	188	193	214	221	223	225	230	231	232	235	236	238	240
R459	1	38	92	98	107	150	153	155	168	171	176	182	187	189	191	193	198	199	202	205	208	212	214	216
R460	41	82	98	102	127	130	146	162	165	172	183	185	191	203	208	217	220	221	222	223	230	237	238	239
R461	24	119	152	155	159	165	167	169	178	184	193	215	221	223	225	230	232	236	238	239	240	245	246	249
R462	1	8	98	106	107	150	151	162	176	182	188	189	197	198	199	200	201	202	203	204	205	206	207	209
R463	1	51	90	98	107	110	113	154	157	162	174	177	182	188	189	190	191	197	198	199	200	201	202	203
R464	1	37	64	90	98	100	107	131	134	135	154	155	156	162	164	173	177	182	183	186	191	195	196	197
R465	1	28	65	88	89	98	107	137	154	164	168	170	172	182	186	188	189	191	192	194	195	196	199	202
R466	75	88	166	170	176	188	203	208	210	212	214	215	216	218	219	220	221	222	224	225	226	227	228	229
R467	7	66	102	107	112	118	123	163	176	177	183	188	189	191	195	202	203	205	214	217	221	222	226	228
R468	26	35	94	108	122	126	129	132	160	167	173	182	184	188	190	192	194	197	199	200	201	204	206	209
R469	1	6	72	98	101	107	112	125	139	157	168	175	179	185	188	189	193	194	195	197	200	201	202	204
R470	57	146	159	162	165	181	183	193	197	198	199	200	201	202	204	205	206	207	209	210	211	212	213	214
R471	5	40	148	162	184	185	197	200	201	203	204	206	208	209	210	212	214	215	216	217	219	220	221	223
R472	4	23	87	97	106	116	127	135	149	154	160	162	165	167	183	184	190	192	194	195	198	199	202	203
R473	3	58	173	201	203	204	206	207	208	209	210	211	212	214	215	216	217	219	221	222	225	227	228	233
R474	32	78	91	138	155	171	174	180	187	193	197	200	201	203	205	206	207	208	209	210	211	212	213	214
R475	1	46	98	107	139	153	155	157	160	171	187	188	189	192	193	194	195	197	199	200	201	206	207	208
R476	60	104	122	154	167	184	190	194	197	198	199	200	201	202	203	204	205	206	207	208	209	210	211	212
R477	1	67	80	91	97	98	107	117	132	141	152	154	161	165	169	171	179	181	182	185	187	190	193	197
R478	1	98	99	107	110	157	164	166	169	174	182	186	188	189	195	196	198	199	202	203	223	225	226	229
R479	125	198	199	202	205	208	214	221	226	231	232	235	236	237	239	240	241	242	244	245	246	247	251	253
R480	1	74	98	107	111	158	163	174	182	189	195	198	199	202	208	220	226	229	232	233	234	235	240	241

Copyright © 2005 IEEE. All rights reserved.
This is an unapproved draft, subject to change

Table 55A–1—P matrix: location 1 to 24

	C1	C2	C3	C4	C5	C6	C7	C8	C9	C10	C11	C12	C13	C14	C15	C16	C17	C18	C19	C20	C21	C22	C23	C24
R481	1	98	107	182	188	189	191	198	199	202	205	207	208	216	226	229	232	233	236	238	239	240	241	244
R482	1	20	62	92	107	117	138	146	150	160	168	174	176	180	182	189	192	194	195	196	197	199	200	201
R483	97	120	130	154	162	169	179	197	201	203	204	206	207	208	209	210	211	212	213	214	215	216	217	220
R484	1	18	55	96	98	107	122	125	154	161	167	179	182	184	195	208	214	215	224	225	231	232	235	236
R485	1	45	49	93	98	107	119	145	155	159	165	167	174	175	177	178	182	184	185	189	190	191	193	194
R486	1	19	98	107	114	147	158	180	182	188	198	199	202	205	213	216	217	223	224	231	233	235	236	238
R487	47	71	96	102	122	125	137	154	167	172	177	179	184	190	191	197	198	199	200	201	202	203	204	205
R488	17	108	114	145	158	160	170	173	175	179	185	192	193	195	203	208	215	216	217	223	224	225	226	229
R489	1	27	39	70	85	90	98	107	111	114	124	140	155	158	161	162	163	164	165	169	182	184	185	186
R490	1	22	98	107	112	129	146	160	165	171	187	189	192	193	194	195	197	198	200	201	203	204	206	209
R491	79	129	142	157	171	182	186	187	188	193	196	198	199	202	205	207	216	217	220	225	231	233	238	240
R492	95	165	168	214	235	245	251	257	260	261	262	263	264	267	268	269	271	273	277	286	288	289	290	294
R493	1	16	68	98	103	107	124	128	157	160	162	163	171	174	178	182	188	189	192	194	199	205	208	216
R494	34	95	128	168	184	214	220	221	235	238	244	245	247	248	250	251	254	259	267	268	269	270	271	273
R495	15	33	81	94	105	115	136	143	154	162	163	165	167	173	175	184	185	190	193	194	197	198	200	201
R496	36	94	134	141	158	161	164	179	182	185	186	189	190	195	196	206	207	208	210	211	212	213	215	216
R497	1	21	44	98	126	128	155	160	166	171	181	182	187	188	189	192	193	194	195	197	198	200	201	203
R498	14	31	63	106	113	131	141	148	161	164	177	179	186	190	191	196	207	213	214	217	219	222	224	226
R499	1	61	86	98	107	131	161	162	170	174	177	182	190	191	193	197	198	199	200	201	202	203	204	206
R500	1	13	77	84	93	98	99	107	127	133	141	159	161	166	167	177	178	179	182	184	185	186	189	191
R501	29	159	183	189	193	203	211	213	215	219	221	223	224	225	229	230	232	233	234	235	236	240	246	247
R502	1	12	54	76	107	123	146	147	158	165	176	177	178	182	189	191	198	199	202	205	208	209	213	214
R503	117	133	151	156	165	171	183	187	193	198	199	202	205	213	216	221	223	224	225	227	229	230	231	233
R504	11	42	108	120	140	144	155	160	161	167	168	169	175	179	184	185	189	190	192	193	195	197	199	200
R505	30	48	114	115	127	144	154	158	167	168	173	183	184	190	196	199	215	216	217	219	221	224	225	226
R506	2	53	101	142	160	165	175	185	187	194	195	197	198	199	200	201	202	204	206	207	208	209	210	211
R507	1	88	98	107	112	137	148	162	170	172	182	185	188	189	198	199	203	207	208	215	216	217	219	225
R508	1	7	61	98	107	118	162	163	174	177	182	183	191	195	196	197	198	200	201	202	203	204	206	207
R509	1	29	55	96	98	107	146	165	167	178	179	182	183	184	188	190	195	198	199	202	215	217	225	229
R510	1	6	20	98	105	107	117	118	125	138	150	163	165	174	176	177	179	182	188	191	192	194	197	198
R511	5	115	139	157	160	167	182	184	188	190	192	194	195	197	200	201	204	206	207	209	210	211	212	213
R512	4	116	134	162	165	167	173	184	190	191	197	198	199	201	202	203	204	205	206	208	209	210	211	212
R513	1	3	44	62	86	92	98	131	146	149	155	160	161	165	166	168	173	177	180	182	188	190	191	192
R514	1	31	77	98	99	107	120	131	141	161	166	167	168	169	177	178	180	182	184	185	191	195	198	199
R515	1	71	83	98	99	107	122	137	138	154	166	172	174	182	189	195	197	198	199	200	201	202	204	206
R516	39	52	162	165	169	172	173	185	217	223	225	226	230	233	234	236	237	238	240	242	244	250	251	254
R517	1	22	74	81	98	107	112	115	116	130	146	154	158	162	182	189	197	198	200	201	204	206	208	209
R518	70	99	111	124	126	163	166	171	176	181	187	188	193	198	199	202	205	213	216	220	223	224	225	229
R519	66	80	91	102	117	123	129	141	161	165	176	179	182	185	188	189	190	197	198	199	200	201	202	203
R520	35	108	129	160	163	167	171	182	184	187	190	192	193	194	197	199	200	201	204	206	207	209	210	211
R521	1	58	67	97	101	107	110	132	152	154	157	160	169	174	175	181	182	185	188	189	192	193	199	200
R522	97	151	171	187	193	195	200	215	219	226	232	239	245	253	257	258	262	267	270	272	273	274	275	276
R523	1	18	98	107	122	125	132	140	155	161	181	182	190	197	198	199	200	201	202	203	204	206	207	209
R524	1	48	84	93	98	107	133	141	147	154	159	161	177	179	182	183	185	190	191	193	197	200	201	204
R525	54	143	147	175	185	193	194	197	198	199	200	201	202	203	204	205	206	207	208	210	211	212	216	219
R526	1	27	56	89	98	103	107	117	157	162	165	168	171	178	182	184	187	188	189	193	197	198	199	200
R527	38	49	92	93	96	119	155	159	165	167	168	177	178	179	184	188	190	193	195	197	198	199	200	201
R528	1	17	60	98	104	107	114	158	167	170	173	182	184	189	194	197	199	200	201	204	206	207	208	209
R529	1	19	98	107	131	169	173	177	182	188	191	198	199	202	205	215	221	222	223	225	226	229	230	237
R530	1	98	107	125	170	189	198	199	202	205	214	215	221	226	229	232	233	235	236	239	240	241	246	247
R531	28	88	111	127	157	163	164	170	174	183	186	191	192	194	196	197	198	200	201	202	203	204	206	207
R532	95	136	154	159	168	173	193	203	214	223	224	226	229	230	232	239	240	248	253	264	265	273	277	282
R533	1	16	98	107	121	128	158	163	180	182	189	195	198	199	202	205	208	216	220	223	225	226	238	240
R534	1	43	76	107	123	126	171	176	177	182	184	187	188	189	191	193	198	199	202	205	208	213	215	216
R535	1	15	98	104	105	107	109	133	162	163	167	172	182	183	184	189	190	194	195	197	198	199	200	201
R536	42	94	108	135	144	154	160	167	168	173	184	190	192	194	197	198	199	200	201	202	204	205	206	207
R537	1	30	64	90	98	100	107	114	127	134	144	156	158	162	168	182	183	196	197	198	199	200	201	203
R538	1	14	32	75	85	90	91	98	106	107	114	140	155	158	161	164	166	171	173	180	182	186	187	189
R539	193	267	281	285	286	289	297	300	301	306	307	308	312	315	318									
R540	13	78	155	177	186	189	191	194	196	197	198	199	200	201	202	203	204	205	206	207	209	210	211	212

Copyright © 2005 IEEE. All rights reserved.
This is an unapproved draft, subject to change

Table 55A–1—P matrix: location 1 to 24

	C1	C2	C3	C4	C5	C6	C7	C8	C9	C10	C11	C12	C13	C14	C15	C16	C17	C18	C19	C20	C21	C22	C23	C24
R541	26	94	122	126	154	171	173	181	187	188	193	195	198	199	202	204	205	209	213	214	216	217	218	219
R542	1	12	98	103	107	122	123	146	154	157	162	165	171	176	178	182	187	188	189	193	197	198	199	200
R543	72	105	112	114	156	158	163	168	173	195	197	200	201	202	204	205	206	207	209	210	211	212	213	219
R544	11	36	57	102	120	158	159	164	169	179	182	183	186	190	193	196	198	199	202	203	204	205	208	209
R545	21	40	79	128	129	148	160	162	171	182	184	185	187	189	192	193	194	195	199	202	203	205	211	213
R546	23	45	97	127	145	160	167	175	183	184	185	190	192	195	197	199	201	204	206	207	209	210	211	212
R547	1	41	93	98	102	107	124	127	146	159	165	171	174	177	182	183	187	189	191	197	198	199	200	201
R548	24	34	51	87	95	106	110	149	152	154	157	159	162	168	169	174	177	188	190	191	193	197	198	199
R549	1	10	33	37	94	98	107	135	136	143	155	163	173	175	182	185	189	193	195	198	202	205	215	216
R550	138	142	174	205	209	213	214	217	221	223	224	230	231	232	236	239	240	241	242	243	245	246	247	248
R551	9	46	82	98	105	130	138	139	143	150	153	154	155	157	160	162	163	165	171	174	175	176	182	191
R552	155	187	193	245	252	259	260	261	264	267	269	271	273	275	277	280	281	285	289	290	291	299	305	306
R553	68	92	119	155	160	163	165	168	174	178	188	192	194	197	198	200	201	202	203	204	206	207	208	209
R554	1	91	98	106	107	113	128	162	164	171	175	182	185	186	187	189	194	196	197	200	201	203	204	206
R555	47	50	73	121	125	127	147	163	175	177	180	183	185	191	193	194	197	200	201	203	204	206	207	209
R556	59	108	109	146	154	160	165	167	172	183	184	190	192	194	195	198	202	203	208	215	216	217	221	223
R557	1	53	98	100	101	107	144	152	156	160	168	169	175	182	185	193	194	195	197	200	203	208	214	215
R558	8	25	69	131	150	151	157	158	164	171	175	176	177	185	186	187	191	194	196	197	198	199	200	201
R559	90	145	162	164	166	167	175	184	185	186	190	193	194	196	203	206	207	208	210	211	212	213	216	218
R560	63	65	113	154	160	164	183	186	192	194	195	196	197	198	200	201	202	204	205	206	207	209	210	211
R561	89	168	186	196	209	252	260	265	266	267	268	269	271	273	277	279	284	287	289	290	295	298	299	301
R562	1	95	98	107	116	128	167	168	182	184	189	190	198	199	202	205	207	208	214	215	216	220	221	226
R563	1	16	98	107	128	135	142	154	182	183	185	189	198	202	205	208	215	217	220	223	224	226	228	230
R564	1	98	107	165	182	184	189	198	199	202	205	208	216	221	226	229	230	232	233	236	241	244	247	248
R565	1	15	32	91	98	105	107	137	162	163	171	172	180	182	189	195	197	198	199	200	201	202	203	205
R566	67	94	97	132	152	154	169	173	181	192	194	197	199	201	203	204	206	207	208	209	211	213	214	215
R567	1	43	98	126	171	181	182	187	188	189	193	208	213	216	222	224	225	226	229	230	233	235	236	237
R568	1	14	98	104	106	107	139	143	157	160	162	167	175	184	185	188	190	192	193	194	195	198	202	203
R569	1	56	89	98	103	107	152	157	168	169	171	178	182	187	188	189	198	199	202	205	208	214	216	221
R570	1	13	38	69	92	98	107	131	157	158	168	175	177	182	185	186	193	194	196	197	200	201	203	204
R571	12	50	65	105	121	123	146	147	154	165	176	180	213	216	220	221	228	229	230	231	238	239	240	246
R572	1	98	107	150	156	176	179	182	188	189	198	199	202	205	208	216	221	223	225	226	229	230	232	238
R573	1	11	70	84	93	98	100	107	111	112	120	124	133	141	156	159	161	163	169	177	182	183	185	189
R574	119	129	155	165	171	178	182	187	193	198	202	203	205	207	208	216	221	223	225	230	232	238	239	240
R575	54	86	106	131	147	161	162	177	189	190	191	197	200	201	203	204	206	207	210	211	212	213	216	217
R576	1	77	85	90	93	98	99	107	114	117	134	140	155	158	159	161	162	164	165	166	167	177	178	182
R577	1	44	98	155	166	182	189	198	199	202	203	205	211	213	215	216	219	221	222	224	225	229	230	232
R578	10	31	131	141	161	163	173	177	179	185	189	190	191	194	195	197	198	199	200	201	202	203	204	205
R579	1	9	72	98	103	105	107	112	123	138	143	157	162	163	168	171	174	175	176	178	182	185	188	189
R580	1	57	74	98	107	109	155	158	159	172	183	189	193	197	200	201	204	206	207	208	209	210	211	212
R581	40	92	148	162	168	184	185	188	197	200	201	203	204	206	208	209	210	212	215	216	217	219	220	222
R582	1	23	91	97	98	107	127	136	148	154	160	162	171	177	182	183	185	187	189	191	192	193	194	195
R583	1	61	98	107	121	162	163	174	178	180	182	189	195	197	198	199	200	201	202	203	204	206	207	209
R584	29	80	91	114	117	141	154	158	161	165	171	173	179	183	185	187	190	193	195	197	200	201	203	204
R585	1	98	102	107	115	132	154	167	181	182	184	189	190	199	208	215	220	224	226	227	231	232	233	235
R586	8	78	150	151	155	163	171	176	187	188	193	195	200	225	228	232	233	234	236	239	241	243	244	245
R587	90	110	157	162	164	174	186	188	196	197	198	199	200	201	202	203	206	207	208	210	211	212	213	219
R588	1	98	107	122	146	154	165	182	189	198	199	202	205	208	217	219	221	224	225	231	232	235	239	240
R589	20	76	89	98	117	138	150	165	168	176	177	188	191	197	200	201	203	204	206	207	208	210	211	212
R590	36	88	133	158	164	170	182	183	186	188	196	215	223	230	234	240	245	249	253	255	258	261	262	263
R591	7	21	42	108	118	128	144	145	153	155	163	168	171	175	177	183	185	187	189	191	194	195	197	198
R592	1	30	47	98	107	114	125	127	144	158	168	172	173	177	182	183	189	191	195	196	197	200	201	203
R593	1	6	63	73	98	105	107	113	125	127	163	164	175	179	182	183	185	189	193	194	195	197	198	199
R594	1	59	64	79	90	98	100	107	109	129	134	146	156	162	164	165	171	172	173	183	186	187	193	196
R595	1	5	98	107	182	189	198	199	201	202	203	204	205	206	207	209	210	211	212	213	214	215	217	219
R596	4	25	116	124	149	164	165	167	174	175	184	185	186	190	193	194	196	197	198	199	201	202	204	206
R597	3	34	95	173	191	201	203	204	206	207	208	209	210	211	212	213	214	215	216	217	219	221	222	224
R598	1	33	62	92	94	98	107	136	143	146	154	160	165	168	171	173	175	180	182	185	187	188	189	192
R599	51	110	120	154	157	169	174	177	179	188	191	198	199	202	216	220	221	223	224	229	232	234	235	238
R600	37	49	81	93	115	119	135	154	159	167	170	177	178	184	190	191	193	195	197	200	201	202	203	204

Copyright © 2005 IEEE. All rights reserved.
This is an unapproved draft, subject to change

Table 55A–1—P matrix: location 1 to 24

	C1	C2	C3	C4	C5	C6	C7	C8	C9	C10	C11	C12	C13	C14	C15	C16	C17	C18	C19	C20	C21	C22	C23	C24
R601	82	98	127	130	141	154	161	162	179	183	189	190	191	197	200	201	203	204	206	207	209	210	211	212
R602	1	19	98	107	126	159	171	173	181	182	187	203	208	213	221	223	224	225	226	230	232	235	236	239
R603	99	113	130	154	162	164	166	186	195	196	197	200	201	204	206	207	209	210	211	212	213	214	219	220
R604	1	45	87	98	106	107	131	144	145	149	162	167	168	175	177	182	184	185	189	190	191	194	197	201
R605	1	98	107	182	189	198	199	202	205	207	208	216	224	226	232	233	235	236	238	240	241	244	245	247
R606	28	88	98	138	164	170	174	186	188	191	192	194	195	196	197	198	200	201	202	203	204	206	207	208
R607	1	46	97	98	107	139	153	155	157	160	164	171	186	187	188	189	192	193	194	195	196	197	198	201
R608	18	53	101	122	125	154	160	169	175	185	193	194	195	197	200	201	204	205	206	207	208	209	210	211
R609	60	104	111	163	167	174	184	190	194	195	197	198	199	200	201	203	204	205	206	207	208	209	210	211
R610	1	75	98	107	166	180	182	189	198	199	202	203	205	214	215	219	221	223	225	229	230	234	235	244
R611	41	71	102	122	127	137	146	154	165	172	183	197	200	201	203	204	206	207	209	210	211	212	213	214
R612	1	24	96	98	107	147	152	159	167	169	176	179	182	184	189	193	194	195	197	200	201	204	206	207
R613	17	26	39	66	94	102	114	122	123	126	151	154	158	165	169	170	173	176	181	185	195	198	202	205
R614	22	83	99	112	138	140	146	155	161	165	166	174	189	190	195	197	200	201	202	203	204	206	207	208
R615	27	35	48	108	129	154	160	167	171	182	187	190	192	193	194	195	197	199	200	201	204	206	208	209
R616	52	68	101	157	162	163	172	175	181	185	188	193	194	197	200	201	203	204	206	207	208	209	210	211
R617	1	2	55	96	98	107	118	142	165	167	177	179	182	184	187	190	191	193	195	196	198	199	202	214
R618	1	41	98	102	107	127	146	153	155	165	171	182	183	187	189	191	193	198	199	202	205	208	216	220
R619	24	62	92	146	152	159	160	165	168	169	172	180	190	192	193	194	195	198	202	205	214	217	223	224
R620	1	20	98	107	117	120	138	149	150	165	167	169	174	176	179	182	184	188	189	190	198	199	200	202
R621	1	98	99	107	146	165	166	168	182	189	195	198	199	202	203	205	214	217	226	229	231	232	233	235
R622	1	53	67	97	98	101	107	132	152	154	160	169	175	181	182	185	189	193	194	195	197	198	199	201
R623	98	105	163	195	208	216	217	222	230	231	237	238	239	240	241	242	244	246	247	249	250	251	253	254
R624	58	97	144	168	200	213	214	215	217	219	221	224	225	226	229	231	232	233	236	237	241	242	244	246
R625	1	18	64	90	98	100	107	122	125	134	154	156	162	164	173	177	182	186	191	196	197	200	201	203
R626	49	84	114	119	133	141	155	158	161	165	173	178	179	183	185	189	190	198	199	203	216	221	223	225
R627	102	137	172	175	185	193	194	198	199	202	205	208	216	217	220	232	234	236	238	240	241	242	243	244
R628	1	19	54	85	90	96	98	107	114	140	147	155	158	161	162	164	167	179	182	184	186	188	189	195
R629	1	17	50	98	114	117	121	147	158	163	165	170	173	180	182	189	192	194	197	200	201	203	204	206
R630	1	98	100	107	139	145	156	157	160	167	175	184	185	188	190	192	193	195	199	203	208	215	216	219
R631	1	51	95	98	107	110	154	157	160	168	174	177	182	188	189	191	192	194	195	197	198	200	201	202
R632	16	37	78	128	135	154	186	195	196	199	202	205	215	216	220	224	229	230	232	235	236	238	239	241
R633	75	115	166	167	190	199	203	204	208	209	215	217	219	225	226	231	232	233	236	239	240	241	243	245
R634	15	73	87	105	106	122	127	149	154	163	175	183	185	193	194	195	197	198	199	200	201	202	203	204
R635	59	94	109	146	151	165	171	172	173	183	187	193	194	195	198	199	202	205	216	217	225	226	230	232
R636	1	26	94	98	107	122	126	138	140	154	155	161	171	173	174	181	182	187	188	190	193	195	197	200
R637	14	25	46	48	76	98	106	139	153	154	155	157	160	162	164	171	175	177	182	185	186	187	188	189
R638	133	173	183	190	193	198	199	202	205	216	221	226	230	232	236	238	241	249	251	258	261	263	268	270
R639	13	42	108	131	144	160	167	168	177	184	186	189	190	191	192	194	195	196	197	198	200	201	202	204
R640	30	114	123	127	144	147	158	168	173	176	183	196	213	216	217	220	221	223	224	229	232	234	235	237
R641	1	12	28	79	88	98	107	109	123	129	146	148	162	164	165	170	171	172	176	185	186	187	188	189
R642	61	156	162	174	197	200	201	203	204	205	208	209	214	215	216	218	221	223	224	228	229	230	232	234
R643	1	11	27	98	107	120	124	169	174	179	180	182	184	189	190	198	199	202	203	204	208	209	214	216
R644	1	29	34	63	71	95	98	107	113	122	137	154	164	168	172	182	183	186	196	197	198	199	200	201
R645	1	33	72	94	98	105	107	112	136	143	154	163	168	173	175	185	189	193	194	197	198	199	200	201
R646	39	57	93	165	169	173	176	177	183	185	191	197	200	201	203	204	206	207	208	209	210	211	212	213
R647	22	40	66	102	112	123	136	146	148	154	162	165	176	184	185	188	197	200	201	202	204	205	206	208
R648	1	10	23	97	98	107	121	127	152	160	169	180	182	183	189	192	195	198	200	202	203	205	215	216
R649	35	69	108	129	131	157	158	160	164	167	171	177	182	184	186	187	188	190	191	192	193	194	195	196
R650	9	101	138	143	160	166	174	187	192	193	194	196	197	198	200	201	202	203	204	206	207	208	210	211
R651	86	131	134	155	161	173	177	189	190	191	198	199	202	205	208	221	222	223	230	233	236	237	242	243
R652	44	55	77	92	96	99	107	155	168	178	179	188	205	214	216	222	223	225	229	231	233	237	238	242
R653	1	31	65	91	98	107	118	131	141	154	161	171	179	182	185	187	189	190	193	197	198	199	200	201
R654	1	60	80	91	98	104	107	112	117	141	161	165	167	171	179	182	184	185	187	193	194	202	203	205
R655	1	8	32	91	98	107	110	132	142	150	151	154	157	174	176	180	181	182	189	197	200	201	203	205
R656	1	90	98	107	162	164	165	170	182	186	189	196	197	200	201	203	204	206	207	209	210	211	212	213
R657	127	174	183	187	193	205	226	236	242	245	249	251	259	264	273	275	277	280	281	287	290	291	297	298
R658	159	189	193	203	226	232	247	253	265	266	268	269	270	271	272	274	275	276	278	279	280	281	282	283
R659	1	45	89	98	107	143	145	158	167	168	182	184	189	190	193	197	198	199	200	201	202	203	204	205
R660	47	56	83	88	89	99	103	125	138	157	162	166	168	170	171	174	177	178	187	191	193	197	198	199

Copyright © 2005 IEEE. All rights reserved.
This is an unapproved draft, subject to change

Table 55A–1—P matrix: location 1 to 24

	C1	C2	C3	C4	C5	C6	C7	C8	C9	C10	C11	C12	C13	C14	C15	C16	C17	C18	C19	C20	C21	C22	C23	C24
R661	7	38	82	92	98	108	118	130	154	160	162	163	167	168	177	183	184	185	188	189	190	191	192	194
R662	1	36	52	98	107	158	162	164	172	179	186	189	196	203	216	221	225	226	230	231	234	236	240	243
R663	21	70	111	116	124	128	160	163	167	184	190	192	194	197	198	200	201	203	204	206	208	209	210	211
R664	1	6	98	105	107	113	125	129	163	164	171	179	185	186	187	189	193	195	196	198	199	202	205	207
R665	5	43	125	126	150	171	176	181	187	193	208	213	214	216	221	222	223	225	232	233	235	236	237	238
R666	1	4	81	98	104	107	111	115	116	163	167	174	182	184	189	190	194	195	197	199	200	201	203	204
R667	3	119	130	141	154	155	161	162	165	173	178	179	185	189	190	197	200	203	215	220	221	224	225	226
R668	1	68	98	106	107	126	160	161	162	163	171	181	182	187	188	190	192	193	194	198	202	203	205	208
R669	2	74	142	158	165	187	193	217	221	223	230	231	232	234	235	237	239	240	241	242	247	252	254	257
R670	1	31	98	107	131	141	155	161	164	177	179	182	185	186	190	191	196	198	199	202	205	210	212	218
R671	1	92	98	168	182	188	189	198	199	202	205	208	214	221	222	226	231	232	236	237	240	241	242	246
R672	1	36	51	64	81	90	98	100	105	107	110	115	134	154	156	157	158	162	163	165	167	173	174	177
R673	1	21	37	98	107	128	135	141	154	155	160	161	179	182	185	190	192	194	197	200	201	202	204	205
R674	83	99	126	138	145	154	166	167	171	174	175	181	184	185	187	188	190	194	195	197	200	201	204	205
R675	1	8	52	98	107	143	150	151	160	162	171	172	175	176	182	185	187	188	189	192	195	198	202	203
R676	56	89	90	103	116	157	164	167	168	171	178	184	187	188	190	193	198	199	202	207	214	215	216	221
R677	1	38	53	92	98	101	107	160	168	175	188	189	191	193	194	195	197	198	199	200	201	202	204	205
R678	1	41	86	89	98	102	107	127	131	136	142	146	154	161	165	168	177	182	183	190	191	198	199	202
R679	1	24	77	88	98	99	107	121	152	159	163	165	166	167	169	170	178	180	182	184	188	189	193	198
R680	1	7	98	107	118	163	176	177	182	183	187	191	193	198	199	202	205	211	213	214	215	219	224	225
R681	66	84	93	102	123	132	133	141	154	159	161	176	177	179	181	183	185	188	189	190	191	193	197	200
R682	1	6	35	54	98	105	107	108	125	129	147	160	163	167	171	177	179	184	187	189	190	191	192	193
R683	87	101	106	117	130	149	154	160	165	175	185	192	193	199	200	203	208	215	221	226	229	239	240	244
R684	5	161	189	190	208	216	222	223	224	226	229	232	235	237	238	241	242	243	244	245	246	247	248	249
R685	1	4	98	107	114	116	138	158	165	167	173	174	181	182	184	189	190	205	207	208	209	214	215	221
R686	1	3	46	98	102	107	139	153	155	157	160	171	173	187	188	189	192	193	194	195	197	198	200	202
R687	43	126	135	148	154	162	171	181	185	187	188	193	197	198	200	201	202	203	204	205	206	208	209	210
R688	1	61	98	104	107	162	167	174	182	184	189	190	194	205	208	215	220	223	226	229	230	233	236	239
R689	32	91	144	168	171	178	180	187	189	193	197	200	201	203	206	207	210	211	212	213	214	217	219	220
R690	1	29	45	85	90	98	107	114	140	145	155	158	161	162	164	167	173	175	182	183	184	185	186	189
R691	1	73	98	107	115	127	167	175	182	183	184	185	189	190	193	194	197	199	200	201	203	204	206	207
R692	59	99	109	146	165	166	172	183	195	196	197	201	204	206	207	209	210	211	212	213	214	215	219	220
R693	1	49	93	98	103	107	119	155	157	159	162	165	171	177	182	187	188	189	191	198	199	201	203	204
R694	1	25	55	79	96	98	107	129	164	167	170	171	175	179	184	185	186	187	189	190	194	195	196	197
R695	1	19	98	107	118	127	173	177	182	183	188	189	191	198	199	202	205	207	208	214	216	226	229	232
R696	1	72	105	107	112	124	159	163	168	174	182	189	193	195	198	199	203	205	214	217	221	222	223	226
R697	1	34	57	95	97	98	107	158	159	168	182	183	189	193	198	199	200	202	203	205	214	215	219	221
R698	18	33	40	94	122	125	136	143	148	162	173	175	184	193	194	195	198	199	202	207	211	213	214	215
R699	23	60	97	104	127	160	167	169	183	184	188	190	192	195	199	200	203	208	214	218	219	220	221	223
R700	1	20	98	107	117	125	138	146	150	152	169	174	176	182	188	189	205	209	213	215	216	217	224	225
R701	1	69	98	107	111	131	157	158	163	174	177	179	182	188	189	191	195	198	199	202	208	216	220	221
R702	70	111	124	151	163	166	171	187	193	195	217	220	225	231	233	236	239	245	246	247	249	250	251	253
R703	1	96	98	107	129	140	153	161	167	179	184	195	197	200	201	203	204	206	208	209	210	211	212	213
R704	1	17	48	98	107	114	154	158	170	172	173	182	189	197	198	200	201	202	203	204	205	206	207	209
R705	80	91	117	141	147	161	165	167	171	179	184	185	187	189	193	197	200	201	203	204	206	207	209	210
R706	1	65	98	107	154	157	163	182	188	189	195	198	199	202	205	208	216	217	224	226	230	231	232	233
R707	27	95	110	157	168	174	184	188	191	205	208	214	216	221	223	228	232	235	236	239	241	242	243	244
R708	16	62	76	92	98	112	128	146	160	165	168	173	177	180	188	191	192	194	195	197	198	200	201	203
R709	120	133	169	179	183	184	198	202	205	221	223	230	236	238	239	240	243	246	252	253	254	256	263	265
R710	15	42	105	108	123	144	149	160	162	163	167	168	176	184	190	192	194	198	200	202	203	205	208	214
R711	1	30	94	98	107	109	114	127	144	150	158	172	175	176	182	183	185	188	189	193	194	195	196	208
R712	1	14	50	78	98	106	107	119	121	147	162	163	165	178	180	182	195	197	198	199	200	201	202	204
R713	74	106	158	162	193	197	200	201	202	203	205	206	207	208	210	211	212	216	219	220	221	222	225	226
R714	1	13	75	98	100	107	122	154	156	166	182	186	189	192	194	195	196	197	199	200	201	204	206	207
R715	12	68	123	139	146	157	163	165	176	182	188	194	195	197	200	201	203	204	206	207	208	209	210	211
R716	1	26	67	94	97	98	107	122	126	128	132	152	156	162	169	171	173	180	182	187	188	189	193	195
R717	11	71	120	122	137	154	169	172	179	190	197	200	201	203	215	218	221	228	231	234	237	241	243	245
R718	1	39	63	98	107	113	164	165	169	173	174	182	185	186	189	196	198	199	202	208	214	216	221	225
R719	1	22	58	82	93	107	112	130	146	154	159	162	165	177	182	185	189	193	198	199	208	209	213	214
R720	1	10	47	98	107	125	163	177	182	183	189	191	194	197	198	199	200	201	202	203	204	205	206	207

Copyright © 2005 IEEE. All rights reserved.
This is an unapproved draft, subject to change

Table 55A–1—P matrix: location 1 to 24

	C1	C2	C3	C4	C5	C6	C7	C8	C9	C10	C11	C12	C13	C14	C15	C16	C17	C18	C19	C20	C21	C22	C23	C24
R721	1	98	107	108	113	134	160	164	167	173	182	184	186	189	190	192	194	195	196	197	198	200	201	202
R722	9	44	107	137	138	143	155	166	172	174	175	185	187	194	198	199	202	203	209	214	221	222	231	232
R723	5	71	114	122	130	137	158	162	172	173	208	216	221	222	223	224	229	231	234	235	237	239	244	245
R724	95	161	168	180	189	190	199	205	208	214	221	223	226	230	234	235	236	244	245	246	247	257	261	262
R725	1	16	53	71	98	101	107	122	128	137	154	160	172	175	182	185	189	193	194	195	203	208	217	220
R726	15	39	105	162	163	165	169	173	185	189	197	200	201	203	204	206	207	209	210	211	212	213	214	217
R727	1	22	45	94	98	107	112	132	145	146	154	165	167	173	175	181	182	184	185	189	190	194	195	198
R728	148	162	185	197	200	201	203	204	207	208	209	214	215	216	217	218	219	221	224	225	226	228	229	231
R729	14	61	106	174	189	205	208	213	216	223	224	226	229	232	235	238	241	242	243	244	246	247	250	251
R730	63	67	97	105	113	132	152	154	163	164	169	181	186	193	195	196	198	199	200	202	205	214	215	216
R731	13	29	183	186	196	209	214	221	223	228	230	232	234	235	240	244	245	249	250	251	252	253	254	257
R732	12	41	51	102	110	123	127	140	154	155	157	161	174	176	177	183	188	189	190	191	197	198	199	200
R733	1	24	37	48	74	98	107	135	152	155	156	158	159	169	182	189	190	193	195	198	202	203	205	215
R734	11	76	98	120	169	177	179	190	191	204	209	214	215	217	222	231	232	235	239	241	246	247	249	253
R735	78	133	153	171	183	187	193	198	199	202	205	216	225	228	230	232	233	234	238	241	243	245	246	249
R736	42	108	144	160	167	168	172	177	184	190	191	192	194	195	198	202	203	204	205	208	209	215	216	224
R737	30	93	114	122	127	144	154	158	159	167	168	173	177	183	184	190	191	193	196	197	200	201	204	206
R738	10	66	102	114	123	158	163	164	173	176	186	188	194	195	196	197	198	199	200	201	202	203	204	205
R739	82	98	102	130	154	162	185	191	197	200	201	203	204	206	207	208	209	210	211	212	214	217	219	223
R740	1	9	35	49	93	98	107	108	119	129	138	143	155	159	160	165	167	171	174	175	177	178	184	185
R741	1	98	101	107	150	155	160	175	176	182	185	188	189	192	193	198	202	203	205	216	223	224	226	229
R742	1	19	92	98	107	113	164	168	173	182	186	192	194	195	196	197	198	200	201	202	203	204	205	206
R743	60	86	91	104	119	131	155	161	165	167	171	177	178	184	187	189	191	193	194	198	199	202	203	205
R744	77	99	106	139	157	160	162	166	167	178	182	184	188	190	192	194	199	213	216	223	229	232	233	234
R745	1	98	107	144	162	168	182	189	197	198	199	200	201	202	203	204	205	206	207	209	210	215	220	226
R746	1	73	84	93	98	107	127	133	141	159	161	175	177	179	182	190	191	194	198	199	202	203	205	208
R747	8	43	59	109	126	146	150	151	165	172	176	181	183	197	198	199	200	201	202	203	204	205	206	207
R748	1	54	90	98	104	107	147	162	164	167	182	184	186	189	190	191	194	196	198	199	201	203	204	206
R749	1	25	62	75	92	98	107	117	146	160	164	166	168	175	180	182	185	186	188	189	192	193	195	196
R750	1	70	89	98	107	111	124	125	163	168	182	189	194	195	197	198	199	200	201	202	204	205	206	207
R751	1	26	64	88	90	94	98	100	107	111	122	126	129	134	154	156	162	163	164	170	174	181	186	196
R752	1	7	98	107	118	149	163	177	182	183	191	195	198	199	200	202	205	214	215	221	223	229	230	232
R753	168	214	218	220	221	224	253	257	261	262	263	265	266	270	272	274	276	278	279	281	283	284	285	286
R754	1	80	91	98	107	117	134	141	143	161	165	171	173	175	179	182	187	190	194	198	199	202	205	213
R755	1	6	44	56	89	98	103	105	125	155	157	162	163	166	168	171	174	178	179	182	187	188	189	193
R756	1	31	38	92	98	107	131	141	161	163	168	177	179	182	185	188	190	195	196	198	199	202	205	214
R757	1	5	98	107	110	157	174	182	188	189	198	199	202	203	222	223	224	226	230	234	235	237	244	247
R758	4	47	55	96	116	125	145	165	167	175	177	179	184	185	190	191	193	194	197	200	201	203	204	205
R759	1	3	98	107	108	118	160	167	173	175	177	182	184	185	190	191	192	193	195	198	201	202	204	205
R760	160	173	192	194	195	197	198	200	201	202	204	205	206	207	209	210	211	212	213	214	216	217	219	220
R761	50	81	115	121	147	163	165	167	180	184	186	188	190	195	196	199	213	215	220	221	223	224	226	230
R762	1	20	98	107	117	123	138	141	150	161	165	174	179	182	185	188	190	198	199	202	209	213	214	220
R763	100	109	126	156	170	171	172	181	187	188	189	193	197	198	199	200	201	202	203	204	205	206	207	209
R764	72	83	99	105	112	127	138	163	166	168	174	183	202	208	209	216	217	221	226	229	230	231	232	238
R765	40	52	87	99	106	148	149	158	162	166	172	184	185	195	200	203	207	208	211	216	221	231	238	239
R766	23	97	116	127	137	160	167	172	178	183	184	190	192	194	195	198	200	202	203	205	207	218	219	220
R767	1	98	107	138	174	182	185	189	198	199	202	208	209	210	212	214	216	218	220	221	222	224	226	228
R768	1	46	85	90	98	114	139	140	153	157	158	160	161	162	164	171	173	186	187	188	192	193	194	195
R769	1	107	115	131	167	177	181	182	184	189	190	191	199	208	215	216	226	229	230	232	233	239	241	243
R770	1	18	28	88	98	107	122	125	135	164	170	186	188	189	191	192	194	195	196	197	200	201	203	204
R771	1	98	103	107	152	157	162	169	171	178	182	187	188	189	193	198	199	202	205	208	214	216	221	223
R772	32	36	69	91	131	136	154	157	164	171	177	180	182	186	187	188	191	193	196	197	198	199	200	201
R773	1	21	98	107	121	128	146	160	163	165	166	180	182	189	192	194	197	199	200	201	202	203	204	205
R774	68	96	160	163	165	167	179	184	190	192	194	195	197	198	200	201	202	204	205	206	207	209	210	211
R775	1	17	98	107	114	128	158	170	173	182	187	189	193	198	202	205	208	215	217	220	221	223	229	230
R776	1	58	65	98	107	154	182	189	198	199	202	205	208	213	216	226	229	230	232	233	236	238	241	244
R777	1	98	107	112	130	147	154	157	162	182	188	189	197	198	199	200	201	204	206	207	208	209	210	211
R778	1	4	98	102	107	116	151	161	165	167	169	171	182	184	187	193	198	199	202	205	207	215	216	220
R779	1	47	92	98	107	125	139	157	160	168	177	189	191	192	194	197	199	200	201	204	206	207	209	210
R780	58	85	90	91	108	114	140	150	155	158	160	161	164	167	171	173	176	184	186	187	188	189	192	193

Copyright © 2005 IEEE. All rights reserved.
This is an unapproved draft, subject to change

Table 55A–1—P matrix: location 1 to 24

	C1	C2	C3	C4	C5	C6	C7	C8	C9	C10	C11	C12	C13	C14	C15	C16	C17	C18	C19	C20	C21	C22	C23	C24
R781	119	143	155	165	175	178	185	193	194	197	198	199	200	201	202	204	205	206	207	209	210	211	213	214
R782	1	56	89	98	103	106	107	154	157	168	171	178	182	187	188	189	193	198	199	202	205	208	213	214
R783	1	38	81	92	98	103	107	115	146	157	162	167	168	171	178	182	184	187	190	191	193	197	198	200
R784	1	8	45	98	107	141	145	150	151	161	167	171	175	176	179	180	182	184	187	188	193	194	203	208
R785	71	80	90	91	117	122	126	137	141	154	161	162	164	165	172	179	181	185	186	188	189	190	196	197
R786	39	163	165	169	173	181	185	195	198	199	202	205	216	218	220	223	224	225	226	229	233	235	238	239
R787	1	22	89	98	107	110	112	134	146	157	165	168	173	174	182	188	189	202	203	214	216	221	229	230
R788	1	44	72	88	98	105	112	135	154	155	163	166	168	170	182	188	189	195	198	208	214	216	217	221
R789	7	31	57	118	131	141	159	161	163	179	185	190	193	195	203	208	214	216	222	225	230	232	233	235
R790	32	40	49	91	93	119	148	155	159	162	165	169	171	177	178	180	184	185	187	191	197	200	201	202
R791	1	23	97	98	107	125	127	144	160	168	182	183	189	192	194	195	197	198	201	204	206	207	209	210
R792	1	6	19	75	82	105	107	111	125	130	154	162	166	173	174	179	182	185	188	191	197	200	201	204
R793	1	5	65	98	107	154	173	182	189	194	197	200	201	203	204	206	207	209	210	211	212	213	214	216
R794	4	26	94	113	116	122	126	154	164	165	167	171	173	181	184	186	187	188	190	193	195	196	198	199
R795	1	3	98	107	112	123	142	173	176	182	189	198	199	201	204	206	207	208	209	210	211	212	213	214
R796	67	97	109	132	152	154	165	169	172	181	197	198	201	202	203	204	205	206	207	208	209	210	211	212
R797	1	84	93	98	107	133	141	145	159	161	167	175	177	179	182	183	184	187	191	193	194	198	199	202
R798	54	78	147	155	160	192	194	195	197	198	200	201	202	204	205	206	207	210	211	212	216	219	220	221
R799	64	90	100	117	134	152	156	162	164	165	169	173	189	197	200	201	203	206	207	210	211	212	217	220
R800	1	69	98	107	122	131	154	157	158	177	182	188	189	191	198	199	202	205	208	216	222	224	226	228
R801	1	98	107	132	147	154	181	182	189	206	207	208	210	211	212	215	216	218	219	220	221	222	223	225
R802	1	63	68	86	98	107	113	131	160	161	163	164	177	182	186	190	191	192	194	196	197	199	200	201
R803	27	77	98	99	128	166	167	178	179	190	195	203	209	214	215	220	222	223	225	228	230	234	235	236
R804	70	97	111	124	153	155	163	171	187	193	195	200	203	208	211	213	216	220	221	223	224	225	229	233
R805	18	122	125	129	154	171	172	176	182	187	193	197	200	201	203	204	205	206	209	210	211	212	213	217
R806	1	66	83	98	99	102	107	123	138	166	167	174	176	182	184	188	189	190	195	198	199	202	203	208
R807	1	35	52	73	98	107	108	127	129	160	162	167	171	172	175	183	184	185	187	189	190	192	195	199
R808	1	59	98	101	107	109	116	146	160	165	167	172	175	182	183	184	185	189	190	192	193	197	198	200
R809	1	96	98	107	167	179	182	184	185	189	195	198	199	201	202	203	204	205	206	207	209	210	211	212
R810	17	25	114	131	158	164	170	173	175	177	185	186	188	191	193	194	197	199	200	201	203	204	206	207
R811	20	60	104	117	138	150	165	167	174	176	184	188	190	194	197	198	199	200	201	202	203	204	206	207
R812	28	55	87	88	96	106	149	162	164	167	170	179	184	186	188	190	191	192	194	196	198	200	202	213
R813	1	98	107	118	157	177	182	188	191	198	199	202	205	214	221	229	232	233	235	236	239	240	241	244
R814	1	41	76	95	102	107	127	138	146	165	168	174	177	182	183	189	191	198	199	202	208	209	215	217
R815	16	24	46	128	133	139	152	153	155	157	159	160	169	171	182	183	187	188	190	191	192	194	195	197
R816	1	42	62	92	98	107	108	144	146	165	167	180	182	183	188	189	190	198	199	202	205	208	215	216
R817	1	15	30	98	105	107	114	120	127	144	158	162	163	168	169	173	179	182	183	189	195	196	197	198
R818	43	94	126	137	172	173	181	188	195	197	198	199	200	201	202	203	204	205	206	207	209	210	211	212
R819	1	51	74	98	104	107	110	154	157	158	167	174	177	178	182	184	188	189	190	191	194	197	198	199
R820	1	14	37	98	106	135	154	155	162	175	182	185	193	194	195	199	213	215	216	222	227	228	230	231
R821	13	50	115	121	147	163	167	180	184	186	189	190	195	196	199	208	213	215	216	223	224	226	228	234
R822	79	129	130	154	162	171	182	187	193	197	198	199	201	202	203	204	205	206	208	209	210	211	212	213
R823	12	100	123	146	156	161	165	176	190	219	220	221	223	225	226	228	231	232	233	234	236	239	241	246
R824	1	98	107	124	148	156	162	174	182	185	189	197	198	199	200	201	202	204	206	208	209	210	211	212
R825	11	34	61	95	105	120	162	163	168	169	174	179	190	195	197	200	201	203	206	207	208	210	211	212
R826	33	53	94	101	136	143	154	160	170	173	203	215	219	221	222	225	233	234	236	237	245	246	251	261
R827	29	127	189	240	247	253	254	261	265	266	268	269	270	272	273	274	275	276	277	278	280	281	283	284
R828	10	21	128	160	163	192	199	202	203	205	208	219	220	223	224	225	226	230	231	233	234	235	244	245
R829	1	98	107	114	136	149	154	158	173	174	182	189	198	199	200	202	213	215	221	229	233	234	239	240
R830	1	9	98	102	107	121	138	143	163	168	174	175	180	182	185	187	189	192	198	202	208	209	216	220
R831	3	39	125	140	155	161	165	169	185	189	190	197	198	199	200	202	205	214	215	216	220	225	226	228
R832	1	22	63	75	98	107	112	113	146	155	164	165	166	182	186	189	196	198	199	208	216	217	219	221
R833	1	28	80	88	91	92	98	107	117	141	161	164	165	168	170	171	179	182	185	186	187	190	191	192
R834	1	81	91	98	107	115	165	167	171	182	184	187	189	190	193	194	199	208	215	221	225	229	232	236
R835	1	26	94	98	107	122	126	141	154	161	163	171	173	179	181	182	185	187	190	193	213	216	218	220
R836	1	20	64	90	98	100	107	110	117	126	134	138	150	156	157	162	164	165	171	173	176	181	182	186
R837	85	90	114	140	148	155	158	161	164	173	185	186	189	190	196	197	198	199	200	201	202	203	204	205
R838	1	8	61	98	107	112	150	151	162	171	174	176	187	188	189	193	197	200	201	202	204	206	207	208
R839	1	90	98	107	162	164	182	186	189	196	197	199	200	201	203	204	206	207	209	210	211	212	213	214
R840	29	136	150	154	176	183	188	189	224	226	229	235	239	243	245	247	248	249	252	253	254	257	260	261

Copyright © 2005 IEEE. All rights reserved.
This is an unapproved draft, subject to change

Table 55A–1—P matrix: location 1 to 24

	C1	C2	C3	C4	C5	C6	C7	C8	C9	C10	C11	C12	C13	C14	C15	C16	C17	C18	C19	C20	C21	C22	C23	C24
R841	103	121	153	155	157	162	163	178	180	188	195	197	200	201	203	204	205	206	207	208	209	210	211	212
R842	1	53	89	98	101	107	119	155	160	165	168	172	175	178	182	185	189	193	194	195	208	214	223	224
R843	88	106	144	162	167	168	170	184	188	190	197	200	201	203	204	206	207	209	210	211	212	219	220	221
R844	1	7	68	98	107	118	160	177	182	183	191	192	194	195	197	199	200	201	204	206	207	209	210	211
R845	76	98	128	177	191	215	220	222	229	237	239	242	244	245	250	252	253	255	257	259	260	261	262	263
R846	72	105	112	133	163	168	183	192	194	197	199	200	201	202	204	205	206	207	209	210	211	212	213	216
R847	1	6	42	57	98	105	107	108	125	144	159	160	163	167	168	178	179	182	183	184	189	190	192	193
R848	1	30	40	98	107	114	127	139	144	148	157	158	160	162	168	173	183	184	185	188	189	192	194	195
R849	5	23	97	127	160	162	183	192	194	195	198	200	202	203	205	208	215	216	218	219	220	222	223	224
R850	1	4	98	107	115	116	147	165	182	198	202	205	207	213	221	224	230	233	234	235	236	240	243	245
R851	3	45	83	99	138	145	166	167	173	174	175	184	185	190	194	195	200	201	204	205	206	207	208	210
R852	60	87	104	106	149	162	167	184	190	194	198	199	200	202	205	213	216	217	224	227	229	230	232	235
R853	1	27	52	86	98	107	131	161	162	172	177	182	184	190	191	198	199	202	205	208	215	216	220	222
R854	77	99	116	138	166	174	177	178	191	195	203	205	207	208	209	214	216	221	229	233	234	235	236	238
R855	46	139	153	155	157	160	171	182	185	187	188	192	193	194	195	197	199	200	201	204	206	207	209	210
R856	1	56	79	89	98	103	107	114	129	157	158	162	168	173	178	188	189	197	200	201	203	204	206	209
R857	38	50	92	99	102	121	147	163	166	168	173	180	188	191	203	208	213	214	216	220	224	226	230	234
R858	1	34	95	98	100	107	123	156	168	176	182	198	199	202	205	214	219	220	221	223	225	226	229	231
R859	1	33	84	93	94	98	107	109	133	136	141	143	154	159	161	172	173	175	177	179	182	183	190	191
R860	1	47	49	93	107	119	125	155	159	165	178	182	189	193	195	197	200	201	202	203	204	205	206	207
R861	54	97	108	147	160	167	181	184	190	192	194	195	197	199	201	204	206	207	210	211	212	217	220	221
R862	1	18	19	98	107	117	122	125	154	165	173	182	188	197	200	201	203	204	205	206	207	209	210	211
R863	36	135	154	158	164	182	186	191	196	198	202	205	214	215	221	224	228	229	239	245	248	249	251	252
R864	1	21	62	67	92	97	98	107	128	132	146	152	154	165	168	169	180	181	182	188	189	200	202	205
R865	32	74	91	120	158	169	171	179	180	187	193	197	200	201	203	206	207	208	210	211	212	213	216	219
R866	1	58	96	98	107	149	167	179	182	184	189	190	195	198	199	200	202	205	208	213	216	221	224	225
R867	1	17	98	107	114	142	158	168	170	173	182	189	198	202	205	208	214	215	217	223	229	230	231	232
R868	1	43	51	98	107	110	126	145	154	167	171	174	175	177	181	182	184	185	187	188	189	190	191	194
R869	37	95	104	135	154	155	167	168	169	176	184	190	194	195	197	198	200	201	202	203	204	205	206	207
R870	16	66	102	123	125	128	160	176	188	192	194	195	196	197	199	200	201	204	206	207	208	209	210	211
R871	111	151	163	171	174	184	186	187	193	195	196	205	220	223	225	230	232	238	240	241	242	243	244	245
R872	1	15	35	55	96	98	105	107	108	129	140	155	160	161	162	163	171	179	187	190	192	193	194	195
R873	48	94	101	118	154	160	173	175	177	185	189	191	192	193	195	199	203	214	216	219	223	225	226	229
R874	1	73	82	107	127	130	154	162	175	182	183	189	191	193	194	208	222	223	224	226	230	233	234	235
R875	1	14	41	59	98	102	106	107	109	127	152	162	169	172	182	198	199	202	205	213	216	220	224	225
R876	24	69	131	152	157	158	159	169	177	188	190	191	201	204	206	207	209	210	211	212	213	214	215	217
R877	1	13	25	98	107	113	166	175	182	185	186	193	194	196	197	200	201	204	206	207	209	210	211	212
R878	12	123	130	146	154	162	165	176	195	197	200	201	203	204	206	207	208	209	210	211	212	213	214	216
R879	105	132	146	154	156	161	163	165	181	189	190	195	198	199	202	205	208	217	221	224	226	227	229	230
R880	11	120	169	179	190	204	209	214	217	218	220	224	229	231	232	237	241	242	246	247	248	249	251	252
R881	1	98	107	134	173	179	182	189	208	223	225	229	230	236	240	243	246	247	248	252	254	255	260	264
R882	44	70	107	111	124	155	163	164	166	186	195	196	216	220	222	229	230	233	237	238	242	246	248	249
R883	31	93	129	131	141	159	161	170	171	179	182	185	187	189	190	197	198	199	200	201	202	204	205	206
R884	78	127	155	180	183	226	228	249	251	252	253	260	265	266	267	270	281	286	298	301	308	310	312	316
R885	10	71	122	137	154	159	163	172	193	194	195	198	199	202	203	204	205	209	214	216	217	219	221	224
R886	122	154	158	190	206	207	210	211	212	215	218	219	220	221	222	223	225	226	227	228	231	232	233	234
R887	1	9	39	98	107	131	138	143	165	169	173	174	175	177	182	187	189	191	194	197	200	201	202	203
R888	1	22	48	98	107	111	112	144	146	154	163	165	168	174	182	189	195	198	199	203	205	214	217	219
R889	1	16	27	98	107	128	161	182	184	190	198	199	202	205	208	216	220	228	229	230	232	233	234	236
R890	47	125	150	164	176	177	184	186	188	191	195	196	198	199	202	205	208	213	214	221	223	224	229	230
R891	1	15	98	105	107	108	148	160	163	167	173	182	184	185	189	190	192	194	197	199	200	201	204	206
R892	61	94	119	155	162	165	173	174	178	195	197	200	201	204	205	206	207	209	210	211	212	213	214	217
R893	106	123	162	176	195	197	200	201	203	204	206	207	208	209	210	211	212	214	216	217	219	225	226	227
R894	1	14	29	98	106	107	109	132	154	162	172	181	182	183	189	208	213	218	220	223	224	226	227	230
R895	87	106	134	149	162	173	193	197	198	199	201	202	203	204	205	206	207	208	209	210	211	212	214	215
R896	1	13	44	49	93	98	119	159	165	166	177	178	182	186	191	193	196	197	198	199	200	201	204	206
R897	31	131	138	141	145	161	167	174	175	177	179	184	189	191	193	194	197	198	199	200	201	202	203	204
R898	1	12	19	46	73	98	107	123	127	139	146	153	155	157	160	165	171	173	175	176	185	187	192	195
R899	1	59	82	107	109	130	146	154	156	160	162	165	172	182	183	185	189	191	192	194	195	197	199	200
R900	11	120	137	169	172	176	179	186	190	196	197	200	204	208	209	214	215	216	217	220	223	228	232	234

Copyright © 2005 IEEE. All rights reserved.
This is an unapproved draft, subject to change

Table 55A–1—P matrix: location 1 to 24

	C1	C2	C3	C4	C5	C6	C7	C8	C9	C10	C11	C12	C13	C14	C15	C16	C17	C18	C19	C20	C21	C22	C23	C24
R901	1	25	66	98	102	107	123	164	175	176	182	185	186	188	189	193	194	196	197	200	201	203	204	206
R902	107	113	143	164	175	185	186	193	194	196	197	198	199	200	201	202	203	204	205	206	207	208	209	210
R903	1	35	56	89	93	98	103	107	108	129	157	159	160	162	167	168	177	178	180	184	188	189	190	192
R904	38	62	71	101	122	137	146	154	165	172	175	180	185	191	193	194	195	198	199	202	205	208	217	221
R905	1	10	78	98	107	120	155	163	169	179	182	189	194	195	197	200	201	204	206	207	208	209	210	211
R906	39	67	97	132	152	154	165	173	181	185	198	199	200	202	204	205	209	213	214	215	216	217	219	221
R907	1	9	22	76	107	112	122	138	143	146	154	165	174	175	177	182	185	187	189	191	194	197	200	201
R908	81	115	133	155	165	167	183	184	190	198	202	205	215	221	223	226	230	232	236	238	239	240	241	245
R909	42	92	108	141	144	160	161	167	179	184	185	188	192	194	195	197	198	200	201	202	204	205	206	207
R910	30	45	91	114	126	127	144	145	158	167	168	173	175	181	183	184	185	188	190	194	196	197	200	201
R911	1	43	98	107	126	171	181	182	187	188	189	192	193	194	195	197	198	200	201	202	203	204	205	206
R912	104	151	154	167	171	184	187	188	190	193	194	198	199	202	205	215	216	224	225	229	230	232	233	235
R913	1	20	36	98	107	117	138	139	140	150	155	157	158	160	161	164	165	174	176	182	186	190	192	194
R914	1	8	21	48	98	107	128	150	151	154	160	162	171	176	177	182	187	188	189	191	192	193	194	195
R915	58	90	162	164	186	197	198	199	200	201	202	203	204	205	206	207	208	209	210	211	212	214	217	219
R916	55	96	114	158	167	173	179	184	190	195	205	215	221	223	225	226	227	230	233	234	240	243	244	245
R917	72	89	102	105	112	118	163	177	181	189	191	195	198	199	203	214	217	220	221	226	231	235	240	244
R918	57	88	115	159	167	170	175	183	184	185	188	190	194	197	198	200	201	202	204	205	206	207	209	210
R919	7	40	118	135	148	154	162	163	177	183	184	185	189	191	195	197	199	201	203	204	207	209	211	213
R920	23	50	97	121	127	147	153	155	160	163	171	180	183	187	192	193	194	197	198	201	202	204	205	206
R921	1	32	63	91	98	107	113	164	171	172	180	182	186	187	189	193	196	198	199	202	204	205	208	209
R922	6	65	100	105	125	154	156	163	167	179	184	189	190	195	198	199	202	205	209	215	216	219	221	224
R923	5	53	75	101	112	160	166	175	185	193	194	195	197	198	199	200	201	204	206	207	209	210	211	212
R924	4	86	116	131	161	165	167	171	177	184	187	189	191	193	199	207	215	216	221	222	225	226	232	233
R925	1	3	51	77	98	99	107	110	154	157	166	167	173	174	177	178	182	184	188	189	190	191	194	195
R926	1	26	37	94	98	107	122	126	135	149	155	171	173	181	182	187	188	189	193	199	200	208	211	215
R927	168	214	220	221	235	245	251	253	257	261	262	263	267	268	269	271	275	280	282	289	292	294	295	296
R928	60	104	167	179	184	190	194	197	198	199	200	201	202	203	204	205	206	207	208	209	210	211	212	213
R929	70	105	111	124	136	154	203	215	220	224	229	235	243	244	248	251	252	253	254	259	260	264	266	268
R930	68	121	129	160	171	180	182	187	192	193	194	195	197	199	200	201	204	206	209	210	211	212	213	214
R931	1	74	98	99	107	128	158	166	182	189	195	198	199	202	203	205	220	223	226	229	230	233	234	235
R932	1	41	69	98	102	107	125	127	131	146	157	158	165	177	182	183	188	189	191	207	214	217	220	222
R933	24	98	111	142	152	159	163	166	169	174	190	193	195	205	217	220	222	223	225	230	231	232	233	237
R934	64	90	97	100	134	156	162	164	165	173	186	189	196	197	201	203	204	206	207	209	210	211	212	213
R935	18	122	125	144	154	168	187	193	198	199	202	208	217	224	229	231	232	235	237	239	240	241	242	247
R936	170	214	215	221	224	229	239	244	245	248	250	254	255	259	261	286	289	292	293	297	298	303	306	308
R937	1	79	98	107	127	129	171	183	187	189	190	193	207	208	220	223	225	229	236	242	243	244	245	246
R938	1	85	90	98	107	114	131	140	155	158	159	161	162	164	173	177	182	186	190	191	193	196	203	208
R939	1	83	98	99	107	124	138	158	166	182	189	195	198	199	202	205	209	214	217	226	231	232	233	234
R940	28	34	84	88	93	95	96	133	141	159	161	164	167	168	170	177	183	184	185	186	188	189	192	193
R941	1	17	33	52	80	91	94	98	107	114	117	136	141	143	154	158	161	162	165	170	171	172	175	179
R942	1	54	98	103	107	116	147	157	162	167	171	178	182	184	187	188	189	190	193	197	198	199	200	201
R943	117	147	163	165	185	195	216	221	230	238	240	244	250	254	255	259	260	261	264	267	268	269	270	271
R944	1	95	98	107	130	154	162	168	182	189	197	198	199	200	201	202	203	204	205	206	207	209	210	211
R945	17	114	139	157	158	160	170	173	175	182	185	188	192	193	195	198	199	202	203	205	208	209	214	215
R946	162	197	200	201	203	204	206	207	208	209	210	211	212	213	214	216	217	219	220	222	223	224	225	226
R947	50	113	121	147	163	164	180	186	196	213	216	217	223	224	231	232	233	234	235	238	239	241	245	246
R948	81	115	132	148	154	157	162	165	167	181	184	185	188	190	197	198	200	201	202	203	204	205	206	208
R949	61	95	100	141	156	161	162	168	174	179	185	190	197	200	201	203	204	205	206	207	208	209	210	211
R950	1	16	98	107	126	128	143	152	169	171	175	181	182	185	187	188	189	194	197	198	199	200	201	202
R951	1	29	56	69	89	98	103	107	131	158	162	168	171	177	178	182	183	184	187	191	193	197	198	199
R952	15	38	79	92	105	129	162	163	166	168	171	182	187	188	191	193	195	197	198	199	200	201	202	204
R953	94	130	154	162	173	195	197	200	201	204	206	207	209	210	211	212	213	214	217	219	220	221	222	225
R954	1	98	107	124	147	161	174	182	190	198	199	202	203	208	213	223	224	230	233	235	239	242	243	245
R955	14	34	95	106	142	162	168	189	196	197	200	201	203	204	206	207	209	210	211	212	219	220	221	222
R956	33	94	136	143	154	165	173	175	183	185	194	195	197	198	199	200	201	202	203	204	205	206	207	209
R957	13	27	55	96	151	167	171	179	186	189	190	195	196	205	215	221	226	231	232	236	241	243	245	249
R958	1	98	107	118	137	140	155	161	172	177	182	189	190	191	198	199	202	205	214	221	226	229	231	232
R959	1	12	48	87	98	106	107	123	146	149	154	162	165	171	176	182	187	189	193	197	198	199	201	202
R960	1	51	84	93	98	110	133	141	154	156	157	159	161	174	179	182	183	185	188	190	193	197	198	199

Copyright © 2005 IEEE. All rights reserved.
This is an unapproved draft, subject to change

Table 55A–1—P matrix: location 1 to 24

	C1	C2	C3	C4	C5	C6	C7	C8	C9	C10	C11	C12	C13	C14	C15	C16	C17	C18	C19	C20	C21	C22	C23	C24
R961	11	37	120	135	138	154	155	169	174	190	195	199	204	205	215	216	217	223	224	225	228	231	233	234
R962	1	46	54	70	98	107	111	124	139	147	153	155	157	160	163	171	187	188	189	192	193	194	197	198
R963	1	98	107	117	129	165	171	187	189	193	207	208	213	219	221	224	230	233	235	244	247	248	250	251
R964	1	93	98	107	153	155	159	164	171	177	182	186	187	189	191	196	197	198	199	200	201	202	204	205
R965	1	10	36	72	98	105	107	112	158	164	167	168	184	186	189	190	194	196	197	198	199	200	201	202
R966	1	21	57	75	98	107	128	159	160	166	182	183	189	192	193	194	195	197	199	200	201	202	204	205
R967	9	40	138	143	148	162	174	175	184	187	194	198	199	202	207	209	211	213	214	215	216	217	224	231
R968	1	23	58	97	98	107	127	155	160	174	182	183	189	190	192	195	198	200	202	203	213	215	216	218
R969	26	92	94	122	126	131	154	168	171	173	177	181	187	191	193	195	198	199	202	205	213	214	216	218
R970	68	91	160	163	171	187	192	193	194	198	202	203	205	208	216	221	224	225	230	233	234	235	238	239
R971	1	28	47	88	98	107	125	128	164	169	170	177	182	186	188	189	192	194	196	197	198	200	201	202
R972	83	99	108	125	138	160	166	167	174	184	190	191	192	194	197	199	200	201	203	204	205	206	207	208
R973	62	92	111	146	154	160	163	165	168	174	180	188	192	194	197	198	200	201	202	204	206	207	209	210
R974	1	52	98	107	120	145	162	167	169	172	175	179	182	184	185	189	190	193	194	197	200	201	203	204
R975	8	76	98	116	150	151	167	171	176	177	184	187	188	190	191	193	207	215	222	225	230	233	234	236
R976	90	133	144	160	162	164	168	183	185	186	192	194	195	196	198	202	203	205	208	214	216	217	221	223
R977	42	86	108	131	144	160	161	167	168	177	184	186	189	191	192	194	195	196	197	198	200	201	202	204
R978	30	49	77	93	99	114	119	127	144	155	158	159	165	166	167	168	173	177	183	184	190	191	193	195
R979	1	78	89	98	107	155	168	189	208	211	213	214	215	219	224	225	228	230	236	239	240	244	245	246
R980	19	80	88	91	117	141	161	165	170	171	173	179	185	187	190	193	197	200	201	203	206	207	208	210
R981	1	7	85	90	98	107	114	118	122	136	140	155	158	161	162	163	164	173	177	182	183	186	189	190
R982	1	71	98	107	110	122	137	154	157	172	174	182	188	189	197	198	199	200	201	202	203	204	206	207
R983	6	105	125	149	163	179	195	198	199	200	202	205	208	214	215	225	232	233	235	239	240	241	244	249
R984	1	39	98	103	107	157	162	165	168	169	171	173	178	182	185	187	188	189	193	197	200	201	203	204
R985	5	22	60	67	97	104	112	132	146	152	154	165	167	169	181	184	190	194	197	201	202	204	205	206
R986	1	4	73	98	107	116	127	165	167	175	178	182	183	184	185	189	190	193	194	197	200	201	203	204
R987	1	3	59	98	107	109	146	165	172	173	182	183	189	197	198	199	200	202	205	208	215	216	217	220
R988	65	154	201	203	204	206	207	208	209	210	211	212	213	214	215	216	217	219	222	223	225	226	227	228
R989	1	25	98	107	115	146	164	165	167	175	182	184	185	186	189	190	193	194	196	197	199	200	201	203
R990	1	98	107	112	181	182	189	200	202	203	215	216	217	226	229	230	231	233	238	239	240	244	245	246
R991	53	101	160	175	176	185	193	194	195	197	198	200	201	202	204	205	206	207	209	210	211	212	213	214
R992	1	66	98	102	107	123	135	154	176	182	188	189	198	202	205	215	223	224	226	228	230	231	232	233
R993	32	35	91	99	108	129	160	166	167	180	182	184	190	192	194	199	204	207	209	214	215	216	217	221
R994	1	43	74	98	101	107	126	158	160	171	175	181	182	185	187	188	189	192	199	203	213	223	225	226
R995	1	41	98	102	104	107	127	146	165	167	182	183	184	189	190	194	197	200	201	203	204	206	207	209
R996	24	150	152	159	169	176	188	190	193	203	207	208	223	225	232	233	236	243	246	251	252	257	260	262
R997	1	107	182	188	189	198	199	202	205	208	216	218	220	222	224	226	230	232	233	235	236	237	238	239
R998	1	20	97	98	107	117	119	134	138	150	155	170	173	174	176	177	178	182	188	189	191	200	203	205
R999	18	44	106	107	122	125	127	154	155	162	166	183	197	198	199	200	201	202	204	206	207	208	209	210
R1000	31	64	90	100	131	134	141	156	159	161	162	164	173	177	179	185	186	190	191	193	196	197	200	201
R1001	1	98	102	107	182	198	199	202	205	206	207	210	211	212	213	215	216	218	219	221	222	223	225	226
R1002	1	45	98	107	123	145	167	175	176	182	184	185	189	190	192	195	197	198	200	201	202	203	204	205
R1003	1	63	82	96	107	109	113	130	154	162	164	167	172	179	182	184	185	186	189	190	191	195	196	198
R1004	134	148	162	173	185	192	194	195	199	207	216	219	221	223	225	229	230	232	233	236	241	243	246	248
R1005	56	89	92	101	103	145	157	160	162	167	171	178	184	187	190	192	193	194	198	202	203	205	208	215
R1006	1	38	91	92	98	107	144	171	182	187	188	189	191	193	197	198	199	200	201	202	203	204	205	206
R1007	130	154	162	186	196	197	200	201	203	204	206	207	208	209	210	211	213	214	216	217	220	226	228	231
R1008	139	154	157	160	161	174	182	188	189	190	192	194	195	197	199	200	201	204	205	206	207	208	209	210
R1009	1	8	36	98	107	150	151	158	164	171	176	186	187	188	189	193	196	208	215	225	226	229	234	236
R1010	21	47	68	90	125	128	162	163	164	177	186	191	196	197	200	201	202	203	204	205	206	207	209	210
R1011	1	72	98	105	107	108	112	128	160	163	167	168	182	184	189	190	192	194	197	199	200	201	202	203
R1012	1	57	98	105	107	159	163	182	183	189	193	196	198	199	202	203	205	223	226	229	230	233	236	241
R1013	40	80	89	91	117	132	141	148	154	161	162	165	168	171	179	181	184	187	189	190	193	198	199	202
R1014	1	23	55	88	96	97	98	107	127	160	167	170	179	183	184	188	189	190	192	194	197	198	201	202
R1015	110	136	154	157	174	188	205	208	216	223	224	232	234	235	236	238	239	241	242	243	244	249	250	251
R1016	1	98	107	121	137	150	163	172	176	180	182	188	189	195	197	198	199	200	201	202	203	204	205	206
R1017	1	6	64	90	98	100	105	107	125	134	156	162	163	164	173	179	182	186	195	196	197	200	201	203
R1018	73	107	119	127	155	165	175	178	179	183	185	193	194	197	198	199	200	201	202	204	205	206	207	209
R1019	5	59	70	106	109	111	124	146	162	163	165	172	183	195	203	208	213	216	217	220	221	222	223	237
R1020	4	116	129	165	167	171	182	184	187	190	193	201	203	204	206	207	208	209	210	211	212	213	214	216

Copyright © 2005 IEEE. All rights reserved.
This is an unapproved draft, subject to change

Table 55A–1—P matrix: location 1 to 24

	C1	C2	C3	C4	C5	C6	C7	C8	C9	C10	C11	C12	C13	C14	C15	C16	C17	C18	C19	C20	C21	C22	C23	C24
R1021	3	25	60	104	147	164	167	173	175	184	185	186	190	193	196	201	203	204	206	207	208	209	210	211
R1022	1	98	107	127	182	183	189	198	199	202	205	208	216	220	223	229	233	236	238	240	243	247	248	252
R1023	1	27	58	98	107	159	171	175	182	184	185	187	189	193	194	197	200	201	204	206	207	209	210	211
R1024	1	51	98	107	110	154	157	158	174	177	182	188	189	191	202	208	217	223	224	226	230	231	232	233
R1025	37	50	75	121	135	147	154	155	163	166	177	180	191	199	203	208	213	214	215	216	219	223	225	226
R1026	1	98	99	100	107	156	166	182	194	195	197	200	201	204	206	207	209	210	211	212	213	214	216	217
R1027	26	94	114	122	126	134	142	154	158	171	173	181	187	188	193	195	213	217	218	220	221	223	224	225
R1028	44	102	107	148	155	162	165	166	180	185	197	200	201	204	206	209	210	211	212	213	214	217	221	224
R1029	1	31	61	71	98	107	122	131	137	141	154	161	162	172	174	177	179	182	185	187	190	191	193	198
R1030	1	29	39	65	97	98	107	154	165	169	173	182	183	185	198	199	200	202	205	215	219	224	233	235
R1031	18	22	41	102	112	122	125	127	154	183	198	199	203	205	214	217	220	221	223	224	226	229	230	231
R1032	1	24	98	107	112	149	152	159	169	182	189	190	193	198	199	200	208	214	215	216	217	221	226	229
R1033	1	43	82	107	126	130	154	162	168	171	181	182	185	187	188	189	191	193	197	199	200	201	203	204
R1034	87	104	106	149	162	164	167	184	186	190	194	196	198	199	200	202	205	213	216	224	229	230	232	235
R1035	1	96	98	107	113	138	164	167	173	174	179	182	184	186	189	190	191	195	196	198	199	202	208	209
R1036	17	46	62	92	114	139	146	153	155	157	158	165	168	170	171	173	180	181	182	187	193	199	214	215
R1037	1	86	98	107	120	123	131	161	169	176	177	179	182	190	191	198	199	202	205	220	221	222	223	229
R1038	77	99	109	135	154	166	167	172	178	184	190	195	197	199	200	201	204	206	207	209	210	211	212	213
R1039	1	98	107	151	157	171	182	187	188	189	193	198	199	202	205	208	211	213	215	216	219	221	224	226
R1040	32	91	95	140	155	161	168	171	180	187	189	190	193	204	208	209	217	223	225	226	230	231	232	233
R1041	16	48	128	153	154	155	171	187	188	190	193	219	220	223	224	226	229	230	235	239	240	242	243	244
R1042	20	117	131	138	150	165	172	174	176	177	184	188	191	197	200	201	203	204	205	206	207	208	210	211
R1043	1	15	84	93	98	105	107	133	141	159	161	162	163	167	169	177	179	182	183	184	185	191	193	195
R1044	1	28	88	94	98	107	125	164	170	173	178	182	186	188	189	191	192	194	196	197	198	200	201	202
R1045	54	111	147	163	174	195	205	209	213	214	216	220	221	223	224	227	229	231	232	236	237	239	241	243
R1046	14	74	106	117	158	162	165	189	197	200	201	203	204	206	207	209	210	211	212	213	214	217	219	220
R1047	1	78	85	90	98	107	114	115	140	158	161	162	164	167	173	182	184	186	193	196	199	215	221	223
R1048	13	81	115	165	167	184	186	189	190	196	199	200	204	208	209	214	217	228	231	234	235	238	239	240
R1049	122	141	154	161	179	185	189	190	208	216	221	224	225	226	229	230	232	233	235	236	238	240	241	245
R1050	12	123	126	146	165	171	176	181	187	188	193	198	199	202	206	207	210	211	212	215	216	218	219	222
R1051	1	53	79	98	101	103	107	129	156	157	160	162	175	178	185	188	189	193	194	195	198	199	202	203
R1052	1	11	63	98	107	113	120	164	169	179	182	186	189	190	196	198	199	202	204	205	209	221	226	229
R1053	67	97	124	132	152	154	169	174	181	198	199	200	202	203	208	209	214	215	219	221	223	224	226	227
R1054	1	34	83	95	98	99	107	138	166	168	174	182	189	195	198	199	202	203	208	209	216	221	223	226
R1055	33	93	94	136	143	152	154	159	169	173	175	177	185	189	191	194	195	198	199	202	203	205	208	221
R1056	1	45	52	69	98	107	131	145	157	158	162	167	172	175	177	182	184	185	188	189	190	191	194	208
R1057	1	10	98	107	116	163	166	167	176	182	184	189	190	194	195	197	200	201	204	206	208	209	210	211
R1058	49	66	93	102	119	123	155	159	165	176	177	178	185	188	191	193	197	200	201	202	203	204	205	206
R1059	9	138	143	146	165	174	175	185	187	194	197	198	199	200	201	202	203	204	206	207	208	210	211	212
R1060	1	44	61	98	152	155	162	166	169	174	182	189	197	198	199	200	201	202	204	206	207	208	209	210
R1061	31	69	139	141	158	160	161	179	182	185	189	190	192	194	195	197	199	200	201	204	206	207	208	209
R1062	1	8	50	72	98	105	107	112	121	147	150	151	168	171	176	180	182	187	188	189	193	198	199	203
R1063	27	57	90	159	162	164	169	183	184	186	193	196	197	198	199	200	201	202	204	205	206	207	208	209
R1064	40	100	125	148	156	162	184	185	189	197	198	199	200	201	202	203	204	205	206	208	209	210	212	215
R1065	23	97	111	127	160	163	174	183	191	192	194	197	198	201	202	204	206	207	209	210	211	212	213	214
R1066	62	81	89	92	115	146	160	167	180	184	188	190	192	194	195	197	198	199	200	201	202	204	205	206
R1067	1	58	88	98	105	107	120	141	151	161	163	169	170	171	182	185	187	188	190	193	195	198	199	202
R1068	7	118	126	140	155	161	163	171	177	180	181	183	187	188	190	191	193	195	197	198	199	200	201	202
R1069	1	48	71	85	90	98	107	114	122	137	140	155	158	161	162	164	172	173	182	186	190	196	197	200
R1070	6	39	105	125	163	165	169	171	173	179	185	187	193	195	198	199	202	205	208	214	223	225	226	230
R1071	1	22	51	98	107	110	112	146	154	157	165	170	173	174	177	182	188	189	191	202	203	215	216	224
R1072	5	37	103	127	135	154	155	157	162	171	178	183	187	188	193	195	197	199	200	201	203	204	206	207
R1073	1	4	65	98	107	116	123	154	159	165	167	176	182	184	189	190	193	198	199	202	203	205	207	215
R1074	1	3	98	107	109	158	172	173	182	189	197	198	199	200	202	205	208	215	216	220	221	223	228	229
R1075	73	112	127	175	183	185	193	194	196	198	199	203	208	217	223	226	230	231	232	234	241	246	247	249
R1076	36	59	109	146	158	164	165	172	182	183	186	196	197	198	200	201	202	203	204	205	206	207	208	209
R1077	21	55	64	90	96	100	128	134	156	160	162	164	167	173	174	179	184	186	189	190	192	194	196	198
R1078	1	25	84	93	98	107	118	133	141	159	161	164	175	179	182	183	186	189	190	194	196	198	199	202
R1079	1	47	54	98	107	125	147	148	162	177	182	185	189	191	195	197	200	201	203	204	206	208	210	211
R1080	61	99	108	117	160	162	165	166	167	174	184	192	194	198	202	213	215	221	223	229	230	234	239	240

Copyright © 2005 IEEE. All rights reserved.
This is an unapproved draft, subject to change

Table 55A–1—P matrix: location 1 to 24

	C1	C2	C3	C4	C5	C6	C7	C8	C9	C10	C11	C12	C13	C14	C15	C16	C17	C18	C19	C20	C21	C22	C23	C24
R1081	1	28	45	88	98	107	145	164	167	170	175	182	184	185	186	188	189	190	191	192	195	196	197	198
R1082	98	114	137	143	158	172	173	175	185	193	194	198	199	202	205	208	221	222	226	231	232	236	237	239
R1083	56	89	97	102	103	157	162	168	171	178	187	188	193	197	198	199	201	202	203	204	205	206	207	208
R1084	1	18	38	60	92	98	104	122	125	154	167	168	182	184	188	189	190	191	194	197	198	199	200	201
R1085	203	205	208	214	215	221	235	236	237	242	246	251	257	261	262	263	268	269	271	281	282	285	286	287
R1086	1	53	74	98	101	107	158	160	175	182	185	188	189	193	194	195	197	200	201	204	206	207	208	209
R1087	20	67	97	117	132	138	150	152	153	154	155	165	169	171	174	176	181	187	188	193	198	199	200	202
R1088	1	98	107	172	182	189	197	198	199	200	201	202	203	204	205	206	207	209	210	211	212	213	214	219
R1089	17	70	111	114	124	132	154	158	163	170	173	181	195	198	202	203	205	208	215	216	220	221	223	224
R1090	129	145	167	171	175	182	184	185	187	190	192	195	198	202	205	207	215	225	230	233	234	238	239	240
R1091	1	95	98	107	162	168	182	186	189	196	197	198	199	200	201	202	203	204	205	206	207	209	210	211
R1092	1	16	43	87	98	106	107	126	128	136	149	154	162	171	181	182	187	188	189	193	197	201	203	204
R1093	1	98	104	107	121	134	163	167	173	180	182	189	190	194	195	197	198	199	200	201	202	203	204	205
R1094	15	44	68	105	107	138	155	160	162	166	174	192	194	195	198	205	209	214	216	221	222	224	230	232
R1095	1	31	46	75	83	94	98	99	107	128	131	138	139	141	153	155	157	160	161	171	173	174	177	179
R1096	1	14	52	98	106	107	172	182	194	213	216	224	230	231	233	235	238	239	240	244	246	247	248	250
R1097	26	94	116	122	126	146	154	164	165	167	171	173	181	184	186	187	188	190	195	196	198	199	202	205
R1098	1	13	80	91	98	107	117	141	150	161	165	171	176	179	182	186	187	188	189	190	193	196	197	198
R1099	12	119	123	146	149	152	155	163	169	176	178	195	200	203	208	215	216	220	225	228	230	231	232	234
R1100	1	69	98	106	107	110	131	156	158	162	168	174	176	177	182	189	191	197	198	199	200	201	202	203
R1101	1	11	66	82	102	107	120	123	130	154	162	166	169	176	179	182	185	188	189	190	191	197	198	199
R1102	1	35	98	107	108	129	142	160	167	171	178	184	187	189	190	192	193	194	195	197	198	200	201	202
R1103	93	101	113	159	160	164	165	175	177	185	186	191	192	196	197	199	200	201	203	204	208	209	214	215
R1104	187	193	245	259	264	265	266	267	273	275	277	280	281	285	289	290	291	293	299	303	305	306	309	310
R1105	10	63	76	79	98	113	115	129	163	164	167	171	177	182	184	186	187	190	191	193	194	195	196	197
R1106	1	98	107	133	182	183	189	200	208	209	213	214	215	221	223	224	226	230	233	239	240	243	244	245
R1107	9	42	78	108	124	138	143	144	155	160	167	168	175	184	185	187	190	192	195	199	209	215	216	217
R1108	30	34	95	114	127	144	155	158	173	181	183	196	198	199	202	204	205	209	216	221	230	232	234	236
R1109	1	29	64	90	98	100	107	134	156	164	166	173	182	183	186	189	196	198	199	202	203	205	217	219
R1110	1	41	91	98	102	107	127	135	146	154	165	171	182	183	187	189	193	197	198	200	201	202	203	204
R1111	1	98	99	107	166	182	189	195	198	199	202	203	205	217	226	229	231	232	233	236	240	241	243	246
R1112	32	77	91	99	161	166	167	171	178	180	184	187	189	193	195	197	200	201	206	207	208	210	211	213
R1113	1	58	76	107	177	182	189	191	198	199	202	205	208	213	215	216	222	224	226	230	232	233	235	236
R1114	1	98	107	133	171	179	182	183	187	189	193	208	221	223	226	229	230	233	240	242	243	245	247	248
R1115	1	10	65	98	107	119	139	154	155	157	160	163	165	178	181	188	189	192	198	202	205	208	219	221
R1116	1	9	98	107	112	135	138	143	154	171	174	175	177	182	185	189	191	193	194	197	199	200	201	202
R1117	51	79	110	129	154	155	157	171	174	177	182	187	188	191	193	199	205	207	216	220	223	224	225	229
R1118	1	32	37	91	92	98	107	135	154	155	168	171	180	182	187	188	189	193	195	197	198	200	201	202
R1119	91	114	124	158	171	173	174	187	193	197	200	201	204	205	206	207	209	210	211	212	213	214	217	219
R1120	1	34	74	95	98	102	107	152	158	164	168	169	182	186	189	196	198	199	202	205	208	214	220	221
R1121	33	69	94	131	136	143	154	157	158	173	175	177	180	185	188	191	193	194	195	197	198	199	200	201
R1122	71	84	93	122	133	137	141	159	161	166	172	177	179	183	185	189	190	191	193	198	199	202	205	216
R1123	8	39	54	73	127	147	150	151	165	169	171	173	175	176	183	187	188	194	197	198	199	200	201	202
R1124	22	59	90	109	112	117	162	164	165	172	183	186	196	198	199	203	208	213	217	221	223	224	229	230
R1125	1	87	98	106	107	149	162	170	182	197	198	199	202	205	213	215	220	224	228	233	234	235	236	238
R1126	1	25	45	98	107	127	145	164	167	182	183	184	186	189	190	193	196	197	198	199	200	201	202	203
R1127	1	89	98	107	138	149	159	168	174	182	189	193	198	199	200	202	203	209	215	223	226	230	232	233
R1128	46	67	88	97	132	139	152	153	154	155	157	158	160	168	169	170	171	179	181	182	187	192	193	194
R1129	1	7	70	98	107	111	118	124	177	182	183	191	198	199	202	203	205	208	214	216	220	221	223	229
R1130	1	83	98	99	107	129	138	147	166	171	174	187	189	193	195	203	205	207	208	209	213	214	216	223
R1131	1	6	52	78	98	105	107	125	155	162	163	172	179	182	189	195	214	216	217	225	226	228	229	230
R1132	27	116	167	182	190	198	199	202	204	205	207	208	209	214	215	217	221	228	230	231	232	235	236	241
R1133	5	122	154	185	222	237	242	246	261	264	266	268	269	270	271	272	274	276	278	281	282	283	284	285
R1134	1	4	76	107	116	136	154	165	167	177	182	183	184	189	190	191	198	199	202	205	207	221	222	223
R1135	3	105	121	133	173	180	183	198	199	201	202	203	204	205	206	207	208	209	210	211	212	213	214	215
R1136	1	42	72	98	105	107	108	112	137	144	160	163	167	172	182	184	189	190	192	194	199	202	205	215
R1137	1	30	57	98	107	114	127	144	158	159	168	173	182	189	193	196	198	199	202	203	210	212	217	218
R1138	1	40	53	98	101	146	148	160	162	165	175	182	184	189	193	194	195	202	203	205	207	211	213	215
R1139	1	23	75	97	98	107	127	160	166	175	182	183	185	189	192	193	195	198	200	202	205	214	215	216
R1140	50	121	143	147	163	175	180	185	193	195	213	216	224	230	235	238	240	244	245	250	251	255	257	259

Copyright © 2005 IEEE. All rights reserved.
This is an unapproved draft, subject to change

Table 55A–1—P matrix: location 1 to 24

	C1	C2	C3	C4	C5	C6	C7	C8	C9	C10	C11	C12	C13	C14	C15	C16	C17	C18	C19	C20	C21	C22	C23	C24
R1141	1	26	56	89	94	98	99	103	107	122	126	154	157	162	166	168	173	178	181	182	189	197	200	201
R1142	38	92	100	156	168	169	188	189	191	208	214	219	221	230	239	240	244	251	252	253	260	261	265	267
R1143	125	188	198	199	202	203	205	214	216	219	221	225	226	230	232	233	235	238	241	244	245	246	250	251
R1144	20	111	117	138	150	163	165	176	188	195	207	209	213	214	220	223	224	232	235	239	241	243	244	248
R1145	1	41	102	107	127	146	148	162	165	182	183	185	189	198	199	202	205	207	208	217	219	220	221	222
R1146	24	36	61	97	152	158	159	162	164	169	174	182	186	190	193	196	197	198	199	201	202	204	206	207
R1147	18	21	49	93	119	122	125	128	154	155	159	160	165	177	178	190	191	192	193	194	195	196	199	203
R1148	1	29	98	107	131	177	182	183	191	198	199	202	205	214	221	222	223	229	235	236	237	240	242	243
R1149	1	19	55	81	96	98	107	115	144	165	168	173	179	182	188	195	198	202	214	216	217	223	225	229
R1150	1	28	88	98	107	118	141	161	164	170	177	179	182	185	186	188	189	190	192	194	195	196	197	199
R1151	126	153	155	181	188	195	198	199	202	205	213	216	217	223	224	229	231	235	236	238	240	243	244	245
R1152	96	132	151	154	167	171	172	179	181	184	187	190	193	195	197	198	199	200	201	202	203	204	205	206
R1153	1	17	98	107	114	140	155	158	161	167	170	173	176	182	184	197	198	200	201	202	203	204	205	206
R1154	48	66	102	123	154	176	188	206	207	210	211	212	213	215	216	218	220	221	222	224	227	228	229	232
R1155	1	35	63	98	107	108	113	129	157	160	164	167	171	173	184	186	187	188	189	190	192	193	194	195
R1156	95	101	134	160	168	173	175	185	192	193	198	202	203	205	208	209	216	221	223	224	226	232	235	236
R1157	1	16	44	98	123	128	155	166	176	182	189	198	199	202	203	205	216	222	223	226	231	236	237	238
R1158	31	109	131	141	161	172	177	179	184	185	189	190	197	200	201	203	204	206	207	209	210	211	212	213
R1159	1	15	43	62	92	98	105	107	126	142	146	160	162	163	165	168	171	174	180	181	182	187	189	192
R1160	85	90	94	104	114	120	140	155	158	161	162	164	165	167	169	179	184	186	189	194	195	196	197	200
R1161	187	193	245	259	264	265	266	268	269	271	273	277	279	286	289	306	308	313	315	316	317	318	322	324
R1162	14	47	106	125	162	177	189	191	195	197	198	199	200	201	202	203	204	205	206	207	208	209	210	211
R1163	64	90	100	108	130	134	154	156	160	164	167	173	178	184	186	189	190	192	193	194	195	196	197	198
R1164	1	13	82	103	107	130	154	157	161	171	178	182	185	186	187	188	189	190	191	193	196	198	199	202
R1165	42	51	70	108	110	111	124	144	154	157	160	163	167	168	174	177	184	188	190	191	192	194	197	199
R1166	30	37	98	114	127	129	135	144	146	154	155	158	165	168	171	173	182	183	187	193	195	196	198	202
R1167	1	68	97	98	107	160	163	182	189	192	194	197	199	201	204	206	207	208	209	210	211	212	213	214
R1168	18	122	125	128	149	154	198	199	200	202	208	214	215	220	221	224	229	239	240	245	248	250	253	261
R1169	72	85	90	105	112	114	140	155	158	161	162	163	164	168	173	186	189	190	195	196	198	199	203	214
R1170	1	43	57	79	98	107	126	129	159	181	183	188	189	193	198	199	202	203	205	207	213	220	223	224
R1171	13	76	98	109	167	172	177	184	186	189	190	191	196	197	200	201	203	204	206	207	209	210	211	212
R1172	86	131	133	161	169	177	183	189	190	191	198	199	202	205	208	222	223	225	226	230	233	237	242	243
R1173	12	42	77	99	108	123	125	144	146	160	165	166	168	176	178	192	194	197	199	200	201	203	204	206
R1174	30	111	114	127	144	156	158	163	168	173	174	183	195	196	205	211	213	215	219	220	223	224	225	226
R1175	1	11	58	98	107	120	169	179	182	189	190	198	199	202	204	205	208	209	213	214	216	217	224	226
R1176	1	41	67	97	98	102	107	127	132	146	152	154	165	169	181	182	183	200	215	217	219	220	223	224
R1177	24	45	65	93	145	152	154	167	169	175	177	184	185	191	194	196	197	198	199	200	201	202	203	204
R1178	1	10	55	96	98	107	112	150	163	167	176	179	182	184	188	189	190	194	197	200	201	202	204	206
R1179	87	106	118	143	149	162	175	177	185	189	191	193	194	198	200	202	205	208	214	215	216	221	223	226
R1180	9	56	89	103	119	138	143	155	157	162	165	168	171	174	175	176	185	188	193	194	198	199	202	203
R1181	38	66	92	102	106	123	138	155	162	168	174	176	191	197	200	201	203	204	205	206	207	208	210	211
R1182	1	46	92	98	107	139	148	153	155	157	160	162	168	171	182	185	187	189	192	193	194	195	199	207
R1183	1	35	61	91	98	107	108	129	151	160	162	167	171	174	184	187	189	190	192	193	194	195	197	198
R1184	1	98	101	107	136	140	154	155	160	161	175	182	185	190	192	193	197	198	200	201	202	204	205	206
R1185	29	48	121	149	154	163	180	183	189	195	200	208	212	215	216	219	222	223	224	225	227	228	231	232
R1186	154	168	170	214	215	221	224	229	239	244	245	250	252	255	259	260	264	265	270	272	274	276	278	281
R1187	1	8	80	91	98	107	117	141	150	151	159	161	165	176	179	182	185	188	190	193	197	198	199	200
R1188	1	90	98	107	137	158	162	164	172	180	182	186	188	189	196	216	223	226	229	231	233	237	243	246
R1189	20	71	117	122	137	138	150	154	163	165	172	174	176	188	195	197	200	201	203	204	205	206	207	211
R1190	107	110	152	157	169	171	174	187	188	193	205	216	222	223	229	232	233	234	236	237	238	241	248	249
R1191	1	39	51	69	89	98	107	110	131	154	158	165	168	169	173	174	182	185	189	205	208	214	221	222
R1192	1	22	37	68	88	98	107	112	135	146	154	155	160	163	165	166	170	182	188	189	192	194	195	197
R1193	1	7	98	107	118	128	144	163	168	177	182	183	191	195	198	199	202	205	217	220	223	229	230	231
R1194	1	6	49	93	98	105	107	119	125	155	159	163	165	177	178	179	182	189	193	195	197	200	201	202
R1195	62	92	105	146	147	160	163	165	168	180	188	192	194	197	198	200	201	202	204	205	206	207	209	210
R1196	1	5	19	98	107	120	169	173	178	179	182	188	198	199	202	205	222	224	226	235	236	237	240	242
R1197	1	4	98	107	116	164	165	167	182	184	186	189	190	196	198	199	202	205	207	208	215	216	217	221
R1198	1	3	27	73	98	107	127	173	175	182	183	184	185	189	193	194	197	200	215	216	219	220	221	225
R1199	1	59	98	107	109	115	146	165	167	172	182	183	184	189	190	197	198	200	201	202	203	204	205	209
R1200	25	36	63	113	158	164	175	182	185	186	193	194	195	196	197	200	201	203	204	206	207	208	209	210

Copyright © 2005 IEEE. All rights reserved.
This is an unapproved draft, subject to change

Table 55A–1—P matrix: location 1 to 24

	C1	C2	C3	C4	C5	C6	C7	C8	C9	C10	C11	C12	C13	C14	C15	C16	C17	C18	C19	C20	C21	C22	C23	C24
R1201	21	128	132	154	160	181	192	194	195	197	199	200	201	202	204	205	206	207	210	211	212	213	216	219
R1202	181	190	198	199	202	205	216	225	230	232	233	238	241	246	253	267	270	271	273	275	277	289	290	291
R1203	1	43	84	93	98	107	126	131	133	141	159	161	171	179	181	182	183	185	187	188	190	197	198	199
R1204	1	82	99	104	107	130	135	162	166	167	182	184	185	189	190	191	194	195	199	203	222	228	229	233
R1205	28	54	88	147	164	170	186	188	191	192	194	195	196	197	198	200	201	202	203	204	205	206	207	208
R1206	1	32	91	98	107	117	145	165	167	171	175	180	182	184	185	187	189	190	194	204	208	209	213	214
R1207	1	72	79	98	105	107	112	113	129	163	164	168	171	186	187	189	193	195	196	202	203	205	214	216
R1208	57	83	98	99	138	159	160	166	174	183	192	193	194	197	198	200	201	202	204	206	207	208	210	211
R1209	40	97	124	148	162	174	175	184	186	193	194	196	198	199	200	202	203	207	208	211	213	219	221	223
R1210	1	18	23	34	52	95	97	98	107	122	125	127	154	160	162	168	172	182	183	189	200	203	205	208
R1211	33	50	94	116	121	136	143	147	154	163	167	173	175	179	180	184	185	190	193	194	197	198	199	200
R1212	70	111	124	139	157	160	163	182	185	188	192	194	197	199	200	201	203	204	206	207	208	209	210	211
R1213	1	98	100	107	129	142	156	162	171	187	193	197	200	201	203	204	206	208	209	210	211	212	213	214
R1214	1	64	90	96	98	100	107	134	156	162	164	167	173	179	182	184	186	187	190	193	195	196	197	198
R1215	1	17	74	98	107	114	170	173	177	182	189	191	198	202	205	208	215	221	229	233	235	236	239	247
R1216	1	53	98	101	107	114	157	158	160	173	175	182	185	188	189	193	194	195	197	200	201	204	206	207
R1217	1	95	98	102	107	168	182	189	198	199	214	216	220	221	226	229	230	232	233	234	235	238	241	243
R1218	16	47	75	125	128	130	154	162	166	177	191	195	197	198	199	200	201	202	204	205	206	207	208	209
R1219	40	104	148	162	167	181	185	190	194	207	211	213	217	221	224	229	230	231	232	234	235	238	239	240
R1220	23	96	97	124	127	160	167	174	179	184	190	192	194	197	198	201	202	203	204	206	207	208	209	210
R1221	1	17	34	95	98	103	107	114	135	154	157	158	162	168	170	171	173	178	182	187	188	189	193	197
R1222	1	33	94	98	107	136	137	143	154	172	173	174	175	182	185	189	191	193	194	195	205	208	221	223
R1223	1	32	62	91	92	98	107	146	160	165	168	171	182	187	188	189	192	193	194	195	199	203	204	209
R1224	1	98	120	157	169	179	182	188	189	198	199	202	208	221	222	226	237	240	242	243	245	247	249	251
R1225	47	53	95	101	125	147	160	168	175	177	185	191	193	194	196	197	200	201	204	206	207	208	209	210
R1226	55	96	99	120	166	167	169	171	184	187	190	193	203	205	208	215	216	230	231	236	240	244	247	249
R1227	51	73	110	118	127	154	157	174	175	183	185	188	189	193	194	197	200	201	203	204	205	206	207	209
R1228	1	37	59	80	91	98	107	109	117	135	141	146	154	155	161	171	172	179	182	183	185	187	190	193
R1229	1	58	98	107	182	189	198	199	201	202	203	204	205	206	209	210	211	212	214	215	217	219	222	223
R1230	25	98	163	164	175	185	186	193	194	195	196	197	198	199	200	201	202	203	204	206	207	208	209	210
R1231	1	53	97	98	101	107	110	157	160	174	175	182	185	188	189	193	194	195	197	201	204	205	206	207
R1232	1	18	78	98	107	122	125	154	155	164	182	186	189	196	205	208	214	221	224	226	228	233	234	236
R1233	1	98	107	143	175	182	185	189	193	194	197	200	201	203	206	207	210	211	212	213	214	216	219	220
R1234	1	56	65	89	98	103	107	122	157	162	168	171	178	182	187	188	189	193	197	198	199	200	201	202
R1235	1	38	92	98	107	147	168	174	182	188	189	191	198	199	202	208	213	214	221	223	224	226	230	233
R1236	75	96	166	167	178	179	184	190	195	199	203	208	214	215	217	219	223	226	230	231	232	233	235	238
R1237	17	27	47	114	125	152	158	169	170	173	177	184	191	195	198	202	205	213	214	215	223	224	225	226
R1238	1	69	79	98	107	108	129	131	157	158	160	167	171	177	184	187	188	189	190	191	192	193	195	199
R1239	1	26	94	98	107	115	122	126	154	166	167	171	173	181	182	184	187	188	189	190	193	195	199	203
R1240	85	90	114	124	140	146	155	157	158	161	162	164	165	173	174	186	188	189	190	196	198	199	200	202
R1241	1	16	33	64	90	94	98	100	107	128	134	136	143	154	156	162	164	182	186	195	196	197	198	199
R1242	15	50	103	105	121	147	157	171	178	180	187	188	193	213	216	223	224	225	228	232	235	236	238	239
R1243	100	132	154	156	181	189	198	199	202	205	208	219	224	225	227	229	230	231	232	233	235	238	239	241
R1244	14	105	106	123	162	163	176	189	195	197	198	199	200	201	202	203	204	205	206	207	209	210	211	212
R1245	60	104	109	151	167	171	172	184	187	190	194	198	199	202	205	215	216	225	227	230	232	233	238	239
R1246	13	140	155	161	183	186	190	196	197	200	201	203	204	206	207	208	209	210	211	212	213	214	215	216
R1247	1	43	48	98	107	126	154	171	181	182	187	188	189	193	208	213	219	229	232	233	239	241	245	247
R1248	12	104	123	137	146	165	167	172	176	184	190	194	198	199	202	205	208	215	220	221	223	228	230	234
R1249	86	131	145	156	161	167	175	177	184	185	189	191	193	194	197	198	199	200	201	202	203	204	205	206
R1250	11	41	77	99	102	107	120	127	146	165	166	167	169	178	179	183	184	195	203	204	208	209	214	215
R1251	24	152	159	160	169	190	192	193	194	195	197	198	200	201	202	203	204	205	206	207	208	209	210	212
R1252	170	179	186	196	197	200	201	203	204	206	207	208	209	210	211	212	213	214	215	216	217	219	220	221
R1253	36	70	93	111	124	127	158	159	163	164	177	181	182	183	186	191	193	195	196	197	200	201	203	204
R1254	1	21	98	107	128	129	159	160	171	187	189	192	194	195	197	198	200	201	203	204	206	209	210	211
R1255	1	10	98	107	135	144	154	158	163	168	182	189	192	198	199	202	205	208	214	215	216	217	219	221
R1256	9	32	91	138	139	143	157	160	171	174	175	180	182	185	188	192	193	195	197	198	200	201	202	206
R1257	149	155	162	197	201	203	204	208	209	214	217	218	221	224	228	229	231	232	234	238	241	243	244	246
R1258	20	63	91	113	117	138	150	164	165	171	174	176	186	187	188	193	196	197	200	201	203	204	205	206
R1259	1	49	76	93	107	119	155	159	165	176	178	182	189	193	197	198	199	200	201	203	204	206	207	210
R1260	1	66	98	102	107	123	133	176	182	183	188	189	208	212	216	222	223	226	227	228	229	230	232	233

Copyright © 2005 IEEE. All rights reserved.
This is an unapproved draft, subject to change

Table 55A–1—P matrix: location 1 to 24

	C1	C2	C3	C4	C5	C6	C7	C8	C9	C10	C11	C12	C13	C14	C15	C16	C17	C18	C19	C20	C21	C22	C23	C24
R1261	19	42	67	87	97	106	108	132	144	149	152	160	162	167	168	169	173	181	184	188	189	190	192	194
R1262	1	30	35	98	107	108	114	127	129	144	158	160	167	168	171	173	183	184	187	189	190	192	193	194
R1263	8	101	138	150	151	160	169	171	174	175	176	185	187	188	192	199	203	205	208	209	214	215	221	223
R1264	1	46	72	90	98	105	107	112	125	139	153	155	157	160	162	163	164	168	171	186	187	188	189	192
R1265	57	68	84	93	111	133	141	160	161	174	177	179	185	189	190	191	192	194	195	199	203	205	216	220
R1266	40	128	148	162	177	184	185	191	197	200	201	203	204	206	208	209	210	212	214	215	216	217	219	221
R1267	1	23	54	89	97	98	107	127	147	160	168	180	182	183	189	192	194	195	197	199	201	204	206	207
R1268	71	88	117	122	137	154	165	170	172	188	197	200	201	203	204	206	207	209	210	211	212	214	215	217
R1269	1	7	81	98	107	114	115	118	150	158	163	165	167	173	176	177	182	183	184	188	190	191	195	198
R1270	1	39	98	102	107	141	161	165	169	173	179	190	220	221	223	226	230	233	240	243	244	252	253	254
R1271	22	112	119	126	146	155	171	178	181	187	188	193	198	199	213	216	223	224	225	229	232	235	236	238
R1272	1	6	98	105	106	107	125	136	154	162	163	179	182	189	190	195	197	200	201	203	204	206	207	209
R1273	1	83	98	99	107	121	131	138	142	163	166	174	177	180	182	189	191	198	199	202	203	208	209	214
R1274	5	165	221	222	224	229	235	244	245	248	250	251	252	254	255	259	265	266	267	268	269	271	275	279
R1275	4	28	52	74	82	88	98	116	130	154	158	164	165	167	170	172	184	185	186	187	188	190	192	193
R1276	1	3	98	107	116	167	173	182	184	189	190	198	199	201	202	203	204	205	206	209	210	211	212	213
R1277	1	16	98	107	108	128	160	167	176	182	184	189	190	192	194	195	197	199	200	201	204	206	207	209
R1278	55	66	96	102	123	167	176	179	188	190	195	205	215	216	217	221	223	225	231	233	238	239	244	245
R1279	1	35	60	81	94	98	104	107	108	115	129	160	165	167	171	173	184	187	189	190	192	193	203	207
R1280	1	63	98	101	107	113	141	160	161	164	175	179	182	186	190	192	193	196	198	202	203	205	208	214
R1281	1	14	98	106	107	126	162	171	181	182	187	188	193	197	200	201	203	204	206	207	208	210	211	212
R1282	1	82	107	130	143	154	162	175	182	189	191	194	208	222	223	224	230	233	234	235	237	238	240	242
R1283	1	13	56	89	98	103	107	157	162	168	171	182	186	187	188	193	196	197	198	199	200	201	202	203
R1284	1	88	98	107	126	170	171	181	182	186	187	189	193	196	208	213	215	217	224	225	226	235	236	239
R1285	7	58	118	146	163	165	183	189	195	208	213	214	216	217	223	224	226	229	231	232	238	239	241	243
R1286	1	6	98	105	107	114	125	158	163	173	176	179	182	189	195	214	221	225	229	232	234	235	236	241
R1287	1	5	20	98	107	109	117	138	150	165	171	172	174	176	182	187	188	189	193	197	198	199	200	201
R1288	1	4	35	51	75	98	107	108	110	116	129	154	157	160	165	166	171	174	177	187	188	189	191	192
R1289	3	37	79	101	129	135	143	154	155	160	171	173	182	187	192	193	194	195	197	200	203	207	208	216
R1290	1	56	80	89	91	98	103	107	117	141	157	161	162	165	168	178	179	182	185	188	190	194	197	200
R1291	1	26	38	92	94	98	107	122	124	126	154	168	171	173	174	179	181	182	187	189	191	193	195	203
R1292	34	70	95	111	124	168	214	220	221	235	244	245	247	251	257	261	262	263	264	265	266	270	272	273
R1293	1	33	76	94	107	110	129	136	143	154	157	171	173	174	175	177	185	187	188	189	191	194	195	197
R1294	42	60	83	99	104	108	138	144	160	166	168	174	192	199	205	208	209	217	221	223	224	227	230	234
R1295	1	30	98	99	107	114	127	137	144	158	166	168	172	173	182	183	189	192	194	196	199	203	208	215
R1296	1	52	98	107	162	172	180	182	189	198	199	202	205	208	210	212	216	218	220	222	224	226	227	228
R1297	1	71	98	116	122	137	139	154	157	160	167	172	184	188	189	190	192	194	195	198	202	203	205	207
R1298	39	61	84	93	98	133	141	159	161	162	165	169	173	174	177	179	183	189	190	191	193	198	199	202
R1299	1	22	85	90	97	98	107	112	114	140	146	155	158	161	162	164	165	173	182	186	190	196	197	201
R1300	1	18	29	36	54	82	107	122	125	130	147	158	162	164	183	185	186	191	196	197	198	199	200	201
R1301	21	117	128	160	165	192	194	195	197	198	200	201	204	206	207	209	210	211	212	217	219	222	223	224
R1302	103	113	132	149	154	157	162	164	171	178	181	186	187	188	193	196	197	198	199	201	202	203	204	205
R1303	74	96	158	167	179	184	190	195	215	221	223	224	225	229	230	233	234	236	238	239	240	243	245	246
R1304	17	64	90	100	114	134	156	158	162	164	170	186	189	196	197	199	200	201	203	204	206	207	209	210
R1305	1	98	107	150	157	176	182	198	199	202	205	223	229	230	233	236	242	243	244	245	246	248	250	252
R1306	1	45	78	95	98	105	107	145	155	163	167	168	175	178	182	184	185	189	190	194	195	208	214	215
R1307	16	119	128	155	165	178	203	204	208	209	214	216	217	220	223	227	232	233	235	239	241	242	243	245
R1308	1	98	106	107	122	152	154	162	169	182	184	189	197	198	199	200	201	202	203	204	205	206	207	209
R1309	1	15	69	98	105	107	115	130	131	154	157	158	163	167	177	182	184	188	189	190	191	195	198	202
R1310	1	65	94	98	107	154	161	166	173	182	190	195	198	199	200	202	203	205	208	215	216	221	223	224
R1311	1	14	98	106	107	112	131	151	162	171	177	182	187	193	197	198	199	200	201	204	206	207	209	210
R1312	62	92	140	146	155	160	161	165	168	180	188	189	190	192	193	194	195	198	199	202	203	205	214	216
R1313	1	13	28	48	88	98	107	120	154	164	169	170	179	182	188	191	192	194	195	196	197	199	200	201
R1314	12	43	55	67	96	97	123	126	132	146	152	154	165	167	169	171	176	179	184	187	188	190	193	195
R1315	68	104	118	156	160	163	167	177	184	189	190	191	192	199	203	214	215	216	221	224	226	232	234	245
R1316	11	120	128	169	170	179	190	204	209	214	215	217	220	231	232	235	237	239	241	242	246	247	248	249
R1317	86	127	131	161	177	183	189	190	191	205	208	216	222	223	232	236	237	238	241	242	243	246	247	252
R1318	53	77	99	101	159	160	166	167	175	178	184	185	190	194	197	198	199	200	201	202	204	205	206	207
R1319	1	93	98	107	158	159	177	182	189	191	193	197	198	199	200	201	202	204	205	206	207	209	210	212
R1320	134	169	173	174	198	199	202	216	221	225	226	230	232	233	236	238	241	242	253	254	263	267	270	271

Copyright © 2005 IEEE. All rights reserved.
This is an unapproved draft, subject to change

Table 55A–1—P matrix: location 1 to 24

	C1	C2	C3	C4	C5	C6	C7	C8	C9	C10	C11	C12	C13	C14	C15	C16	C17	C18	C19	C20	C21	C22	C23	C24
R1321	10	44	107	125	155	163	166	194	195	197	200	201	204	206	207	208	209	210	211	212	213	217	220	221
R1322	1	31	73	98	107	111	127	131	141	161	163	174	175	177	179	183	190	191	193	194	195	197	198	199
R1323	9	47	59	109	125	138	143	146	165	172	174	175	177	183	185	187	191	194	195	205	208	209	213	216
R1324	108	136	147	154	155	160	167	184	190	192	194	195	197	198	200	202	203	205	213	216	220	224	228	230
R1325	1	25	72	87	92	98	105	106	107	112	121	149	162	164	175	180	182	185	186	188	189	193	194	196
R1326	57	91	153	155	159	183	193	197	200	201	204	206	207	209	210	211	212	213	214	219	220	222	223	224
R1327	1	27	40	98	107	138	148	162	172	174	182	185	189	198	199	202	207	209	211	213	214	215	223	224
R1328	23	46	97	127	139	142	153	155	157	167	171	182	183	184	187	188	190	193	198	199	200	202	205	212
R1329	154	165	221	224	229	244	248	250	254	259	260	265	269	270	271	272	274	276	278	279	281	283	284	285
R1330	38	92	105	163	168	188	191	195	214	221	227	231	238	247	248	251	252	253	257	259	260	261	262	263
R1331	12	84	93	113	123	133	141	146	159	161	164	165	176	177	179	183	185	186	189	190	191	193	196	197
R1332	87	106	115	149	156	162	167	184	190	197	199	201	203	204	206	207	208	209	210	211	212	214	216	217
R1333	11	54	120	147	169	179	188	190	200	204	213	215	216	217	221	224	229	230	231	235	237	238	240	242
R1334	1	47	98	107	125	136	144	154	168	177	180	182	189	191	195	208	213	217	223	226	229	230	231	232
R1335	1	71	93	98	107	108	121	122	137	154	159	160	163	167	172	177	180	182	184	189	190	191	192	193
R1336	65	99	103	115	154	157	162	166	167	171	178	184	187	188	190	193	195	197	199	200	201	204	206	207
R1337	57	145	159	167	175	183	184	185	190	194	197	198	200	201	202	204	205	206	209	210	211	212	213	214
R1338	40	98	148	162	170	184	185	197	200	201	203	204	206	208	209	210	212	214	216	217	219	220	221	223
R1339	1	18	76	107	122	125	134	154	159	173	177	182	186	189	191	193	196	198	199	202	203	208	214	215
R1340	1	44	98	133	142	155	158	166	182	183	189	203	214	217	221	222	223	226	230	231	232	234	235	237
R1341	1	31	42	98	107	108	131	141	144	160	161	165	167	168	171	177	179	182	184	185	187	191	193	198
R1342	30	51	110	114	127	144	154	157	158	168	173	174	177	182	183	187	188	191	193	196	205	217	221	223
R1343	37	135	139	154	155	157	160	173	182	188	192	194	197	200	201	204	206	207	209	210	211	212	213	214
R1344	1	96	98	107	136	154	162	167	179	182	184	189	190	195	197	198	199	200	201	202	203	204	205	206
R1345	17	114	121	123	158	163	170	173	176	180	183	191	195	199	215	216	220	221	226	229	230	231	232	238
R1346	62	92	109	146	160	165	168	172	180	188	192	194	195	198	202	203	205	208	214	216	217	223	224	232
R1347	67	97	120	132	137	152	154	172	179	181	197	198	199	201	202	203	204	205	206	207	209	210	211	212
R1348	153	155	157	171	187	188	193	210	212	218	220	222	224	225	227	228	229	231	233	234	235	236	238	241
R1349	49	93	95	107	119	155	159	165	168	172	177	178	191	193	202	205	214	216	222	223	229	231	232	235
R1350	16	128	151	167	171	184	187	190	193	198	199	202	205	215	216	220	225	232	233	239	240	241	242	243
R1351	1	19	60	98	104	107	140	155	161	167	173	182	188	189	194	196	208	215	221	223	227	229	230	231
R1352	15	48	83	99	105	138	154	162	163	166	174	197	200	201	204	205	206	207	208	210	211	212	213	215
R1353	1	55	94	96	98	107	167	173	179	182	184	189	190	198	199	205	208	215	216	223	225	229	231	232
R1354	52	75	118	162	166	172	177	189	191	203	219	225	231	232	233	236	238	241	246	247	249	251	252	253
R1355	1	14	64	90	98	100	106	107	116	134	156	164	167	173	182	184	186	189	190	196	198	199	202	205
R1356	13	26	94	122	126	130	152	162	169	171	173	181	186	187	188	189	193	195	196	197	198	199	200	201
R1357	1	50	69	98	107	121	131	147	157	158	161	163	177	180	182	188	190	191	195	198	199	202	205	213
R1358	1	12	80	91	98	107	117	123	141	146	161	166	171	176	179	182	185	187	190	193	197	198	199	200
R1359	1	11	45	86	98	107	120	131	145	161	163	167	169	175	177	179	182	184	185	190	191	194	195	204
R1360	1	77	98	99	107	110	157	166	167	174	178	182	184	188	189	190	195	197	198	199	200	201	202	204
R1361	1	36	84	93	98	107	133	141	158	159	161	164	177	179	183	185	186	190	191	193	196	197	198	199
R1362	21	53	81	93	101	115	128	159	165	167	175	177	184	185	190	191	192	197	200	201	202	204	205	206
R1363	1	54	98	107	141	147	161	179	182	185	190	198	199	202	205	208	209	213	214	224	225	240	244	246
R1364	10	117	126	163	165	171	181	187	188	193	194	195	197	200	201	203	204	206	207	208	209	210	211	212
R1365	1	9	98	107	138	143	144	168	174	175	182	185	187	188	189	194	197	200	201	203	204	205	206	207
R1366	20	73	117	127	138	150	155	165	174	175	176	180	183	185	188	193	194	197	198	199	200	201	202	203
R1367	27	59	71	92	109	122	137	146	154	165	168	183	184	188	214	217	223	224	228	229	230	231	232	234
R1368	91	146	165	171	187	193	197	200	215	217	220	221	225	228	231	232	233	234	236	241	243	246	247	251
R1369	25	39	78	82	98	130	154	155	162	164	165	169	173	175	185	186	191	193	194	196	198	199	202	205
R1370	22	79	112	129	146	165	171	182	187	193	198	199	203	204	207	208	209	212	214	217	220	222	223	225
R1371	113	124	150	164	174	176	177	186	188	191	196	203	205	208	216	217	230	231	233	236	238	239	240	242
R1372	8	34	95	150	151	168	171	176	187	188	193	214	215	221	225	233	235	236	245	246	247	251	257	259
R1373	1	33	90	94	98	107	119	136	143	154	155	162	164	165	173	175	178	182	185	186	189	193	194	195
R1374	58	106	114	148	158	173	179	185	207	219	223	234	245	251	260	262	263	265	266	270	272	274	276	278
R1375	61	70	102	111	124	162	163	174	195	197	200	201	204	205	206	207	209	210	211	212	213	214	216	217
R1376	89	129	168	169	171	182	187	193	198	199	202	205	206	210	211	212	213	214	215	216	218	219	220	221
R1377	1	29	87	88	98	106	107	125	149	162	170	182	183	188	197	201	203	204	206	207	209	210	211	212
R1378	1	7	63	98	107	111	113	118	164	174	177	181	182	183	186	191	196	205	216	217	220	229	230	231
R1379	1	46	98	107	135	139	153	154	155	157	160	171	187	188	189	192	193	194	195	197	198	199	200	201
R1380	6	74	105	125	158	163	179	195	198	199	202	205	208	214	223	225	230	232	233	234	241	249	256	257

Copyright © 2005 IEEE. All rights reserved.
This is an unapproved draft, subject to change

Table 55A–1—P matrix: location 1 to 24

	C1	C2	C3	C4	C5	C6	C7	C8	C9	C10	C11	C12	C13	C14	C15	C16	C17	C18	C19	C20	C21	C22	C23	C24
R1381	1	32	47	91	98	107	125	143	171	175	177	180	182	185	187	189	191	194	195	198	199	202	204	205
R1382	1	5	56	89	98	103	107	108	157	160	162	167	168	171	178	182	184	187	188	189	190	192	193	194
R1383	1	4	38	92	98	107	116	132	154	165	167	168	176	181	182	184	188	189	191	207	208	214	215	223
R1384	3	66	102	123	131	173	176	177	188	191	201	204	206	207	209	210	211	212	213	214	215	216	217	219
R1385	10	39	62	92	146	160	163	168	169	170	173	175	180	188	192	193	194	197	198	200	201	202	204	205
R1386	1	22	98	107	112	120	127	146	165	169	179	182	183	189	198	199	203	213	223	224	230	233	235	243
R1387	1	9	50	98	107	121	138	143	147	159	163	174	175	180	182	185	187	189	193	194	195	197	200	201
R1388	53	84	93	101	133	141	155	158	159	160	161	175	177	179	183	189	190	191	194	195	208	216	221	223
R1389	1	92	98	100	107	156	168	182	188	198	199	202	205	208	214	216	219	221	226	229	232	233	236	238
R1390	1	43	54	91	98	107	126	147	181	182	188	189	197	200	201	203	204	206	207	210	211	212	213	217
R1391	104	117	142	153	155	165	167	171	184	187	189	190	193	194	197	198	199	200	201	202	203	204	205	206
R1392	1	36	65	98	107	154	158	164	186	189	196	208	224	226	233	234	235	238	243	245	247	252	257	258
R1393	21	39	99	128	160	165	166	169	173	185	192	194	197	198	200	201	203	204	206	207	208	209	210	211
R1394	60	75	104	105	163	166	167	184	190	194	195	197	198	199	200	201	202	204	205	206	209	210	211	212
R1395	97	133	183	194	197	201	203	204	206	207	208	209	210	211	212	213	214	215	216	217	220	222	224	227
R1396	18	26	42	94	108	125	126	144	160	167	168	170	171	173	181	184	187	188	190	192	193	194	197	198
R1397	1	87	98	102	106	107	149	159	162	182	189	193	197	198	199	201	202	204	205	206	207	208	209	210
R1398	55	82	96	98	130	154	158	162	167	179	184	185	190	191	195	197	200	201	203	204	205	206	207	208
R1399	1	80	91	98	107	117	118	138	141	161	165	171	174	177	179	182	185	187	189	190	191	193	197	198
R1400	1	46	96	98	107	139	153	155	157	160	167	171	179	184	187	188	189	190	192	193	194	197	198	200
R1401	1	17	83	98	99	107	113	114	138	158	163	164	166	170	173	174	182	186	189	196	198	202	203	208
R1402	63	110	113	151	157	164	171	174	186	187	188	193	196	205	214	217	221	223	225	230	231	232	234	235
R1403	52	140	155	161	162	172	189	190	197	200	201	203	204	206	207	210	211	212	213	217	219	220	221	222
R1404	48	73	86	116	127	131	154	157	161	167	175	177	183	184	185	188	189	191	193	194	197	198	199	200
R1405	59	77	95	99	109	146	165	166	167	168	172	178	183	184	185	190	195	197	200	201	204	206	207	209
R1406	1	16	72	98	105	107	112	128	163	168	182	189	195	198	199	201	204	206	207	208	209	210	212	216
R1407	25	57	67	97	132	152	154	159	164	169	175	181	183	184	185	186	194	196	197	201	204	206	207	209
R1408	1	15	40	98	105	107	148	163	171	182	183	184	185	187	189	193	195	198	199	202	205	207	208	211
R1409	1	23	51	94	97	98	107	110	127	154	157	160	173	174	177	182	183	188	189	191	192	194	197	198
R1410	1	37	98	107	135	137	145	154	155	167	172	175	182	184	185	189	190	193	194	195	199	224	226	228
R1411	14	106	162	189	197	200	201	203	204	206	207	209	211	214	218	219	224	225	228	229	230	233	236	238
R1412	58	79	107	129	160	171	182	187	192	194	195	197	199	200	201	204	206	209	210	211	212	214	217	219
R1413	1	45	98	107	124	145	167	174	175	182	184	185	189	190	194	195	203	205	215	216	221	223	226	232
R1414	12	34	95	123	132	146	154	165	168	173	176	181	198	199	202	205	214	216	220	221	224	226	227	228
R1415	1	33	85	90	94	98	107	114	130	136	140	143	155	156	158	161	164	175	182	185	186	190	193	194
R1416	1	11	98	107	120	123	153	155	161	169	171	176	179	182	187	193	198	199	202	204	205	209	214	217
R1417	1	78	98	107	155	167	181	182	184	189	190	208	215	226	228	229	233	234	238	239	240	244	245	247
R1418	93	103	157	159	162	171	177	178	179	187	188	191	203	204	208	209	214	216	217	223	231	232	233	235
R1419	1	70	98	107	111	122	124	135	163	182	189	195	198	202	203	205	215	216	220	226	228	229	230	233
R1420	1	10	98	107	129	143	163	171	175	185	187	189	195	207	208	219	223	229	232	233	234	241	244	245
R1421	1	32	56	89	91	98	103	107	150	157	162	168	176	178	180	182	189	198	199	202	204	205	208	209
R1422	1	9	38	92	98	107	138	142	143	168	174	175	182	185	187	188	189	191	194	197	200	201	203	204
R1423	1	49	92	93	98	106	107	119	155	159	162	165	168	177	178	182	187	188	189	191	198	199	208	213
R1424	91	149	171	187	193	197	201	203	204	206	207	208	209	210	211	212	213	214	215	216	217	219	220	222
R1425	19	115	167	168	173	182	184	188	189	190	198	202	208	214	215	216	223	232	235	241	246	247	251	254
R1426	1	53	98	101	107	160	182	189	195	198	199	200	202	203	205	212	215	222	223	224	226	227	228	230
R1427	45	145	165	167	172	175	184	185	190	194	197	198	199	200	201	202	203	204	205	206	207	208	209	210
R1428	1	79	98	107	129	150	154	167	171	176	184	188	189	190	207	208	215	220	223	224	225	226	235	236
R1429	8	119	124	150	151	155	165	171	174	176	178	187	188	193	198	199	202	215	216	221	225	230	232	236
R1430	1	34	60	90	95	98	104	106	107	164	167	168	182	184	186	189	190	194	196	197	198	199	200	201
R1431	33	65	94	136	143	164	173	175	185	186	193	194	195	196	197	198	199	200	201	202	203	204	205	209
R1432	63	64	89	90	100	112	113	134	156	162	168	173	179	189	197	200	201	202	204	205	206	207	208	209
R1433	70	88	111	124	163	170	188	195	199	203	208	209	214	215	220	221	232	235	236	239	240	241	244	246
R1434	7	67	97	118	129	132	152	154	163	169	171	177	178	181	182	183	187	189	191	193	195	200	207	208
R1435	1	98	107	182	189	198	199	202	205	208	216	219	225	227	230	231	232	239	242	246	249	253	255	256
R1436	1	6	98	105	107	115	125	163	167	179	182	184	189	190	195	197	199	200	201	203	204	206	207	208
R1437	1	36	55	76	80	91	96	107	117	141	158	161	164	165	167	171	177	184	185	186	187	191	193	195
R1438	5	21	118	128	133	160	177	183	189	191	192	194	195	197	199	200	201	202	204	205	206	207	208	209
R1439	1	4	42	85	90	98	107	108	114	116	140	144	155	158	160	161	162	163	164	165	168	173	182	186
R1440	3	30	110	114	127	144	157	158	168	174	183	188	196	201	203	204	205	206	207	208	209	210	211	212

Copyright © 2005 IEEE. All rights reserved.
This is an unapproved draft, subject to change

Table 55A–1—P matrix: location 1 to 24

	C1	C2	C3	C4	C5	C6	C7	C8	C9	C10	C11	C12	C13	C14	C15	C16	C17	C18	C19	C20	C21	C22	C23	C24
R1441	1	49	93	98	105	107	119	155	159	163	165	171	177	178	182	187	189	191	195	197	198	199	200	201
R1442	51	103	110	154	162	171	174	176	177	178	187	191	193	197	198	199	200	201	202	203	204	206	207	208
R1443	1	19	37	58	66	98	102	107	123	135	154	155	173	176	181	182	195	199	213	215	216	217	221	226
R1444	1	41	92	98	102	107	127	146	165	168	182	183	188	189	195	198	199	202	204	205	208	209	220	221
R1445	24	91	122	132	152	159	169	170	171	181	187	190	197	198	199	200	201	202	204	205	206	207	209	210
R1446	59	109	146	159	165	172	182	183	193	197	198	199	200	201	202	204	205	206	207	209	210	211	213	214
R1447	50	86	121	131	147	154	158	161	163	177	180	189	190	191	195	201	203	204	206	207	209	210	211	212
R1448	25	77	99	136	154	164	166	167	175	178	184	185	186	190	193	194	195	196	197	198	199	200	201	202
R1449	8	74	100	121	150	151	156	158	163	171	176	180	187	188	189	193	195	208	211	213	216	221	224	225
R1450	1	65	90	98	107	154	162	164	182	186	189	196	197	200	201	203	204	206	207	209	210	211	212	213
R1451	112	145	164	167	175	184	185	186	190	193	194	196	197	198	199	200	201	204	206	207	209	210	211	212
R1452	1	83	89	98	99	107	138	166	168	174	182	189	190	195	198	202	203	208	209	221	223	226	230	231
R1453	88	131	160	170	177	188	191	192	194	195	197	198	200	201	202	204	205	206	207	209	210	211	212	213
R1454	1	7	52	98	107	118	162	163	172	173	177	182	183	186	191	195	196	198	199	202	205	214	226	229
R1455	28	88	116	164	167	170	184	186	188	190	191	192	194	195	196	198	202	205	207	230	234	238	239	240
R1456	36	67	97	123	132	152	154	158	164	169	176	177	181	182	185	186	191	196	200	215	219	220	223	224
R1457	1	23	38	68	92	97	98	107	127	151	163	168	171	182	183	187	188	189	191	193	195	198	199	200
R1458	48	77	99	152	154	166	167	169	178	184	190	195	203	208	215	216	217	219	223	224	226	229	231	233
R1459	11	30	114	117	120	127	144	158	165	168	169	171	173	179	183	187	190	193	196	204	209	213	214	216
R1460	51	65	83	99	110	138	157	166	177	191	195	198	199	202	203	205	209	214	216	229	230	232	234	235
R1461	1	20	37	98	107	117	135	138	150	154	155	165	174	176	182	188	189	195	198	202	208	209	213	214
R1462	52	93	112	159	162	172	177	191	193	197	200	201	202	203	204	205	206	207	208	209	210	211	212	213
R1463	80	91	116	117	141	161	165	167	171	179	184	185	187	193	197	199	200	201	203	204	206	208	209	210
R1464	10	45	145	163	167	175	184	190	195	197	200	201	203	204	206	207	208	209	210	211	212	213	214	215
R1465	43	64	90	100	126	134	156	162	163	164	171	173	181	186	187	188	189	193	195	196	197	198	199	200
R1466	9	104	110	138	143	145	157	187	188	193	194	197	198	199	200	201	202	203	204	205	206	207	208	210
R1467	155	191	258	273	275	280	297	315	316	318	321	322	323	324	325									
R1468	1	35	98	107	108	129	135	154	160	167	171	184	187	189	192	193	194	195	197	198	199	200	201	202
R1469	1	98	99	101	107	131	148	160	162	166	175	177	182	189	191	192	193	195	197	198	200	201	202	203
R1470	32	61	91	162	171	174	180	187	193	204	205	209	214	217	221	225	231	232	233	235	238	239	241	242
R1471	28	83	88	99	130	138	154	162	164	166	170	174	186	188	191	192	194	196	198	202	203	209	214	215
R1472	29	134	161	173	183	190	198	199	202	205	207	216	221	226	232	236	238	240	241	244	248	249	251	254
R1473	1	44	52	155	162	166	172	182	189	198	199	202	203	205	216	230	231	236	252	260	263	265	266	268
R1474	1	31	72	97	98	105	107	112	116	131	141	161	163	167	168	177	179	182	184	185	191	195	198	199
R1475	1	18	57	98	107	122	125	143	154	159	175	182	183	188	189	194	197	198	199	200	201	202	204	206
R1476	20	40	56	78	89	103	117	138	148	150	155	157	165	168	171	174	176	178	184	185	187	193	205	207
R1477	71	91	120	122	137	154	169	171	172	179	183	186	187	193	196	208	216	221	223	224	225	229	231	233
R1478	39	137	165	169	172	173	185	190	197	200	201	203	204	206	207	209	210	211	213	214	217	219	220	223
R1479	22	112	131	146	154	165	177	191	202	203	205	208	210	212	216	218	220	221	223	227	228	231	234	236
R1480	1	98	151	164	171	182	186	187	189	193	196	198	199	202	205	208	217	222	225	226	231	232	233	237
R1481	8	28	58	88	140	150	151	155	161	164	170	171	176	186	187	189	190	191	192	193	194	195	196	198
R1482	48	90	150	154	162	164	176	182	186	188	196	197	200	201	203	204	206	207	208	209	210	211	212	213
R1483	221	261	279	290	301	305	315	316	318	321	323	324	325											
R1484	1	98	107	119	136	154	155	165	175	178	182	185	189	193	194	197	200	201	204	206	207	209	210	211
R1485	49	64	90	93	100	118	119	134	155	156	159	162	164	165	178	186	193	196	202	205	214	217	219	223
R1486	19	78	98	123	155	173	176	188	189	208	216	220	221	222	228	230	231	234	237	238	240	242	243	246
R1487	1	89	98	106	107	121	162	163	168	180	182	189	195	197	198	199	200	201	202	203	204	205	206	207
R1488	7	24	49	72	93	105	112	118	119	152	155	165	168	169	178	183	189	190	197	200	201	203	204	206
R1489	1	77	98	99	107	166	167	178	182	184	189	190	195	198	199	202	203	205	206	207	210	211	212	213
R1490	28	88	114	158	164	170	173	186	188	191	192	194	195	196	197	198	200	201	202	203	204	205	206	207
R1491	63	102	113	164	171	186	187	193	214	216	217	220	221	225	230	231	235	236	238	239	240	243	244	247
R1492	51	99	110	154	157	166	174	177	188	191	195	198	199	202	203	208	209	214	221	223	224	229	230	233
R1493	1	37	55	96	98	107	135	154	155	167	179	182	184	189	190	198	202	208	221	224	225	226	228	231
R1494	1	97	98	107	109	169	172	182	189	197	198	199	201	202	203	205	206	207	210	211	212	213	215	220
R1495	1	18	30	98	107	114	122	125	127	144	145	154	158	167	168	173	175	182	183	184	185	189	190	193
R1496	42	97	100	108	144	147	156	160	167	168	184	189	190	192	194	195	197	198	201	202	204	205	206	207
R1497	2	68	128	142	160	163	165	187	192	193	194	197	198	200	201	202	204	205	206	207	209	210	211	212
R1498	1	2	98	107	142	153	155	165	167	171	172	182	184	189	190	197	198	199	200	201	202	203	204	205
R1499	1	2	28	88	98	107	131	142	164	165	170	177	182	186	187	188	189	190	192	193	194	195	196	197
R1500	2	33	34	79	94	95	124	129	136	142	143	154	165	168	171	173	174	175	182	185	193	194	195	197

Copyright © 2005 IEEE. All rights reserved.
This is an unapproved draft, subject to change

Table 55A–1—P matrix: location 1 to 24

	C1	C2	C3	C4	C5	C6	C7	C8	C9	C10	C11	C12	C13	C14	C15	C16	C17	C18	C19	C20	C21	C22	C23	C24
R1501	1	2	48	98	107	140	142	151	154	155	161	165	171	182	190	197	198	199	200	201	202	203	204	205
R1502	2	107	137	142	165	172	183	187	193	197	200	201	203	204	206	207	209	211	213	214	216	218	219	221
R1503	2	142	146	187	193	245	247	252	253	259	260	261	264	265	267	270	272	273	274	275	276	278	280	282
R1504	2	105	142	163	165	187	193	195	217	221	231	238	239	244	245	247	249	250	251	252	253	255	256	257
R1505	19	35	108	129	143	155	160	167	171	173	175	182	184	185	187	188	189	190	192	195	198	202	203	205
R1506	2	30	42	76	98	108	114	127	133	142	158	160	165	167	173	177	184	187	190	191	192	193	194	195
R1507	1	33	92	94	98	107	122	136	143	168	173	175	182	185	188	189	193	194	195	197	200	201	203	204
R1508	24	86	130	131	144	152	154	159	161	162	168	169	177	189	191	193	197	200	201	204	206	207	208	209
R1509	147	154	175	185	193	194	197	198	199	200	201	202	203	204	205	206	207	208	209	210	212	213	214	215
R1510	2	19	49	93	119	142	155	159	173	177	178	187	188	189	191	197	200	201	202	203	204	205	206	207
R1511	12	86	115	123	131	146	161	165	167	176	177	184	189	191	199	208	215	217	220	221	222	223	226	228
R1512	1	58	77	98	99	107	113	156	164	166	167	178	182	184	186	189	190	195	196	198	199	200	202	203
R1513	11	80	91	117	120	141	145	161	165	167	169	171	175	184	187	189	190	194	198	199	202	204	205	208
R1514	1	93	98	107	110	128	150	157	159	174	176	177	182	186	189	191	192	193	194	195	196	199	203	205
R1515	1	2	60	98	104	107	142	165	167	182	184	187	189	190	193	194	197	198	199	200	201	202	203	204
R1516	78	81	108	115	155	160	161	165	184	189	190	192	194	195	197	198	199	200	201	202	204	205	206	207
R1517	15	105	141	161	162	163	179	185	189	190	194	195	198	199	202	204	205	208	209	214	217	223	225	226
R1518	14	44	60	104	106	107	153	162	166	167	171	184	187	189	190	193	194	198	199	202	203	205	213	215
R1519	1	31	98	107	123	131	141	161	172	176	177	179	182	185	190	191	193	197	198	199	200	201	202	203
R1520	1	2	85	90	98	103	107	114	140	142	155	157	158	161	164	165	171	173	178	182	186	188	190	196
R1521	113	148	162	164	185	186	189	196	197	200	201	203	204	206	209	210	211	212	213	214	222	223	224	226
R1522	45	61	145	153	155	162	167	171	174	175	184	185	187	190	193	194	197	198	199	200	201	202	203	204
R1523	134	172	173	197	198	199	200	201	202	203	204	205	206	207	208	209	210	211	212	213	214	219	220	221
R1524	1	29	44	98	155	166	167	182	183	184	190	191	196	198	199	202	203	205	208	215	222	223	230	236
R1525	31	62	92	131	141	146	160	161	165	168	177	179	180	185	188	189	190	191	192	194	195	197	198	200
R1526	2	130	142	154	161	162	165	187	189	190	193	197	200	201	203	204	206	207	209	210	211	212	213	214
R1527	181	187	193	198	199	202	205	216	230	232	236	238	241	245	249	251	259	263	264	265	266	267	268	269
R1528	1	8	41	49	93	98	102	107	119	127	146	150	151	155	159	171	176	177	178	182	183	187	188	189
R1529	24	90	135	152	154	159	162	164	169	186	190	193	196	197	198	200	201	202	204	205	206	207	209	210
R1530	19	63	113	145	164	167	173	175	184	185	186	188	189	190	193	194	196	197	198	199	200	201	202	203
R1531	32	81	91	115	165	167	171	180	184	187	190	193	197	199	200	201	203	206	207	208	209	210	211	212
R1532	1	89	98	107	141	160	161	164	168	179	182	185	186	190	192	194	195	196	197	199	200	201	204	206
R1533	1	2	50	98	100	107	121	142	147	156	163	165	175	180	182	185	187	194	195	197	200	201	203	204
R1534	1	28	35	68	88	98	107	108	129	163	164	167	170	171	184	186	187	188	189	190	191	192	193	194
R1535	1	41	85	90	98	101	102	107	114	127	128	140	146	155	158	160	161	162	164	165	173	175	182	183
R1536	1	24	98	107	152	159	164	169	178	182	186	189	190	193	196	198	199	202	203	205	217	223	225	226
R1537	2	43	104	126	142	165	167	171	181	184	188	190	194	197	200	201	203	204	206	207	208	209	210	211
R1538	8	150	151	171	176	187	188	193	215	218	220	224	225	229	233	235	236	245	246	247	248	251	252	253
R1539	27	44	81	107	115	155	165	166	167	199	203	215	221	222	226	228	229	232	233	234	237	240	241	242
R1540	89	126	168	171	181	187	188	193	198	199	202	205	213	214	216	221	224	225	229	230	232	233	238	239
R1541	7	62	84	92	93	118	133	141	146	159	160	161	163	165	168	179	180	185	188	190	192	193	194	199
R1542	1	98	107	120	139	157	160	169	176	179	188	189	192	194	195	197	198	200	201	202	204	205	206	207
R1543	54	66	102	123	147	162	176	188	197	200	201	203	204	206	207	208	210	211	212	216	217	219	220	221
R1544	6	68	105	117	125	160	165	179	192	194	195	197	199	200	201	204	206	207	208	209	210	211	212	217
R1545	35	108	128	129	152	160	167	169	171	182	184	187	190	192	193	194	195	197	199	200	201	204	206	209
R1546	5	69	101	131	157	158	160	175	177	185	188	191	192	193	199	203	208	216	229	230	232	234	238	241
R1547	4	116	148	162	165	166	167	174	184	185	188	190	197	200	201	204	205	206	207	209	210	211	212	213
R1548	3	20	61	117	138	150	162	165	173	176	188	197	200	209	213	214	215	220	221	224	226	228	232	234
R1549	29	47	74	125	158	177	183	189	191	195	198	199	202	205	213	214	216	220	221	224	225	226	229	230
R1550	43	108	126	160	167	169	171	181	184	187	188	190	192	193	194	195	197	199	200	201	204	206	207	209
R1551	104	125	167	180	184	190	194	197	200	201	203	204	206	207	209	210	211	212	213	215	219	220	221	222
R1552	1	71	98	107	111	122	137	154	163	172	174	182	189	195	198	199	202	220	223	224	226	230	231	233
R1553	1	2	24	41	98	102	107	127	142	146	152	159	169	182	183	187	189	190	198	199	202	203	205	216
R1554	1	15	27	98	105	107	118	162	163	177	182	184	191	195	197	200	201	203	204	209	215	216	217	218
R1555	46	80	91	117	139	141	153	155	157	160	161	165	179	182	185	188	189	190	192	194	195	199	203	213
R1556	1	75	98	106	107	162	163	166	182	189	195	197	198	199	200	201	202	204	205	206	207	208	209	210
R1557	1	10	19	98	107	110	153	155	157	163	171	173	174	182	187	193	194	195	197	200	201	203	204	205
R1558	172	189	194	198	199	202	205	208	213	224	226	229	231	232	235	236	239	240	241	245	246	251	254	257
R1559	9	26	45	94	122	126	138	143	145	154	171	173	174	181	188	193	195	197	198	199	200	201	202	203
R1560	1	86	98	107	122	128	131	140	154	155	177	182	189	191	197	198	199	200	201	202	204	205	206	207

Copyright © 2005 IEEE. All rights reserved.
This is an unapproved draft, subject to change

Table 55A–1—P matrix: location 1 to 24

	C1	C2	C3	C4	C5	C6	C7	C8	C9	C10	C11	C12	C13	C14	C15	C16	C17	C18	C19	C20	C21	C22	C23	C24
R1561	1	69	81	96	98	107	115	131	157	158	165	177	179	182	188	189	191	195	198	202	205	208	211	213
R1562	1	17	98	107	114	141	158	161	166	170	173	179	182	185	190	198	203	208	215	223	225	226	229	230
R1563	1	75	87	98	106	107	126	149	162	166	171	181	182	187	188	189	193	197	201	204	206	207	208	209
R1564	82	98	130	138	154	157	162	174	185	188	191	194	198	199	202	209	214	216	221	222	223	224	226	232
R1565	26	46	94	95	122	126	139	153	154	155	157	160	168	173	177	181	182	191	192	194	197	198	200	201
R1566	1	16	41	98	102	107	127	128	146	165	182	183	189	192	194	195	197	199	200	201	203	204	206	207
R1567	1	24	98	107	113	152	159	164	169	182	184	186	189	190	193	196	198	199	202	203	205	217	223	225
R1568	1	15	74	98	105	107	114	139	157	160	162	163	173	188	189	192	194	198	202	203	205	216	221	223
R1569	94	102	145	162	167	173	175	183	184	185	190	193	194	195	198	199	202	205	215	220	221	226	229	234
R1570	259	264	266	268	269	271	273	277	279	286	289	306	308	317	323									
R1571	14	106	137	160	162	169	172	189	192	194	195	197	198	200	201	202	204	205	206	207	209	210	211	212
R1572	1	98	107	125	149	182	186	189	193	196	200	210	212	214	215	216	218	220	221	222	223	224	226	227
R1573	13	107	111	147	163	168	173	174	186	189	195	196	205	208	213	214	216	220	222	224	228	230	233	234
R1574	27	109	156	172	174	184	195	197	200	201	203	204	205	206	207	209	210	211	212	213	214	217	219	220
R1575	1	11	98	107	120	132	154	169	179	181	189	190	198	199	202	204	205	208	209	214	216	217	224	226
R1576	1	2	25	59	73	98	107	109	127	142	146	164	172	182	186	187	189	193	196	197	198	199	200	202
R1577	1	41	50	88	98	102	107	121	127	146	147	163	165	170	180	182	183	188	189	195	198	199	202	205
R1578	1	57	98	100	107	156	159	182	183	193	198	199	202	203	205	208	216	219	223	225	226	234	238	239
R1579	1	19	40	68	98	107	130	148	154	160	163	173	176	182	184	185	188	192	194	197	199	200	201	204
R1580	6	23	66	97	102	105	123	125	127	128	160	161	163	173	176	179	183	188	189	190	192	194	197	199
R1581	1	5	35	82	107	108	123	129	130	154	160	162	167	170	171	176	184	185	187	189	190	191	192	193
R1582	4	101	109	116	127	160	165	167	172	175	183	184	185	190	192	193	197	199	200	201	204	206	209	210
R1583	3	74	158	159	173	179	193	201	204	206	207	209	210	211	212	213	214	215	217	219	222	223	224	227
R1584	1	70	98	107	111	113	124	158	163	164	174	182	186	189	195	196	198	199	202	203	217	220	223	226
R1585	196	264	281	291	303	309	315	316	318	319	321	322	323	324	325									
R1586	47	124	125	174	177	191	195	198	199	202	203	213	214	216	217	221	223	224	229	231	233	238	240	242
R1587	34	55	95	96	108	149	153	155	160	168	171	179	187	192	193	194	197	198	201	202	204	206	207	209
R1588	1	33	86	94	98	107	118	131	136	143	154	161	168	172	173	175	182	185	189	190	193	194	195	216
R1589	87	106	149	162	197	201	203	204	206	207	208	209	210	212	213	214	216	217	220	221	222	223	224	229
R1590	115	138	144	167	168	174	184	190	199	205	207	209	215	216	217	223	228	229	230	231	234	236	237	243
R1591	1	46	107	139	153	155	157	160	171	187	188	189	192	193	194	197	198	201	202	204	205	206	207	208
R1592	18	69	122	125	131	154	157	158	177	188	191	198	199	205	208	214	221	222	224	229	232	234	236	237
R1593	26	36	60	94	104	122	126	148	154	158	162	164	167	171	173	181	182	184	185	186	187	188	190	193
R1594	1	21	61	96	98	107	128	143	160	162	167	174	175	179	182	184	185	189	190	192	193	197	198	200
R1595	1	17	56	73	89	98	103	107	114	127	157	158	162	168	170	171	173	175	178	182	183	185	187	188
R1596	29	38	59	78	92	109	146	155	165	168	172	188	189	191	197	200	201	203	204	206	207	209	210	211
R1597	25	122	134	154	157	164	173	175	185	186	188	193	194	196	197	200	201	203	204	206	207	208	209	210
R1598	44	63	95	107	113	155	164	166	168	186	192	194	195	196	197	198	200	201	202	204	205	206	207	209
R1599	1	16	31	98	107	128	131	141	161	179	182	185	190	198	199	202	205	209	214	220	222	225	229	235
R1600	1	85	90	98	107	114	139	140	155	157	158	160	161	162	164	173	184	186	188	190	192	194	195	196
R1601	1	94	98	107	114	158	182	189	195	198	199	202	208	216	226	229	230	232	233	234	238	241	242	243
R1602	53	101	102	142	160	175	185	193	194	195	197	198	199	200	201	202	204	205	206	207	209	210	211	212
R1603	14	103	106	147	157	165	171	178	181	187	188	189	193	198	199	202	205	221	223	225	226	230	239	243
R1604	13	135	154	169	186	189	196	199	208	215	217	224	225	226	229	231	232	233	235	236	240	241	244	246
R1605	27	76	84	93	98	125	133	141	159	161	179	183	184	185	189	190	193	197	200	201	204	206	207	208
R1606	1	12	32	91	98	107	111	123	133	146	163	165	171	174	176	180	182	183	187	189	193	195	197	200
R1607	42	54	108	144	147	156	160	167	168	184	190	192	194	195	197	198	200	201	202	204	205	206	207	210
R1608	1	2	81	98	107	115	126	141	142	161	167	171	179	181	182	184	185	188	199	213	215	217	221	224
R1609	1	53	98	101	107	111	160	163	174	175	182	185	189	193	194	197	200	201	204	205	206	207	208	209
R1610	20	66	102	117	123	138	150	165	174	205	209	213	214	216	217	223	224	232	235	236	238	241	242	243
R1611	1	96	98	105	107	119	145	155	163	165	175	178	179	180	182	185	189	193	194	197	200	201	204	206
R1612	1	17	35	71	98	106	107	108	114	122	129	137	154	158	160	162	167	170	171	172	173	184	187	189
R1613	39	132	154	165	169	173	181	185	186	196	198	199	202	205	216	223	224	225	226	227	229	231	233	235
R1614	22	50	112	121	146	147	149	157	163	165	180	188	195	200	202	203	205	208	213	215	219	221	223	224
R1615	16	79	100	128	129	156	171	182	187	189	193	197	198	199	200	201	202	203	204	205	206	209	210	211
R1616	36	58	158	164	182	184	186	196	198	199	202	205	213	216	224	229	230	232	234	235	236	241	243	244
R1617	15	21	65	105	124	128	152	154	160	162	163	169	174	192	194	198	205	220	225	229	232	233	234	238
R1618	34	69	80	91	94	95	117	131	141	157	158	161	165	168	171	173	177	179	185	187	188	189	190	191
R1619	33	94	112	136	143	154	166	173	175	185	193	194	195	197	198	199	200	201	203	204	206	207	209	210
R1620	14	72	105	106	112	162	168	189	197	199	200	201	202	204	205	206	207	208	209	210	211	212	219	220

Copyright © 2005 IEEE. All rights reserved.
This is an unapproved draft, subject to change

Table 55A–1—P matrix: location 1 to 24

	C1	C2	C3	C4	C5	C6	C7	C8	C9	C10	C11	C12	C13	C14	C15	C16	C17	C18	C19	C20	C21	C22	C23	C24
R1621	1	57	98	107	110	157	159	174	182	183	188	189	198	199	202	203	226	229	232	233	234	236	240	242
R1622	1	13	40	67	83	97	98	99	107	132	138	148	152	154	162	166	169	174	181	182	184	185	186	195
R1623	23	41	97	102	146	160	165	192	194	195	197	198	201	202	204	205	206	207	209	210	211	212	213	214
R1624	12	24	52	123	146	152	159	162	165	169	172	176	190	193	202	203	205	208	216	220	221	223	225	228
R1625	75	116	153	155	156	166	167	171	184	187	190	193	203	207	208	214	215	216	219	221	223	225	226	232
R1626	11	43	85	90	114	120	126	140	155	158	161	162	164	169	171	172	173	179	181	185	186	187	188	189
R1627	26	76	81	94	98	115	122	126	154	165	167	171	173	177	181	184	187	188	190	191	193	195	198	202
R1628	42	103	108	126	144	157	160	162	167	168	178	181	184	190	192	194	195	199	203	208	213	214	215	217
R1629	1	10	30	54	87	98	106	107	114	127	142	144	147	149	158	162	163	168	173	182	183	189	194	195
R1630	1	46	56	89	98	103	107	139	146	153	160	162	165	168	178	189	192	194	195	198	202	203	205	214
R1631	62	73	91	92	127	146	160	165	168	171	175	180	183	185	187	188	192	195	197	199	200	201	203	204
R1632	1	59	98	107	109	120	146	165	169	170	172	174	179	182	183	189	197	198	199	200	201	202	203	204
R1633	1	98	107	127	151	171	182	183	187	189	193	198	199	201	202	203	204	205	206	207	209	210	211	213
R1634	25	140	154	155	159	161	164	175	185	186	189	190	192	195	196	197	199	200	201	204	206	207	208	209
R1635	47	48	125	154	158	177	191	195	198	199	202	205	208	213	214	219	221	225	226	233	234	235	240	243
R1636	8	108	139	150	151	157	167	171	176	182	184	187	190	193	198	199	202	205	216	225	230	232	233	241
R1637	60	74	104	158	167	181	184	190	194	197	200	201	203	204	206	207	208	209	210	211	212	213	214	215
R1638	1	89	98	107	135	154	168	178	182	189	198	202	205	208	214	215	218	220	221	223	226	228	229	230
R1639	88	134	170	173	188	198	199	202	205	215	216	221	223	226	227	231	236	239	240	245	247	249	254	256
R1640	7	32	44	91	107	118	147	155	163	166	171	177	179	180	183	187	189	191	193	195	197	200	201	206
R1641	1	31	70	82	107	111	115	124	130	131	141	154	161	162	163	167	177	179	182	184	195	197	198	200
R1642	1	98	107	129	171	187	189	193	200	207	208	215	217	225	226	229	230	231	232	236	240	241	246	248
R1643	1	6	27	98	105	107	125	148	162	163	179	182	184	185	189	195	197	200	201	203	204	206	209	210
R1644	61	113	144	162	164	168	174	183	186	196	197	200	201	203	204	205	206	207	208	209	210	211	212	213
R1645	4	29	68	116	137	160	163	165	167	172	182	183	184	189	190	192	194	199	203	207	208	215	221	223
R1646	1	3	98	107	128	173	182	189	198	199	201	202	203	204	205	206	207	209	211	213	214	215	217	218
R1647	107	136	154	208	222	224	233	234	235	237	242	245	253	266	267	273	300	301	303	307	311	314	319	322
R1648	1	98	107	121	130	154	162	163	177	180	182	189	190	191	195	197	198	199	200	201	202	203	204	205
R1649	2	45	142	145	165	167	175	184	185	187	189	190	193	194	198	199	202	205	208	215	217	221	226	229
R1650	26	82	94	98	122	126	130	162	171	173	181	185	187	188	191	193	197	198	199	200	201	202	203	204
R1651	1	27	98	107	132	154	160	181	182	184	189	192	194	195	197	198	200	201	202	204	205	206	207	209
R1652	1	17	53	98	101	107	114	118	158	160	170	173	175	177	182	185	191	193	194	195	197	199	200	201
R1653	45	64	90	100	134	145	156	162	164	167	173	175	181	184	185	186	189	190	194	196	197	200	201	203
R1654	20	68	79	95	117	129	135	138	150	154	160	163	165	168	171	174	176	182	187	188	192	193	194	197
R1655	32	91	124	171	174	180	182	184	187	193	197	198	199	200	201	202	206	207	210	211	212	213	216	217
R1656	15	34	58	95	105	162	163	168	195	197	200	201	203	204	206	207	208	209	210	211	212	216	217	219
R1657	1	56	89	98	103	107	121	157	162	163	168	170	171	178	180	182	187	188	189	193	195	197	198	199
R1658	14	38	67	92	97	106	127	132	152	154	162	168	169	181	183	188	189	191	197	198	199	201	202	203
R1659	1	13	63	72	98	105	107	112	113	158	163	164	168	182	195	198	199	203	208	216	228	229	230	238
R1660	1	57	98	107	144	159	168	182	183	189	193	198	199	202	203	205	209	217	223	226	229	230	231	233
R1661	1	12	40	98	107	123	146	148	162	165	176	182	184	185	189	191	197	198	199	200	201	202	203	204
R1662	23	62	78	92	97	127	146	155	156	165	168	180	183	188	200	214	215	217	218	219	220	224	225	228
R1663	74	122	131	154	158	173	177	191	221	222	224	226	229	234	237	242	243	244	246	248	249	254	256	258
R1664	1	28	73	88	93	98	107	123	127	159	164	170	175	176	177	182	183	185	186	188	189	192	195	196
R1665	1	10	98	107	163	182	189	194	195	197	200	208	215	219	220	225	228	229	232	234	236	239	241	243
R1666	25	137	152	164	169	172	175	185	186	193	194	196	198	199	202	205	208	213	218	220	225	231	232	233
R1667	1	9	69	84	93	98	107	131	133	134	138	141	143	157	158	159	161	173	174	175	179	182	183	187
R1668	31	54	81	92	115	131	141	147	161	165	167	168	177	179	184	185	188	189	191	199	208	209	213	215
R1669	1	98	104	107	163	167	171	182	184	187	189	190	193	194	195	197	200	201	203	204	206	207	209	210
R1670	37	60	104	135	154	155	167	184	190	194	195	197	198	200	201	202	203	204	205	206	207	208	209	210
R1671	48	102	119	154	155	165	178	203	208	219	220	221	223	224	225	226	229	230	235	236	239	240	243	245
R1672	1	88	98	103	107	138	157	162	170	171	174	178	182	187	189	193	197	198	199	200	201	202	203	204
R1673	1	7	46	98	107	118	130	139	153	154	155	157	160	162	163	169	171	177	183	187	188	191	192	193
R1674	1	98	107	125	161	182	190	208	214	221	233	235	238	245	249	250	253	257	259	261	262	263	264	267
R1675	1	49	86	93	98	107	111	119	131	155	159	161	163	165	174	178	182	190	193	195	197	198	199	200
R1676	1	6	77	83	98	105	107	125	138	163	167	174	178	179	182	184	189	190	195	205	208	209	215	225
R1677	1	19	98	107	173	182	188	198	199	202	205	211	213	215	219	223	224	225	230	234	235	244	248	250
R1678	5	52	105	142	162	163	172	195	217	219	222	224	225	226	229	232	233	235	236	237	238	241	242	245
R1679	1	3	65	98	107	154	173	178	182	185	187	189	193	197	198	199	200	202	205	208	215	216	220	221
R1680	1	36	98	107	153	155	158	164	171	186	187	189	193	196	208	223	225	226	227	229	230	231	232	234

Copyright © 2005 IEEE. All rights reserved.
This is an unapproved draft, subject to change

Table 55A–1—P matrix: location 1 to 24

	C1	C2	C3	C4	C5	C6	C7	C8	C9	C10	C11	C12	C13	C14	C15	C16	C17	C18	C19	C20	C21	C22	C23	C24
R1681	1	21	98	107	112	128	160	172	182	189	197	198	199	200	201	202	203	204	205	206	207	209	210	211
R1682	1	98	107	139	148	157	160	162	185	188	189	192	194	195	198	200	202	203	205	207	215	216	217	219
R1683	1	98	107	176	182	189	198	199	202	205	208	216	222	223	226	229	232	233	236	237	238	240	241	242
R1684	1	29	41	66	98	99	107	123	127	146	165	166	176	179	182	188	195	198	199	202	203	205	208	216
R1685	24	47	70	111	124	125	152	159	163	169	175	177	185	190	191	194	197	200	201	203	204	206	207	209
R1686	50	76	98	101	121	147	160	163	175	177	180	185	191	192	193	195	199	202	203	205	207	208	213	215
R1687	75	98	133	166	183	198	199	202	203	205	208	214	219	221	222	223	225	226	230	233	235	237	239	242
R1688	1	2	22	39	71	98	107	112	122	137	142	146	154	165	169	172	173	180	182	185	187	189	193	197
R1689	1	13	36	68	98	107	158	160	163	164	192	194	197	198	200	201	202	204	205	206	207	209	210	211
R1690	12	49	75	93	119	123	146	155	159	166	176	177	178	186	191	193	196	197	200	201	202	204	205	206
R1691	11	19	64	90	100	120	134	156	162	164	169	179	186	188	190	194	196	198	199	202	204	205	209	214
R1692	26	43	94	122	154	173	178	195	198	199	202	205	216	218	220	221	226	230	232	233	236	238	241	242
R1693	93	142	159	177	191	193	197	200	201	204	206	207	209	210	211	212	213	214	215	219	220	222	223	224
R1694	1	10	98	107	141	161	163	179	182	185	187	190	193	194	195	197	201	203	204	206	207	208	209	210
R1695	1	9	20	51	98	107	110	117	143	150	154	157	165	174	175	176	177	182	185	187	189	191	194	197
R1696	1	78	92	98	107	132	154	155	168	181	182	183	188	189	208	214	221	223	224	226	227	228	230	231
R1697	1	39	74	98	134	154	158	165	169	182	185	189	196	208	216	221	222	223	224	225	226	229	232	233
R1698	22	44	107	112	146	155	165	166	182	198	199	221	222	229	237	240	242	247	248	250	252	253	255	259
R1699	8	31	55	85	90	96	114	131	140	141	150	151	155	158	162	164	167	171	173	176	177	184	185	186
R1700	1	90	98	107	118	136	151	154	162	164	171	177	182	186	187	191	193	196	197	200	201	203	204	206
R1701	121	140	155	161	163	180	189	190	195	197	200	201	203	204	206	207	209	210	211	212	213	214	217	219
R1702	48	143	154	174	175	185	193	194	197	198	199	200	201	202	203	204	206	207	208	209	210	211	212	213
R1703	1	38	76	88	92	107	168	170	177	182	189	198	199	202	205	208	214	216	221	222	226	229	230	232
R1704	7	47	118	125	133	163	189	203	208	213	216	224	226	229	230	235	238	239	240	245	246	247	249	253
R1705	30	79	114	127	129	144	158	168	169	171	173	182	183	187	193	196	198	199	202	205	207	216	217	220
R1706	1	5	34	73	95	98	107	127	129	168	171	175	183	185	187	189	194	197	198	199	200	201	202	203
R1707	4	33	59	67	94	97	109	116	132	136	143	146	152	167	169	172	173	175	181	183	184	185	190	193
R1708	50	66	102	109	121	123	147	163	172	176	180	188	195	197	200	201	203	204	206	207	208	209	210	211
R1709	1	35	58	87	98	100	106	107	108	129	149	156	160	162	167	171	184	187	190	192	193	194	195	198
R1710	1	62	92	97	98	107	146	160	161	165	168	180	182	188	190	192	194	195	197	199	201	204	209	218
R1711	18	84	93	120	122	125	133	141	154	159	161	169	177	183	185	189	190	191	193	197	200	201	204	205
R1712	1	65	98	107	117	154	165	177	182	189	191	198	199	202	205	208	213	216	221	226	229	230	232	233
R1713	27	96	112	167	179	190	195	202	203	205	215	217	221	223	225	228	230	231	232	233	234	239	240	241
R1714	72	86	95	105	112	131	161	163	166	177	189	190	191	195	202	205	208	216	217	222	226	230	231	232
R1715	16	28	57	77	88	99	128	159	164	166	167	170	178	183	184	186	188	190	191	192	193	194	196	197
R1716	1	15	23	61	97	98	105	107	127	150	160	163	174	176	182	183	188	189	192	194	197	199	201	204
R1717	1	94	98	107	149	173	182	189	195	198	199	200	202	205	208	215	216	221	222	223	229	232	233	236
R1718	1	29	98	107	119	155	165	168	178	182	183	198	199	202	203	205	208	214	216	219	225	226	229	230
R1719	2	80	91	110	117	141	142	157	161	163	171	174	179	185	188	189	190	195	197	200	201	203	204	205
R1720	99	122	139	154	157	160	166	182	183	188	192	194	197	199	200	201	203	204	206	207	208	209	210	211
R1721	87	106	108	149	160	162	167	184	190	192	194	195	198	200	202	203	204	205	208	209	213	214	216	217
R1722	86	131	138	161	162	174	177	189	190	191	197	200	201	203	204	205	206	207	210	211	212	213	217	219
R1723	1	46	77	98	99	107	137	139	153	155	157	160	166	167	171	172	178	184	187	188	189	190	192	193

Copyright © 2005 IEEE. All rights reserved.
This is an unapproved draft, subject to change

Table 55A–2—P matrix: location 25 to 48

	C25	C26	C27	C28	C29	C30	C31	C32	C33	C34	C35	C36	C37	C38	C39	C40	C41	C42	C43	C44	C45	C46	C47	C48
R1	225	226	229	230	231	234	235	239	243	244	247	248	249	250	252	254	256	258	261	263	264	265	266	267
R2	243	244	246	247	250	252	253	259	260	263	267	270	271	272	273	274	275	276	278	279	280	281	283	285
R3	213	214	219	220	221	222	223	225	226	227	231	233	238	242	243	245	248	249	252	256	258	260	261	264
R4	233	234	235	236	238	239	240	244	246	247	249	250	251	252	253	254	256	257	258	259	262	264	266	267
R5	226	227	233	238	243	245	246	247	248	251	252	256	257	258	260	262	263	264	265	266	269	270	271	272
R6	211	212	214	215	217	219	220	222	227	230	234	235	236	238	245	246	251	257	260	262	265	266	267	268
R7	229	234	236	238	239	240	244	246	248	249	250	253	256	258	260	261	262	263	264	270	275	279	280	283
R8	216	221	222	223	224	226	229	232	235	237	238	239	241	242	243	245	246	247	249	250	254	255	257	258
R9	209	210	211	212	213	214	220	222	223	226	227	228	229	230	231	232	233	234	235	236	237	239	240	241
R10	209	210	211	212	213	214	216	219	220	221	222	224	225	226	227	229	231	233	237	238	239	245	247	249
R11	238	239	240	241	242	243	245	246	247	248	249	253	256	258	259	260	261	266	271	272	273	274	275	276
R12	239	240	242	245	246	247	248	251	253	255	256	258	260	261	263	267	268	269	271	273	275	277	279	280
R13	220	225	226	227	230	233	234	235	236	237	239	240	242	243	244	245	251	253	257	259	262	263	264	267
R14	256	257	258	259	260	262	263	264	266	268	269	270	272	274	276	278	282	285	286	291	292	293	295	298
R15	204	206	207	209	210	211	212	213	214	215	216	219	220	221	222	224	225	226	227	231	232	233	234	236
R16	244	245	250	251	252	253	257	259	262	263	264	265	267	271	273	275	280	281	282	284	285	286	287	290
R17	235	237	238	239	241	242	244	245	246	248	249	253	254	255	256	258	260	261	263	264	265	266	267	270
R18	248	250	251	252	254	259	260	261	262	264	265	266	277	279	280	281	282	286	289	290	291	293	294	295
R19	213	214	216	217	219	220	222	223	224	227	229	230	232	233	238	240	241	243	244	250	251	252	253	255
R20	195	213	215	217	218	221	223	224	225	226	228	230	231	232	233	235	236	238	239	240	241	242	245	247
R21	222	223	224	225	227	228	230	238	243	245	248	249	251	252	256	258	259	263	265	266	269	271	272	273
R22	242	252	254	255	259	260	264	265	266	267	268	269	270	271	272	274	278	279	280	281	282	283	285	288
R23	226	229	232	234	236	239	241	243	244	246	247	250	251	252	255	256	258	260	263	266	267	268	269	272
R24	205	206	207	208	209	210	211	212	213	214	216	217	219	220	222	227	229	231	233	234	235	236	242	243
R25	213	214	215	217	221	224	226	230	231	233	234	236	237	239	241	242	243	245	248	251	253	254	255	261
R26	205	215	216	218	219	220	221	223	224	225	229	232	235	238	241	243	245	246	247	248	249	252	254	255
R27	216	219	220	223	226	232	233	235	239	240	241	243	245	246	247	251	252	257	259	261	262	263	265	267
R28	200	201	202	204	205	206	209	210	211	212	217	219	220	222	225	226	227	229	232	233	234	235	238	239
R29	201	204	206	207	208	210	211	212	213	215	217	219	220	222	223	224	225	227	229	231	232	235	236	241
R30	247	249	250	251	252	254	255	259	260	261	262	263	264	265	266	267	275	279	282	284	285	286	287	290
R31	229	230	233	236	239	242	245	246	247	249	251	252	253	255	256	257	258	260	261	262	265	277	283	286
R32	235	236	238	239	241	243	246	251	252	255	259	260	261	264	267	270	271	277	279	281	284	285	286	287
R33	265	266	267	268	270	271	273	275	277	279	286	287	291	292	295	298	301	303	306	311	314	315	317	318
R34	230	231	233	236	237	238	242	244	245	248	249	250	252	254	256	258	259	263	265	267	272	273	274	275
R35	210	211	212	213	214	215	217	219	220	222	224	225	227	229	230	232	236	239	241	243	245	247	249	252
R36	212	213	214	215	216	217	219	221	226	227	232	235	237	238	241	242	245	246	249	251	252	253	254	256
R37	219	220	223	224	232	233	234	235	236	238	239	241	242	247	249	251	252	254	255	256	258	259	263	264
R38	212	213	214	215	216	217	219	220	222	223	225	226	227	228	230	232	233	235	236	237	238	240	241	242
R39	211	212	213	214	215	216	220	222	223	225	226	229	230	232	233	234	235	236	238	240	241	245	247	248
R40	257	259	263	264	265	266	268	269	270	286	288	290	291	292	294	295	296	298	299	301	302	304	305	312
R41	213	217	219	221	222	225	226	227	229	230	231	232	233	236	238	240	241	246	247	248	249	253	254	255
R42	187	188	190	191	192	193	194	197	198	200	201	202	204	206	210	211	212	214	215	216	217	219	220	221
R43	241	245	251	252	253	255	260	263	270	272	274	276	277	278	281	282	283	284	285	287	293	294	295	296
R44	212	213	214	219	220	221	222	223	224	225	227	231	232	234	238	239	241	246	248	249	251	253	255	256
R45	216	221	225	229	230	232	235	236	239	240	241	243	245	247	248	249	252	253	256	257	258	260	261	262
R46	225	229	231	232	234	238	239	240	241	247	250	251	257	259	261	262	264	265	266	271	275	277	282	285
R47	257	261	262	268	269	271	273	275	279	280	281	285	286	287	288	290	291	296	301	302	304	305	308	309
R48	230	232	234	238	239	240	243	244	245	247	249	251	253	254	257	259	261	262	264	266	267	268	270	271
R49	219	220	221	223	225	226	228	230	233	234	236	238	239	240	241	244	246	248	251	257	260	261	262	263
R50	250	251	252	254	255	257	258	260	262	263	267	268	269	270	271	272	273	274	275	276	277	278	280	282
R51	248	249	252	254	255	256	257	258	261	262	264	265	266	267	268	269	270	271	272	273	274	276	278	279
R52	212	213	217	220	222	224	227	229	234	235	237	239	242	243	245	247	252	255	258	260	261	265	266	268
R53	229	235	236	242	243	245	249	252	253	256	257	258	262	265	269	270	271	272	274	276	278	282	285	289
R54	206	207	209	210	211	212	213	214	219	222	223	224	225	226	227	231	232	234	238	240	241	245	248	252
R55	211	212	213	214	217	219	220	221	223	224	227	237	242	243	247	248	251	254	259	264	265	266	268	270
R56	259	260	262	264	268	269	277	279	282	283	284	285	286	287	288	289	290	292	295	296	297	298	303	305
R57	210	211	212	213	216	219	220	222	225	226	227	229	231	234	236	238	242	243	244	249	250	251	252	254
R58	194	203	205	209	213	214	216	221	223	232	233	234	235	236	239	241	244	245	246	247	248	252	253	255
R59																								
R60	225	226	228	229	230	231	233	234	239	243	244	245	246	249	250	253	255	256	258	260	263	264	265	266

Copyright © 2005 IEEE. All rights reserved.
This is an unapproved draft, subject to change

Table 55A–2—P matrix: location 25 to 48

	C25	C26	C27	C28	C29	C30	C31	C32	C33	C34	C35	C36	C37	C38	C39	C40	C41	C42	C43	C44	C45	C46	C47	C48
R61	202	204	206	208	209	210	211	212	213	214	217	219	220	222	223	224	225	227	229	230	236	238	239	240
R62	224	226	230	231	232	233	235	236	240	241	243	247	251	255	260	263	265	266	271	275	277	278	279	280
R63	238	240	241	242	243	244	246	250	252	253	255	257	261	262	265	271	272	274	275	276	278	279	280	281
R64	218	219	221	223	225	226	228	232	233	236	237	239	242	243	244	247	248	249	250	254	255	260	261	264
R65	230	232	235	236	237	240	241	242	243	244	248	249	250	251	252	254	255	256	257	258	261	262	263	264
R66	207	209	210	211	212	213	214	216	217	219	222	223	224	225	227	230	239	242	243	244	245	247	248	250
R67	206	207	208	209	210	211	212	213	214	215	217	219	220	221	222	225	226	227	229	230	232	235	238	239
R68	235	236	240	241	248	251	252	255	257	259	260	261	262	265	266	267	268	269	270	272	274	276	277	278
R69	217	219	221	224	226	231	233	234	239	243	245	246	247	251	252	253	255	256	258	261	264	266	270	277
R70	214	217	224	226	231	232	234	235	236	239	242	243	245	246	247	248	249	251	252	253	254	255	256	258
R71	209	213	214	216	220	224	225	227	229	230	231	240	242	245	246	248	249	250	252	253	255	256	258	259
R72	317	318	319	320	323	324	325																	
R73	243	244	245	247	249	250	253	254	255	256	257	258	259	260	262	264	265	267	268	269	270	272	274	275
R74	190	191	200	205	214	215	216	219	221	225	226	229	230	234	235	238	240	241	242	243	244	247	248	253
R75	312	314	316	319	320	324	325																	
R76	226	228	230	232	233	235	236	237	241	242	245	246	251	253	254	259	261	264	267	269	270	272	273	274
R77	224	225	230	233	235	236	237	238	240	241	247	251	253	255	256	258	259	261	267	268	269	270	273	281
R78	201	202	203	204	206	208	209	210	212	214	216	217	219	220	226	227	229	230	231	233	234	237	238	242
R79	191	192	193	194	197	199	201	203	204	206	207	208	209	210	211	212	213	215	216	217	218	221	222	224
R80	231	232	233	234	235	236	237	238	239	241	242	246	247	248	249	251	254	255	256	257	258	262	263	264
R81	208	216	219	222	229	232	233	236	237	240	241	242	243	244	247	248	250	254	255	257	258	261	262	264
R82	209	210	211	212	213	216	217	219	220	221	222	225	227	232	234	236	238	240	241	243	246	247	248	252
R83	200	201	202	204	205	206	207	208	209	210	211	212	213	219	220	221	222	225	227	229	230	231	232	234
R84	191	193	195	197	198	199	200	201	202	203	204	205	206	207	209	210	211	212	213	214	216	219	220	221
R85	207	208	209	210	211	212	213	216	217	219	221	223	225	227	229	230	232	235	236	237	239	241	242	243
R86	219	221	223	224	225	230	231	235	236	237	239	240	242	243	244	245	246	250	252	255	259	260	264	267
R87	217	218	221	223	224	225	228	230	231	233	234	235	236	244	245	247	250	253	254	257	262	263	264	265
R88	219	220	224	225	226	227	229	230	231	232	233	234	235	236	237	239	240	241	245	246	247	248	249	250
R89	211	212	215	217	219	220	222	223	227	229	230	233	236	238	244	246	247	248	249	250	252	253	256	257
R90	212	215	219	222	223	225	227	228	229	231	233	236	238	240	241	242	243	244	245	246	247	248	250	255
R91	199	203	213	215	222	223	225	226	230	236	237	238	242	243	244	247	248	250	252	254	257	260	261	264
R92	221	223	224	226	233	234	235	237	239	242	245	248	249	250	251	252	253	254	255	256	258	259	261	262
R93																								
R94	245	246	247	250	252	253	254	257	259	260	262	263	264	268	269	270	271	272	274	275	276	278	280	282
R95	209	210	211	212	213	214	215	216	217	220	222	224	225	226	232	233	234	236	239	241	243	244	245	247
R96	220	222	223	224	225	227	229	230	233	234	236	240	241	243	247	250	253	254	255	259	264	269	271	273
R97	237	239	242	245	246	247	250	252	255	257	259	260	261	262	263	264	267	270	272	273	274	276	278	281
R98	212	213	214	217	219	220	221	222	223	225	226	227	230	232	235	236	240	241	244	245	246	247	248	254
R99	229	230	231	232	235	236	237	239	241	242	243	244	247	248	251	254	255	259	263	268	269	277	280	281
R100	214	215	216	217	220	221	222	223	226	227	229	230	231	233	234	235	240	244	246	248	250	251	253	259
R101	221	223	224	226	230	232	233	234	236	238	240	241	243	244	245	246	247	248	249	252	255	256	258	264
R102	226	230	231	232	234	239	241	242	243	245	246	251	252	255	258	259	260	263	266	267	270	271	272	274
R103	217	220	222	223	225	226	227	229	230	232	233	235	236	239	240	241	243	245	246	248	249	251	252	253
R104	213	214	219	220	221	222	224	225	227	230	231	232	234	235	236	239	240	241	242	243	244	245	246	247
R105	213	214	216	217	220	221	223	224	225	226	229	231	233	234	237	238	242	246	247	248	256	258	260	261
R106	204	205	206	207	209	210	211	212	213	214	216	217	219	220	222	224	225	227	229	239	240	241	244	247
R107	213	214	215	224	226	233	234	235	236	238	239	242	247	248	251	252	253	255	257	261	262	263	264	265
R108	252	253	254	260	263	264	265	266	267	270	275	279	280	281	282	288	292	293	294	295	297	298	299	301
R109	212	213	214	217	219	221	222	224	225	227	229	230	231	233	234	238	242	243	244	247	248	249	250	251
R110	237	238	239	242	243	244	245	248	250	253	254	255	263	264	265	266	268	269	270	271	272	274	275	276
R111	238	243	244	247	250	251	260	266	267	268	269	270	271	273	281	282	283	284	285	286	288	289	293	294
R112	215	216	217	223	224	226	235	240	241	243	244	245	246	248	251	253	255	256	258	259	261	266	267	269
R113	214	216	219	225	235	236	237	240	241	246	251	253	255	261	263	271	273	280	282	284	285	286	291	292
R114	205	207	220	223	224	226	229	233	236	238	240	242	243	245	246	247	248	249	250	251	253	254	255	256
R115	220	223	224	226	227	230	233	234	237	239	240	242	244	246	247	248	250	254	257	259	261	262	263	264
R116	255	260	261	265	266	267	270	272	273	274	275	276	277	278	280	281	283	284	288	289	290	293	294	295
R117	169	173	174	175	181	182	183	185	186	187	190	194	196	197	198	199	201	202	203	204	206	207	208	210
R118	198	202	203	205	208	214	215	217	229	231	233	235	236	237	238	239	241	248	251	252	253	254	255	259
R119	202	205	214	217	222	224	231	232	233	234	235	236	240	241	243	245	246	247	249	251	252	255	257	258
R120	230	233	236	238	243	244	246	250	252	254	257	260	261	262	263	267	268	269	271	272	273	274	276	278

Copyright © 2005 IEEE. All rights reserved.
This is an unapproved draft, subject to change

Table 55A–2—P matrix: location 25 to 48

	C25	C26	C27	C28	C29	C30	C31	C32	C33	C34	C35	C36	C37	C38	C39	C40	C41	C42	C43	C44	C45	C46	C47	C48
R121	210	212	214	215	216	220	221	222	225	226	227	229	231	233	235	236	238	239	240	244	248	249	250	251
R122	228	229	230	231	232	233	235	236	237	240	241	242	244	246	247	248	249	250	252	253	255	256	257	258
R123	280	285	286	287	289	290	294	295	296	299	302	304	306	309	313	315	319	321	322					
R124	221	223	226	228	229	230	233	234	235	236	244	245	246	247	248	249	250	251	257	261	262	263	264	268
R125	188	190	191	195	196	198	199	202	209	213	214	221	223	224	225	229	230	235	236	237	238	239	243	250
R126	212	213	214	217	219	220	222	223	225	229	231	232	235	240	241	243	245	251	252	253	255	260	262	265
R127	207	210	211	212	213	217	218	219	221	222	223	226	227	229	232	238	241	242	243	245	249	256	257	258
R128	273	275	277	279	281	285	286	291	292	295	297	302	303	304	306	310	311	312	313	314	315	316	318	319
R129	251	252	254	256	257	258	259	261	262	263	264	271	275	279	280	282	283	286	287	288	289	293	294	297
R130	208	209	210	211	212	213	217	219	220	221	222	223	225	226	227	229	231	236	238	239	242	243	245	246
R131	208	209	210	211	212	213	214	215	216	217	219	220	222	223	224	225	227	228	229	230	232	236	239	241
R132	236	237	239	240	242	243	244	245	246	247	248	249	251	256	258	261	263	264	265	266	267	270	272	274
R133	206	207	209	210	211	212	213	217	219	220	221	222	223	224	225	226	227	232	235	238	239	240	241	243
R134	201	203	204	206	207	208	209	210	211	212	214	215	216	219	221	222	227	229	231	234	235	239	240	243
R135	223	225	229	231	233	234	237	238	240	241	242	244	246	247	250	253	255	259	263	264	268	269	273	276
R136	232	233	234	235	236	239	240	241	244	245	247	248	250	257	259	260	261	262	266	267	271	273	280	282
R137	214	217	221	222	223	226	227	229	230	232	233	234	235	238	239	240	242	244	245	247	249	250	251	253
R138	193	195	203	204	208	209	214	217	221	223	225	229	230	231	234	235	236	239	240	244	246	247	248	250
R139	206	209	210	211	212	215	216	217	219	220	221	222	223	226	227	232	234	236	238	240	241	243	244	250
R140	217	223	224	229	231	232	233	235	236	238	239	241	246	248	249	255	257	261	262	264	271	272	273	275
R141	213	214	216	219	220	221	222	224	225	226	227	229	232	241	242	245	246	247	251	256	257	258	262	263
R142	233	234	236	238	239	243	244	245	247	250	251	252	253	254	255	257	258	260	262	263	265	266	268	281
R143	203	208	223	224	225	226	230	231	232	234	235	236	240	241	242	243	244	249	250	251	253	255	256	257
R144	213	215	217	219	220	222	224	225	226	227	230	231	233	234	235	242	243	244	245	247	248	249	254	256
R145	263	267	272	274	275	276	278	279	281	282	283	284	286	289	290	291	292	297	298	301	303	304	306	309
R146	251	253	254	257	260	262	264	265	267	268	270	272	274	276	278	280	281	283	284	285	289	291	297	300
R147	240	241	242	245	251	255	263	266	268	269	270	272	274	276	278	279	280	282	283	285	286	287	290	293
R148	212	213	214	217	220	223	224	227	229	233	236	237	240	242	243	245	246	253	259	263	264	269	271	273
R149	199	202	203	208	213	214	216	221	222	223	226	232	233	235	237	238	240	241	242	243	244	246	247	249
R150	224	228	229	231	232	233	235	238	240	241	244	245	246	247	249	254	255	256	258	265	266	268	269	271
R151	253	254	255	256	257	258	259	260	262	263	265	267	268	269	273	277	278	281	282	283	284	286	288	289
R152	250	251	253	254	257	259	264	267	268	269	270	271	272	273	274	275	276	277	278	280	281	282	283	284
R153	238	239	240	243	244	246	249	250	252	253	254	256	258	259	266	267	272	273	274	276	278	280	281	288
R154	223	232	235	236	241	244	245	247	250	254	259	262	264	265	266	267	268	269	270	272	274	275	276	278
R155	242	244	245	246	247	250	253	254	255	257	259	261	263	265	266	268	269	280	289	292	294	295	296	297
R156	210	211	212	213	214	215	220	222	223	224	233	234	237	238	240	242	243	245	248	249	253	254	255	257
R157	245	247	250	251	253	254	257	259	262	264	265	266	268	269	272	273	274	276	278	279	281	282	283	284
R158	225	226	227	229	233	234	235	236	243	244	251	252	253	254	256	257	258	259	262	263	264	265	266	267
R159	245	247	250	252	253	257	259	260	261	265	266	267	268	269	271	275	277	281	288	289	290	291	292	293
R160	226	229	230	232	233	234	235	236	239	241	242	243	244	245	247	250	253	255	256	258	259	260	263	264
R161	211	213	214	217	218	219	221	223	225	228	229	231	235	238	240	243	245	249	252	254	255	256	258	259
R162	197	199	200	201	202	203	204	205	206	207	209	210	211	212	213	214	216	217	219	220	223	225	226	227
R163	243	244	247	248	250	251	252	254	256	258	259	263	273	275	279	280	281	282	283	284	285	286	288	291
R164	203	204	205	206	208	209	210	212	213	214	215	216	217	219	220	221	222	225	227	229	230	232	234	235
R165	210	211	212	213	214	215	216	217	218	221	222	223	224	227	230	232	234	236	240	241	246	248	253	254
R166	212	213	214	216	217	219	222	224	225	226	227	228	232	234	236	239	241	243	246	247	248	249	251	252
R167	232	233	235	237	238	239	241	242	245	246	247	248	249	251	254	255	256	257	258	259	260	261	262	263
R168	254	255	256	258	259	260	264	267	268	270	272	273	274	275	276	277	280	286	288	289	291	293	294	295
R169	243	244	250	251	252	253	254	257	259	260	261	262	264	266	268	269	270	277	279	289	290	291	292	298
R170	214	216	217	223	226	231	232	233	234	235	236	237	238	240	241	244	245	246	249	250	251	252	255	257
R171	203	204	206	208	209	210	211	212	213	214	215	219	220	221	222	223	224	226	227	229	230	239	240	245
R172	213	214	217	219	220	222	225	226	227	230	235	238	239	242	244	245	247	248	253	255	257	261	262	263
R173	210	211	212	213	217	219	220	221	222	224	225	226	227	229	230	233	235	238	243	245	246	247	252	260
R174	214	216	223	224	225	232	233	234	236	241	242	243	246	247	249	250	252	256	257	258	261	262	263	265
R175	191	205	209	213	216	223	224	226	229	233	234	235	236	237	246	250	252	254	257	259	261	264	266	267
R176	293	297	299	301	305	307	308	309	312	313	315	316	317	321	322									
R177	238	239	241	242	246	251	253	254	255	257	259	260	262	264	265	266	267	268	269	270	279	280	281	283
R178	208	216	219	222	223	225	226	229	232	234	237	240	241	242	243	245	246	247	248	249	250	253	254	261
R179	202	203	204	206	209	210	211	212	213	216	220	222	223	225	227	232	234	236	240	241	246	247	249	251
R180	208	209	210	211	212	213	216	217	219	221	222	224	226	227	228	232	235	238	241	242	246	248	252	253

Copyright © 2005 IEEE. All rights reserved.
This is an unapproved draft, subject to change

Table 55A–2—P matrix: location 25 to 48

	C25	C26	C27	C28	C29	C30	C31	C32	C33	C34	C35	C36	C37	C38	C39	C40	C41	C42	C43	C44	C45	C46	C47	C48
R181	198	199	200	201	202	203	204	206	207	209	210	211	212	213	214	219	220	221	227	229	230	231	232	233
R182	228	229	233	234	235	236	238	240	244	247	248	249	252	261	265	267	270	273	275	277	280	282	285	287
R183	248	250	251	258	259	261	262	263	268	269	270	271	277	280	281	282	284	288	290	291	292	294	296	298
R184	238	240	241	247	248	253	254	255	261	263	264	265	266	271	272	274	275	276	277	278	280	281	283	284
R185	233	236	238	241	242	244	247	248	250	254	255	257	263	264	265	267	269	270	273	275	279	280	285	286
R186	191	192	193	194	198	202	203	205	216	217	221	223	224	225	229	231	238	242	243	247	248	250	253	254
R187	207	208	209	210	211	212	213	215	216	217	219	220	222	225	227	232	236	238	240	241	243	245	247	248
R188	216	218	219	222	225	226	227	228	229	231	232	234	240	241	242	243	245	246	248	253	254	255	262	265
R189	257	258	259	260	262	263	264	270	271	272	274	276	278	279	281	282	285	287	289	290	292	297	298	299
R190	197	198	199	200	201	202	203	204	205	206	207	209	210	211	212	213	214	216	219	221	222	224	225	226
R191	242	244	247	248	249	250	252	254	255	256	258	259	260	261	265	266	267	268	269	270	272	274	275	276
R192	204	205	206	209	210	211	212	214	215	216	217	219	220	222	223	224	226	227	229	232	233	236	239	241
R193	235	236	240	241	243	245	251	252	253	254	255	257	260	263	270	271	275	276	279	280	288	289	290	291
R194	199	202	203	205	213	215	220	224	228	231	232	233	234	235	236	238	239	240	241	242	247	251	253	254
R195	187	193	196	197	198	199	200	201	202	203	204	205	206	207	209	210	211	212	213	214	221	222	223	227
R196	207	208	209	210	211	212	213	214	216	217	219	220	221	222	224	225	227	229	230	231	232	239	241	244
R197	245	246	247	249	251	256	257	258	259	260	262	263	264	268	269	271	279	281	282	283	285	287	288	289
R198	217	219	222	223	224	225	227	230	231	235	236	244	245	248	249	250	251	254	256	258	259	260	261	262
R199	199	201	202	204	205	206	207	209	210	211	212	214	215	217	218	219	221	222	227	230	231	234	235	236
R200	217	219	229	231	232	235	236	242	244	248	249	253	254	257	258	261	262	263	264	265	266	267	273	275
R201	208	209	210	211	212	214	217	219	220	222	224	226	227	228	230	234	239	243	246	250	253	255	257	262
R202	210	211	212	214	217	219	220	222	223	225	227	233	235	238	239	242	243	245	246	247	249	251	252	253
R203	204	205	206	207	209	210	211	212	214	215	216	217	218	219	222	223	224	227	230	231	232	233	236	238
R204	245	246	248	251	254	255	256	257	258	259	260	261	262	263	265	268	269	270	273	280	281	283	284	285
R205	204	205	206	207	208	209	210	211	212	214	216	217	219	220	225	227	229	233	235	237	240	242	246	248
R206	204	205	206	207	208	209	210	211	212	213	217	219	220	223	226	227	228	232	233	234	236	237	238	239
R207	240	241	244	246	247	248	249	250	252	253	256	257	258	259	262	263	264	265	266	268	269	270	272	274
R208	215	216	224	225	226	228	230	232	234	235	241	244	245	246	247	249	250	251	253	257	262	263	266	267
R209	237	239	240	241	242	244	245	246	249	250	254	257	260	262	263	267	269	273	275	277	282	287	288	289
R210	207	208	210	211	212	213	215	216	219	220	221	227	229	230	231	236	237	238	239	240	242	244	246	250
R211	270	272	273	274	275	276	277	278	281	283	284	289	290	292	293	294	295	296	297	298	301	302	303	304
R212	225	229	230	232	233	237	241	242	243	245	246	247	248	252	253	264	266	267	271	275	280	281	282	284
R213	217	231	234	237	240	242	246	249	250	252	255	259	261	262	263	264	265	266	267	268	269	270	272	273
R214	243	246	248	249	250	251	255	256	257	258	259	260	261	262	263	267	268	269	270	272	273	274	275	276
R215	249	250	253	254	261	265	266	273	275	280	282	284	287	289	293	297	299	300	302	303	306	307	311	314
R216	208	209	210	211	212	213	217	219	220	221	222	224	227	230	231	234	235	236	238	239	240	242	243	244
R217	211	214	217	218	219	222	225	226	228	229	230	231	232	235	236	237	239	240	241	242	246	248	249	253
R218	320	322	323	324	325																			
R219	214	217	221	223	226	231	232	233	234	235	236	238	239	240	241	242	244	246	249	250	251	252	256	258
R220	212	213	214	215	216	219	221	222	223	224	225	227	228	230	231	232	233	239	240	243	245	246	248	251
R221	264	265	266	268	273	275	281	282	285	286	287	289	290	292	294	295	296	298	300	302	304	305	306	309
R222	216	217	219	222	223	224	225	228	231	236	238	240	243	248	253	254	255	257	264	265	269	270	271	275
R223	266	270	271	272	274	276	278	279	283	284	285	286	287	291	292	293	295	301	305	306	308	311	312	313
R224	203	204	205	206	209	210	211	212	213	215	219	221	222	223	227	230	231	233	236	239	248	249	251	253
R225	189	192	194	199	200	202	203	205	207	211	213	214	218	219	220	221	224	225	226	229	230	239	241	244
R226	185	187	188	189	190	196	197	200	201	204	206	207	208	209	210	211	212	213	214	215	219	220	222	224
R227	203	205	208	214	215	216	217	223	224	228	229	231	235	236	237	238	244	246	248	249	250	251	253	256
R228	240	244	246	247	248	249	250	251	252	253	256	258	259	263	268	269	271	273	275	280	283	286	288	292
R229	235	238	241	243	245	248	252	254	257	259	261	262	263	266	271	272	273	274	275	276	277	278	280	281
R230	233	235	236	238	241	243	244	245	246	248	249	250	251	252	254	257	259	260	262	267	271	272	273	274
R231	210	212	214	217	218	219	221	222	223	224	225	227	230	238	243	244	246	247	249	250	252	253	256	258
R232	201	202	204	205	206	207	209	210	211	212	213	217	218	222	224	227	229	230	232	233	235	236	241	243
R233	207	209	210	211	212	213	214	215	216	220	221	224	226	227	230	231	234	236	238	243	245	248	251	253
R234	237	241	242	247	249	251	252	253	256	257	258	260	261	262	263	265	267	270	272	273	274	276	277	278
R235	193	194	197	198	199	200	201	202	203	204	205	206	207	208	209	210	211	212	213	216	217	219	220	222
R236	222	224	225	228	229	230	231	233	236	237	238	239	240	242	243	245	246	247	251	254	257	262	263	265
R237	201	202	203	204	206	209	210	211	212	213	214	215	216	217	219	220	221	222	224	225	227	229	230	232
R238	223	224	230	232	233	235	236	237	238	242	243	246	247	248	249	250	253	254	256	258	259	263	265	266
R239	242	243	244	245	246	247	250	252	256	258	261	263	268	269	277	281	283	284	288	290	291	292	293	294
R240	266	270	279	282	284	286	289	290	291	292	293	294	296	298	299	300	301	302	304	305	306	307	308	309

Copyright © 2005 IEEE. All rights reserved.
This is an unapproved draft, subject to change

Table 55A–2—P matrix: location 25 to 48

	C25	C26	C27	C28	C29	C30	C31	C32	C33	C34	C35	C36	C37	C38	C39	C40	C41	C42	C43	C44	C45	C46	C47	C48
R241	202	203	205	208	223	225	226	230	234	238	240	242	244	247	249	252	253	254	255	256	257	258	259	261
R242	239	240	241	244	245	247	248	250	251	252	257	260	261	262	264	266	267	269	274	277	278	279	280	281
R243	211	212	216	217	219	220	222	223	227	230	232	234	241	247	249	251	254	256	257	258	260	261	262	263
R244	213	214	216	217	219	220	222	223	224	225	226	227	229	230	231	232	233	236	239	241	242	244	246	247
R245	212	213	214	217	219	220	221	222	223	224	227	231	233	234	236	238	240	244	246	248	249	251	254	255
R246	226	229	230	232	233	235	238	241	242	246	247	250	251	257	259	260	261	262	270	271	275	277	280	281
R247	221	224	227	228	230	231	233	234	235	236	237	239	240	243	245	246	248	252	253	257	260	262	263	264
R248	213	214	216	217	220	223	226	227	228	230	232	235	237	238	239	241	242	244	248	249	250	251	256	257
R249	198	199	202	208	216	217	221	224	226	229	230	231	235	237	239	242	243	244	245	247	249	253	254	255
R250	209	210	211	212	213	214	215	219	220	222	223	224	225	226	227	231	232	239	240	241	244	245	246	247
R251	226	229	230	231	232	234	235	241	244	248	249	250	251	256	257	258	260	261	262	263	264	267	270	271
R252	208	213	215	221	223	224	230	233	235	238	240	245	247	248	249	252	253	254	255	257	259	261	262	263
R253	212	213	214	217	219	220	221	222	224	225	227	229	230	232	233	237	240	242	243	244	246	249	250	252
R254	247	248	251	253	255	256	257	258	259	260	263	272	274	275	276	277	278	279	280	282	285	286	287	288
R255	203	204	206	207	208	209	210	211	212	213	214	215	216	217	221	222	225	231	232	234	235	236	238	240
R256	209	210	211	212	213	215	216	217	219	220	222	224	225	227	229	230	232	233	235	238	240	243	244	249
R257	197	198	199	200	201	202	203	204	205	206	207	209	210	211	212	213	217	219	221	222	223	224	225	226
R258	201	203	204	206	207	209	210	211	212	217	219	220	221	222	226	227	229	230	233	235	239	246	247	248
R259	216	217	219	225	229	230	235	244	245	246	248	249	250	253	254	257	260	262	264	266	267	268	269	271
R260	235	236	238	240	242	243	244	249	250	252	254	255	256	258	261	263	265	266	267	268	269	271	272	274
R261	248	251	252	254	257	260	261	262	264	265	266	268	269	272	274	276	278	279	280	281	283	284	285	288
R262	200	201	202	203	204	206	207	209	210	211	212	213	214	215	216	217	218	219	222	224	225	226	227	229
R263	243	244	246	247	248	250	251	253	254	255	256	258	259	260	261	266	271	272	273	274	275	276	277	278
R264	248	250	251	252	253	257	260	262	275	277	280	281	282	289	290	291	292	293	297	298	299	302	305	309
R265	211	212	213	214	217	219	220	222	224	227	230	233	236	238	239	245	248	251	252	253	255	257	260	261
R266	229	231	232	233	236	237	238	240	241	242	244	246	247	248	252	253	254	255	257	261	262	264	266	267
R267	245	250	253	254	257	258	259	261	262	264	266	267	270	271	275	277	280	289	291	292	295	298	299	300
R268	194	195	196	197	199	200	201	206	207	208	210	211	212	213	214	215	216	217	219	220	222	224	225	227
R269	231	232	233	234	236	239	240	241	242	243	245	246	247	248	249	251	252	254	256	257	258	260	261	262
R270	226	227	229	231	233	234	236	238	241	246	247	249	251	252	253	256	258	265	266	267	269	272	273	274
R271	236	237	239	244	245	247	248	250	253	254	255	257	259	260	261	262	263	267	268	269	270	271	272	274
R272	201	203	204	206	207	209	210	211	212	213	214	215	217	220	222	226	230	231	235	238	239	240	244	248
R273	225	229	232	234	238	241	242	243	244	245	246	247	248	249	250	253	254	256	258	259	260	263	265	268
R274	234	235	239	240	243	244	248	250	252	254	257	258	260	264	265	266	268	269	271	275	281	282	284	287
R275	223	224	225	226	229	230	234	235	239	254	255	256	257	258	259	260	262	267	270	272	274	276	277	278
R276	242	246	247	248	250	254	259	260	263	265	266	268	269	270	277	279	281	282	285	287	289	292	293	297
R277	229	231	233	234	235	236	240	244	247	248	249	250	253	255	256	257	258	259	260	262	267	268	269	271
R278	192	198	202	203	205	207	208	215	217	223	224	225	229	231	232	235	238	239	241	242	243	245	246	247
R279	207	209	210	211	212	213	215	216	219	220	221	222	223	224	225	227	229	230	231	235	236	237	238	239
R280	212	213	214	216	219	220	221	222	223	225	226	227	230	231	233	235	238	243	245	246	247	248	249	251
R281	196	199	213	215	220	223	224	228	230	231	234	235	238	247	248	253	257	261	262	263	264	265	268	269
R282	210	211	212	213	215	217	219	220	221	222	223	226	227	230	233	239	243	244	245	246	247	248	253	255
R283	205	206	207	210	211	212	213	219	220	222	223	224	227	229	231	232	233	234	235	236	237	238	241	242
R284	216	219	220	222	223	225	226	227	229	230	231	233	235	239	240	243	244	245	246	247	249	251	252	254
R285	201	203	204	206	207	208	209	210	211	212	214	216	217	220	222	223	225	226	227	228	230	233	235	236
R286	234	238	241	243	246	251	252	257	259	260	262	266	267	271	272	273	274	275	276	277	278	279	280	281
R287	214	216	221	224	225	226	229	230	232	236	238	239	241	242	245	246	247	252	253	254	255	257	258	261
R288	208	216	223	224	232	233	234	235	236	238	240	241	243	244	245	247	249	250	251	253	254	255	257	259
R289	206	207	209	210	211	212	213	217	219	221	222	225	227	230	235	238	239	245	250	253	255	259	263	264
R290	230	231	232	234	238	242	243	244	245	246	247	248	250	251	254	261	263	264	265	266	267	272	273	274
R291	243	248	249	252	254	256	258	259	260	261	262	263	266	271	272	273	274	276	277	278	281	282	283	285
R292	240	243	244	246	248	249	250	251	254	255	256	257	258	260	262	265	266	268	270	272	274	276	277	278
R293	224	226	231	232	233	234	235	237	238	242	243	244	245	246	247	254	257	260	261	265	268	269	272	273
R294	202	203	205	216	219	224	225	229	230	232	234	235	238	240	241	245	247	248	255	257	258	261	262	263
R295	237	238	239	241	243	244	245	250	251	255	259	261	263	264	271	272	273	274	276	277	278	279	281	283
R296	200	201	202	203	204	206	207	209	210	211	212	213	214	215	217	219	220	223	224	225	226	227	231	232
R297	291	299	303	305	308	309	311	312	314	315	316	317	318	319	320	321	322	323	325					
R298	210	211	212	213	217	219	222	223	227	229	231	234	236	238	239	240	247	249	253	254	256	257	258	260
R299	199	200	201	202	203	204	205	206	207	209	210	211	212	213	214	215	216	217	219	220	224	227	231	233
R300	219	220	221	222	224	225	227	229	231	232	233	234	235	236	239	241	243	244	245	250	251	253	254	255

Copyright © 2005 IEEE. All rights reserved.
This is an unapproved draft, subject to change

Table 55A–2—P matrix: location 25 to 48

	C25	C26	C27	C28	C29	C30	C31	C32	C33	C34	C35	C36	C37	C38	C39	C40	C41	C42	C43	C44	C45	C46	C47	C48
R301	206	207	209	210	211	212	217	219	220	222	224	227	230	233	234	235	236	238	240	243	245	246	247	249
R302	250	252	253	254	255	257	259	260	261	262	263	272	274	275	276	278	280	283	284	290	293	294	295	296
R303	195	197	199	200	201	204	206	207	209	210	211	212	213	215	217	218	219	222	223	224	227	240	242	244
R304	216	217	219	221	222	223	224	226	227	228	229	230	232	236	241	243	245	252	259	260	261	263	265	266
R305	211	212	213	214	217	219	220	223	224	225	227	229	233	237	238	239	243	244	246	247	249	253	254	255
R306	200	201	203	204	206	207	209	210	211	212	213	214	217	219	221	224	227	229	230	233	234	239	240	243
R307	197	198	199	200	201	202	203	204	205	206	207	209	210	211	212	213	214	217	219	220	221	222	225	226
R308	248	251	252	253	257	260	262	263	267	268	269	270	274	275	278	280	283	288	291	296	298	300	302	304
R309	240	241	243	244	245	246	250	251	254	255	256	257	258	262	265	266	267	268	270	271	273	275	277	283
R310	209	210	211	212	214	215	216	217	219	220	222	225	227	229	230	235	236	240	241	245	247	248	249	251
R311	246	247	249	250	253	255	256	258	259	260	263	264	265	266	268	269	271	273	275	277	280	282	286	290
R312	224	225	226	229	232	234	235	236	238	240	241	244	246	247	248	250	256	257	258	260	262	263	264	267
R313																								
R314	212	213	214	215	216	217	219	220	225	227	228	232	233	234	235	237	241	242	243	244	248	250	251	252
R315	206	207	209	210	211	212	213	214	215	220	221	222	224	226	227	230	232	233	234	235	236	238	241	243
R316	222	223	224	225	228	229	230	231	232	233	235	236	237	241	242	243	244	245	246	251	252	253	256	258
R317	238	240	241	244	245	246	247	249	250	251	253	254	259	260	261	264	268	271	272	273	274	276	277	278
R318	215	216	217	219	221	222	223	225	226	229	231	233	239	243	244	245	247	248	249	250	254	255	256	257
R319	221	225	229	230	232	234	238	241	245	247	248	249	251	253	254	256	258	259	260	261	265	266	267	268
R320	231	232	233	235	236	238	239	241	243	246	249	250	251	254	255	256	257	258	259	260	262	263	264	268
R321	221	224	228	232	233	234	235	236	238	240	241	242	244	246	247	254	255	257	261	262	264	265	267	271
R322	236	238	239	240	241	244	246	247	248	249	250	251	253	256	257	260	261	264	265	266	267	271	273	275
R323	237	238	240	241	244	245	247	249	250	251	252	254	255	256	258	259	265	267	268	269	272	274	275	276
R324	211	212	214	216	217	219	220	227	232	234	235	237	238	239	241	242	243	244	245	251	253	255	259	264
R325	226	229	231	235	236	238	243	244	245	247	248	249	252	254	257	258	261	262	264	265	267	272	274	276
R326	206	207	210	211	212	213	214	215	216	219	222	224	225	226	227	231	233	237	238	240	242	243	246	247
R327	194	195	196	197	198	200	201	202	204	205	206	207	208	209	210	211	212	213	214	219	220	221	222	227
R328	211	212	213	214	217	219	220	222	223	225	227	229	232	233	234	235	236	240	241	243	245	246	247	251
R329	199	200	201	204	206	207	209	210	211	212	214	217	219	220	222	230	231	232	233	235	239	242	244	245
R330	213	215	217	219	220	222	223	224	227	229	234	235	238	240	243	244	247	250	251	255	260	261	265	266
R331	234	235	236	237	238	239	242	243	244	245	247	248	249	250	251	255	256	257	258	262	264	266	268	269
R332	227	228	231	232	233	236	238	239	240	241	243	248	249	252	254	256	258	265	267	268	270	271	273	277
R333	239	240	242	245	247	251	253	259	264	265	266	267	268	269	270	271	282	284	285	291	292	293	294	296
R334	212	213	214	216	220	222	223	224	225	226	227	228	230	231	233	236	240	243	244	248	250	251	252	253
R335	209	214	215	220	221	223	226	227	229	230	231	233	235	239	246	248	252	253	254	255	259	261	264	266
R336	209	210	211	212	213	217	219	220	222	223	225	227	231	232	233	234	235	236	240	241	242	244	247	248
R337	211	212	213	214	216	217	219	222	223	226	227	228	230	232	235	238	239	241	244	246	247	248	250	252
R338	201	203	204	206	207	209	210	211	212	213	216	219	220	222	224	227	229	231	234	235	240	241	243	245
R339	233	234	236	237	238	241	242	244	246	248	250	252	254	256	258	259	263	265	266	267	268	269	272	274
R340	203	204	205	206	210	212	213	215	216	217	219	220	222	223	227	229	233	236	240	243	245	246	247	249
R341	197	199	201	204	206	207	208	209	210	211	212	214	215	216	217	218	220	221	223	227	230	231	233	234
R342	215	219	220	221	222	223	224	226	227	229	234	235	237	238	242	245	249	253	254	256	257	258	259	260
R343	214	215	216	217	219	220	223	225	227	229	230	232	234	235	236	238	240	241	247	249	252	255	256	258
R344	271	273	275	277	280	281	285	286	287	290	297	299	303	305	308	311	314	319	322					
R345	199	203	214	215	216	217	221	223	229	232	233	234	235	237	238	240	241	242	243	246	247	249	251	252
R346	230	231	233	235	238	239	240	243	245	248	249	261	264	271	272	274	275	276	277	278	279	283	284	287
R347	209	210	211	212	213	214	217	219	220	222	226	227	229	235	239	240	243	249	251	252	254	257	258	259
R348	224	229	233	238	240	243	248	254	255	261	264	265	266	267	272	274	275	276	277	278	279	287	288	290
R349	203	204	206	207	208	210	211	212	215	217	219	220	221	222	223	225	226	227	229	231	234	235	236	243
R350	202	203	204	205	206	207	209	211	213	214	217	218	219	221	223	224	225	226	228	231	232	233	238	239
R351	239	240	242	244	245	250	251	254	259	261	265	266	271	272	274	276	277	278	279	281	282	283	285	290
R352	220	221	222	223	229	231	233	236	237	238	239	240	242	243	247	252	254	256	257	258	260	263	265	270
R353	253	255	257	259	260	261	262	263	264	266	270	272	274	275	276	278	279	280	281	282	283	284	285	290
R354	222	224	225	226	227	228	229	231	233	236	237	241	242	244	245	249	253	254	256	258	259	260	265	266
R355	223	225	226	228	234	235	239	240	243	244	245	247	250	251	252	254	257	258	260	263	265	266	268	269
R356	225	226	228	231	236	238	239	243	245	253	255	257	262	263	265	266	267	269	271	272	274	276	277	278
R357	204	206	207	208	209	210	211	212	219	220	221	225	226	227	229	230	231	232	233	234	236	237	240	241
R358	205	206	207	209	210	211	212	213	214	216	219	220	222	224	225	226	227	229	231	233	234	235	240	243
R359	234	239	240	241	243	244	245	247	248	250	251	259	260	261	263	266	271	273	281	282	284	289	290	291
R360	246	247	248	249	251	252	254	255	256	258	259	265	266	267	270	272	273	274	276	278	279	282	286	288

Copyright © 2005 IEEE. All rights reserved.
This is an unapproved draft, subject to change

Table 55A–2—P matrix: location 25 to 48

	C25	C26	C27	C28	C29	C30	C31	C32	C33	C34	C35	C36	C37	C38	C39	C40	C41	C42	C43	C44	C45	C46	C47	C48
R361	279	282	283	284	286	292	294	296	297	298	299	302	303	304	305	306	310	311	314	316	317	319	322	323
R362	308	310	313	315	317	318	319	321	322	324	325													
R363	223	224	225	226	227	230	234	235	236	238	245	247	248	249	250	256	258	260	261	264	267	268	270	271
R364	211	212	213	214	216	219	220	221	224	225	226	227	229	230	231	233	234	236	238	243	247	251	252	260
R365	249	251	252	253	255	256	257	258	259	262	267	268	269	270	271	273	279	282	285	286	287	291	292	293
R366	264	265	267	268	269	270	276	279	286	289	291	293	294	295	296	298	299	300	302	303	304	306	307	308
R367	235	236	238	241	242	244	247	250	251	253	257	261	262	265	266	268	269	272	273	274	275	276	278	279
R368	201	202	204	206	207	210	211	212	213	217	219	220	221	222	224	225	227	229	230	235	236	238	242	243
R369	212	213	214	216	219	220	224	225	227	229	232	233	234	236	237	241	242	243	244	249	250	251	253	254
R370	208	209	210	211	212	213	214	215	219	220	221	223	224	225	226	227	228	230	236	237	239	240	242	243
R371	209	210	211	212	213	214	215	216	217	220	221	222	223	225	227	228	232	233	235	241	243	244	248	250
R372	208	209	210	211	212	214	217	219	220	221	222	223	225	226	227	229	235	236	239	242	243	246	247	248
R373	245	246	247	251	252	253	254	257	260	261	262	268	269	270	273	275	277	279	280	281	282	285	286	288
R374	198	199	200	201	202	204	206	207	210	211	212	213	214	217	220	221	222	227	230	233	234	235	238	246
R375	248	249	250	253	254	261	264	265	266	271	279	280	281	284	287	290	291	293	294	296	297	299	301	302
R376	224	225	226	230	232	239	240	241	242	243	244	245	246	247	249	250	251	252	253	254	256	257	258	259
R377	216	218	223	224	225	226	232	238	239	241	243	244	245	246	250	253	254	255	256	258	260	265	267	268
R378	224	225	229	230	234	243	244	245	246	247	248	249	250	251	252	254	256	258	259	260	261	263	265	266
R379	233	236	239	240	243	249	250	251	252	254	257	262	266	267	273	279	280	286	290	292	293	294	295	298
R380	235	236	238	239	240	241	242	243	245	249	251	252	253	254	257	261	262	263	267	269	270	273	277	279
R381	207	209	210	211	212	213	214	215	217	220	222	223	224	225	230	231	232	233	239	240	241	243	244	245
R382	236	238	240	241	243	245	247	248	251	252	253	254	255	261	263	264	265	266	270	271	273	279	284	285
R383	230	232	235	240	241	243	246	249	250	252	254	255	257	262	263	265	267	268	269	275	279	280	282	284
R384	212	213	214	217	219	220	222	224	225	226	227	228	230	232	236	242	246	248	249	256	258	260	263	265
R385	265	266	267	268	269	270	272	274	275	276	278	280	288	290	291	292	293	295	298	301	302	303	304	307
R386	204	206	207	209	210	211	212	213	214	216	217	219	221	222	224	225	227	228	229	231	233	236	239	240
R387	237	239	240	242	243	248	250	251	252	253	256	257	259	260	261	262	268	269	270	271	272	273	274	276
R388	201	202	203	205	206	207	210	211	212	213	216	219	220	222	223	224	225	227	229	230	231	232	233	235
R389	232	235	241	242	243	244	246	247	248	249	250	251	254	256	257	258	259	261	262	263	265	266	267	270
R390	211	212	213	214	217	220	221	223	226	227	229	230	233	234	235	237	242	245	246	247	252	254	260	265
R391	247	249	250	254	255	256	258	259	260	263	264	268	269	270	271	272	274	276	278	282	283	284	285	286
R392	234	238	241	243	244	246	247	248	250	251	252	253	254	256	257	258	261	262	265	266	268	269	270	275
R393	220	221	223	224	225	228	229	230	231	233	235	237	238	240	243	245	250	251	252	255	257	259	260	262
R394	207	209	210	211	212	215	216	217	219	220	221	222	223	226	227	230	232	234	236	239	241	244	250	252
R395	215	222	224	225	226	229	235	236	240	243	244	245	247	248	251	253	255	257	259	261	267	270	272	273
R396	193	194	195	199	202	203	213	216	218	223	225	226	229	232	233	236	238	240	241	242	243	246	248	249
R397	209	210	211	212	213	214	216	217	219	220	221	222	225	227	228	229	232	233	235	236	237	239	241	242
R398	228	236	237	238	239	240	242	243	244	247	249	250	251	254	256	258	259	260	262	264	267	270	279	283
R399	251	252	253	254	255	257	259	260	262	263	264	265	266	267	268	269	270	272	273	274	275	276	277	278
R400	224	226	227	229	230	231	232	233	238	239	241	244	245	246	248	249	250	252	253	255	256	257	259	262
R401	234	236	238	241	243	244	247	250	251	252	258	260	265	266	268	269	272	274	276	277	278	279	281	283
R402	209	210	211	212	213	217	219	220	222	224	225	227	230	232	234	235	236	238	241	242	243	245	246	247
R403	205	206	207	210	211	212	215	219	222	224	226	227	228	230	231	232	233	235	236	238	239	241	242	245
R404	206	207	209	210	211	212	213	214	216	217	219	221	224	227	229	237	239	240	242	243	249	253	256	258
R405	196	197	198	199	200	201	202	203	204	205	206	209	210	211	212	215	219	220	222	223	227	229	230	231
R406	245	248	252	253	254	259	260	261	263	265	266	267	268	269	270	272	273	274	276	277	278	279	280	283
R407	232	233	235	236	240	241	245	247	251	255	257	267	268	269	270	271	277	279	282	286	289	291	292	296
R408	211	212	213	214	217	220	222	223	227	230	232	233	235	238	239	240	241	245	247	248	249	256	257	258
R409	242	243	245	255	256	258	261	265	266	271	272	276	279	280	281	283	285	286	287	291	292	293	294	295
R410	224	225	226	227	229	230	232	233	234	239	241	242	244	246	250	251	254	255	257	259	262	264	267	268
R411	205	206	207	208	209	211	213	215	218	219	221	225	227	229	230	231	234	238	239	243	245	246	249	251
R412	250	252	253	255	259	260	261	268	269	271	275	277	280	281	282	285	286	289	291	292	294	295	298	299
R413	207	208	209	211	213	214	215	217	221	223	225	229	231	232	234	235	236	239	244	247	249	251	255	257
R414	217	218	222	226	227	229	236	238	239	246	251	254	256	258	259	260	261	263	265	267	268	272	273	274
R415	242	246	248	252	253	256	257	258	261	262	263	264	272	274	275	276	277	278	280	282	284	286	288	289
R416	229	230	233	235	236	239	241	243	245	246	251	252	256	258	259	263	264	268	270	271	272	274	276	278
R417	242	243	244	250	251	252	254	256	258	259	265	267	268	269	272	274	275	276	278	281	286	288	291	293
R418	208	209	210	211	212	213	216	219	220	221	223	224	225	227	230	232	235	237	241	242	243	244	245	246
R419	225	226	228	231	232	234	235	238	240	241	243	244	245	247	249	250	251	254	259	261	263	264	266	271
R420	236	238	239	240	243	244	245	246	247	248	252	260	264	265	266	272	274	275	276	277	278	279	283	284

Copyright © 2005 IEEE. All rights reserved.
This is an unapproved draft, subject to change

Table 55A–2—P matrix: location 25 to 48

	C25	C26	C27	C28	C29	C30	C31	C32	C33	C34	C35	C36	C37	C38	C39	C40	C41	C42	C43	C44	C45	C46	C47	C48
R421	226	227	230	233	235	239	244	245	246	247	250	251	253	257	260	261	262	263	266	268	270	272	273	274
R422	240	243	245	246	248	249	250	252	256	258	259	261	263	268	269	271	272	274	276	277	278	282	285	286
R423	216	221	222	224	225	230	232	233	235	236	237	238	239	241	242	244	247	248	249	252	253	254	255	256
R424	258	259	260	263	264	265	266	267	271	272	273	274	276	277	278	279	282	283	284	285	286	287	289	290
R425	208	209	210	211	212	213	214	217	219	220	222	223	225	227	234	235	236	244	246	247	248	250	251	253
R426	233	234	235	236	239	243	247	252	254	255	256	258	259	261	263	264	265	266	268	269	271	272	273	274
R427	229	230	234	237	239	241	243	244	245	249	250	252	254	255	256	258	259	261	266	268	269	273	275	277
R428	214	217	219	220	222	223	224	225	227	238	239	240	243	244	248	249	250	252	253	254	256	258	259	261
R429	221	223	225	229	231	234	237	239	240	242	248	254	257	259	262	266	267	268	269	270	271	275	277	278
R430	207	209	210	211	212	213	214	216	219	220	221	222	225	227	234	235	239	240	243	244	245	246	248	249
R431																								
R432	215	216	217	219	220	222	224	226	227	228	229	232	233	238	240	241	242	244	247	248	249	250	254	255
R433	217	223	225	226	229	230	238	245	248	249	250	251	252	253	256	257	258	259	260	261	265	267	268	269
R434	198	199	200	201	202	203	205	206	207	210	211	212	213	214	216	219	220	221	222	223	224	227	228	230
R435	309	312	318	320	321	322	325																	
R436	215	220	221	226	228	229	230	231	232	233	235	237	238	239	240	241	243	244	245	248	249	250	252	256
R437	247	248	251	261	268	269	270	271	273	277	281	285	286	288	289	292	294	295	299	300	302	303	304	306
R438	206	208	210	211	212	215	219	220	222	226	227	231	232	234	236	237	240	241	242	243	245	247	249	250
R439	253	254	257	262	263	264	266	270	281	285	287	290	293	295	298	301	305	307	308	309	311	312	314	315
R440	190	191	192	193	195	199	208	213	215	216	221	225	229	230	236	238	241	243	246	247	249	250	252	254
R441	219	220	221	224	225	226	231	232	233	235	237	238	241	242	244	245	246	251	252	253	254	257	260	263
R442	226	227	230	231	233	234	235	236	240	244	245	247	250	251	253	255	259	261	262	263	264	265	266	268
R443	208	210	211	212	213	216	219	222	224	225	227	231	233	235	236	240	242	244	245	248	250	252	254	255
R444	225	226	229	230	232	233	235	237	239	240	244	245	247	248	249	250	251	252	253	254	256	258	259	261
R445	206	207	208	209	210	211	212	213	215	216	217	219	220	221	222	223	224	226	227	230	232	233	240	241
R446	203	205	214	215	217	221	224	225	226	234	237	240	242	249	253	254	255	256	258	260	261	265	266	267
R447	197	198	199	201	202	204	205	206	209	210	211	212	213	214	216	219	220	221	222	223	226	227	231	234
R448	217	221	225	231	232	234	235	238	240	241	243	244	246	247	250	252	254	255	259	261	263	264	265	267
R449	254	257	259	261	262	263	265	266	268	269	271	279	281	285	286	287	291	293	295	299	300	301	303	304
R450	202	203	204	206	207	208	210	211	212	213	216	217	219	220	224	227	229	233	235	237	240	241	243	244
R451	247	248	249	251	253	254	255	256	258	259	265	266	273	279	282	283	287	288	292	293	294	295	298	301
R452	233	238	239	241	243	246	247	249	250	251	252	253	255	256	258	261	263	265	266	267	268	271	272	274
R453	271	272	274	275	276	278	281	282	283	284	285	286	287	289	293	295	297	301	302	303	304	305	308	309
R454	241	242	246	252	253	254	256	257	258	259	262	263	264	265	267	268	271	272	274	275	276	277	278	280
R455	202	203	204	205	206	207	209	210	211	212	213	217	219	220	221	222	224	225	226	227	229	230	231	235
R456	219	221	222	223	225	227	228	229	235	238	239	240	243	244	247	249	250	251	253	254	256	258	260	263
R457	214	216	217	219	222	223	224	226	227	229	230	231	234	240	245	246	249	251	254	255	256	258	259	260
R458	241	243	245	246	247	249	252	253	255	256	258	259	261	264	265	266	270	271	275	279	280	282	284	286
R459	221	222	223	225	226	227	228	229	231	234	237	239	240	242	244	245	246	248	249	250	251	252	253	254
R460	240	242	243	244	246	247	249	250	251	253	254	257	259	260	261	262	263	264	266	268	269	271	272	274
R461	252	253	254	260	268	269	271	272	274	276	278	279	281	282	283	284	285	286	289	290	291	293	294	295
R462	210	211	212	214	215	217	219	220	222	223	225	227	229	234	235	239	240	244	245	247	248	249	250	254
R463	204	206	207	209	210	211	212	213	214	219	220	222	225	227	229	230	231	232	233	235	236	237	239	241
R464	198	200	201	202	203	204	205	206	207	208	209	210	211	212	213	214	215	220	221	223	226	227	228	229
R465	205	214	215	221	224	226	229	231	232	233	236	239	240	241	242	245	246	248	249	251	252	253	254	256
R466	230	231	233	234	236	240	242	243	244	245	247	248	249	250	251	254	255	256	257	258	259	260	261	262
R467	229	232	233	234	235	236	237	241	242	243	245	246	247	248	249	251	254	256	257	258	261	262	264	265
R468	210	211	212	214	215	216	217	218	219	221	222	225	229	230	231	233	235	236	239	242	243	244	247	248
R469	205	206	207	209	210	211	212	213	214	216	219	220	221	222	223	224	227	230	231	233	236	240	243	245
R470	216	219	220	221	222	224	225	226	227	229	231	232	233	234	238	239	240	243	246	252	253	256	257	258
R471	224	225	226	227	229	232	233	236	237	241	242	243	246	248	249	252	256	258	264	265	268	270	271	272
R472	205	207	208	213	217	218	219	220	221	223	225	228	229	231	232	233	234	239	240	241	243	247	250	251
R473	235	236	241	249	251	254	256	258	259	260	264	265	266	267	268	271	273	277	281	282	284	285	287	290
R474	216	219	220	222	223	224	226	227	228	230	231	234	236	240	242	244	246	248	249	250	251	252	254	255
R475	210	211	212	213	216	219	222	227	231	233	238	240	244	248	251	253	255	264	267	268	272	273	274	276
R476	213	214	215	217	219	220	222	223	225	226	231	232	233	234	235	236	238	239	241	243	244	246	247	248
R477	201	203	204	206	207	208	209	210	211	212	214	220	222	223	224	233	234	239	246	247	249	250	251	256
R478	230	234	236	242	243	245	246	247	251	252	253	257	260	261	262	273	275	279	280	286	288	293	294	295
R479	254	258	263	267	271	273	275	277	280	282	285	287	289	290	293	294	296	297	301	302	303	304	305	306
R480	242	243	245	247	248	249	251	252	253	255	256	258	261	262	265	266	268	269	270	272	274	276	277	278

Copyright © 2005 IEEE. All rights reserved.
This is an unapproved draft, subject to change

Table 55A–2—P matrix: location 25 to 48

	C25	C26	C27	C28	C29	C30	C31	C32	C33	C34	C35	C36	C37	C38	C39	C40	C41	C42	C43	C44	C45	C46	C47	C48
R481	247	248	250	252	254	259	260	261	263	265	266	268	269	272	274	275	276	277	278	279	280	283	284	286
R482	204	205	206	207	208	210	211	212	214	216	219	220	224	225	227	231	237	239	240	242	245	246	247	251
R483	221	222	223	226	227	230	232	233	234	235	238	239	240	241	244	245	246	248	249	250	253	254	255	256
R484	238	241	243	247	248	249	250	252	253	254	256	258	259	261	262	263	264	266	267	271	273	275	280	283
R485	197	200	201	202	203	204	206	207	209	210	211	212	213	214	215	216	217	219	220	221	222	223	224	225
R486	240	243	245	246	247	248	249	252	253	254	255	256	257	258	263	264	265	266	268	269	271	273	275	280
R487	206	207	208	209	210	211	212	215	216	217	219	222	223	224	226	227	229	230	231	234	235	236	238	239
R488	231	233	234	235	236	238	239	244	247	248	250	251	253	254	255	257	259	267	272	274	276	277	282	283
R489	190	195	196	203	216	220	221	225	228	229	230	232	236	237	238	239	240	241	242	246	248	249	251	252
R490	210	211	212	213	214	216	217	219	220	221	222	223	227	232	233	235	239	241	243	244	246	248	252	255
R491	244	246	247	249	250	251	252	255	256	261	263	265	266	267	270	279	282	284	285	288	290	294	301	302
R492	299	301	302	304	305	308	310	311	313	314	315	316	317	318	319	322	323							
R493	219	220	224	229	230	234	235	236	239	240	243	244	247	252	260	261	264	267	270	272	273	274	275	276
R494	277	280	286	288	291	292	293	294	295	297	298	299	301	302	304	306	310	311	313	314	315	318	319	321
R495	202	203	204	205	206	207	209	210	211	212	213	214	215	217	218	219	222	224	225	226	227	229	230	233
R496	218	219	220	222	223	227	228	230	231	234	240	242	244	245	246	248	251	252	253	255	257	260	261	264
R497	204	206	207	209	210	211	212	214	217	219	223	224	227	237	238	242	243	245	247	248	249	253	254	259
R498	229	230	231	232	233	237	240	241	242	243	245	246	247	249	251	253	254	255	256	258	265	266	270	272
R499	207	208	210	211	212	213	215	216	217	219	220	221	224	225	226	227	232	234	235	236	237	238	240	241
R500	193	195	196	197	200	201	203	204	206	207	209	210	211	212	213	214	215	216	217	219	220	221	224	226
R501	249	251	254	268	269	270	271	272	273	274	275	276	277	278	280	281	282	283	284	285	286	289	295	299
R502	215	220	222	224	226	228	231	232	236	237	240	241	242	244	245	246	247	248	250	254	255	257	259	260
R503	235	239	243	244	246	250	251	252	255	256	257	260	262	263	265	266	268	269	270	271	272	274	275	276
R504	201	206	207	208	210	211	212	213	214	215	217	219	220	221	222	223	225	227	233	234	235	236	240	243
R505	229	230	231	233	234	235	236	237	242	246	247	248	249	251	253	254	262	263	264	265	273	277	279	280
R506	212	213	214	219	220	221	222	223	225	226	227	231	232	233	234	235	236	238	239	240	241	247	248	251
R507	229	232	236	239	240	241	242	244	245	246	247	250	259	263	264	265	266	267	268	269	270	272	274	275
R508	208	209	211	213	217	218	219	221	225	228	229	230	231	236	238	240	242	244	246	247	249	250	251	254
R509	233	236	238	240	243	244	245	246	247	248	250	252	254	256	257	258	259	260	261	263	265	272	274	275
R510	200	201	202	203	204	206	207	210	211	212	216	217	219	220	221	222	223	226	229	230	231	232	233	234
R511	214	215	217	218	219	223	225	226	227	229	233	235	236	237	242	245	246	265	266	268	270	272	273	274
R512	213	214	217	219	220	222	224	225	227	229	233	238	239	240	243	249	253	254	256	257	258	259	261	262
R513	194	195	197	199	214	216	217	220	221	224	226	228	230	231	232	234	235	238	242	243	245	250	253	254
R514	202	203	205	208	214	215	216	221	222	225	229	230	232	233	234	235	237	241	242	243	244	246	248	249
R515	207	208	210	212	215	216	217	221	222	224	226	227	229	231	233	235	240	243	245	246	248	253	255	257
R516	255	259	260	264	267	268	272	275	276	282	285	286	288	289	290	292	293	294	295	297	298	299	300	301
R517	210	211	212	213	214	217	219	220	222	225	227	229	232	234	236	241	243	246	249	250	251	252	254	256
R518	233	235	238	239	240	244	246	251	253	257	259	262	265	266	270	273	275	277	279	284	286	287	288	289
R519	204	205	206	209	210	211	212	214	217	219	220	222	225	227	231	232	233	234	235	238	239	240	241	243
R520	212	213	214	215	216	219	220	222	223	226	227	229	230	231	232	235	236	238	241	245	247	249	251	254
R521	203	205	213	215	219	222	223	224	227	228	229	230	231	232	233	235	236	237	238	241	243	244	249	250
R522	277	278	280	281	284	286	287	288	289	290	292	293	294	298	301	302	303	304	306	308	310	311	312	314
R523	210	211	212	213	217	219	220	222	223	224	225	226	231	232	234	235	236	240	241	243	244	245	246	247
R524	206	207	209	210	211	212	217	220	222	224	225	227	230	232	234	235	236	238	240	243	244	245	249	253
R525	220	221	222	225	226	227	231	233	235	240	244	245	247	249	250	251	252	255	256	258	259	263	264	270
R526	201	202	203	204	205	206	207	208	209	210	211	212	216	219	220	222	227	228	229	231	236	239	240	244
R527	203	204	206	207	208	209	210	211	212	213	215	217	219	220	221	222	224	226	227	229	230	232	233	234
R528	210	211	212	213	214	216	217	219	220	221	222	224	225	226	230	231	236	239	240	243	244	246	248	250
R529	242	243	245	246	248	249	250	251	253	256	258	259	260	261	263	265	266	267	273	281	283	284	285	287
R530	248	251	255	263	264	271	273	285	287	293	294	295	296	297	299	300	302	303	304	307	308	309	310	313
R531	208	209	210	211	212	213	214	215	216	217	219	222	223	224	225	227	230	233	234	236	240	242	248	252
R532	285	286	288	289	292	293	295	296	297	298	299	300	304	306	309	310	316	321	322	323	324			
R533	242	243	244	246	247	248	249	250	251	252	253	254	255	256	258	259	262	264	273	275	282	283	284	288
R534	220	222	223	224	225	226	231	235	237	239	240	242	243	245	246	248	249	252	256	258	259	260	263	265
R535	202	203	204	205	206	207	209	210	211	212	213	214	215	217	219	220	222	223	224	225	227	231	234	238
R536	209	210	211	212	213	216	219	220	222	224	225	227	228	229	231	233	234	235	237	238	239	240	245	246
R537	204	206	207	208	209	210	211	212	213	214	216	217	220	222	224	226	227	230	232	233	238	239	241	247
R538	190	193	196	203	204	209	213	216	217	219	221	224	226	230	233	235	237	238	239	240	242	244	245	246
R539																								
R540	213	214	216	217	219	220	222	223	224	225	227	229	230	232	233	234	239	241	242	244	246	247	250	254

Copyright © 2005 IEEE. All rights reserved.
This is an unapproved draft, subject to change

Table 55A–2—P matrix: location 25 to 48

	C25	C26	C27	C28	C29	C30	C31	C32	C33	C34	C35	C36	C37	C38	C39	C40	C41	C42	C43	C44	C45	C46	C47	C48
R541	220	223	224	229	231	236	238	240	242	243	244	245	246	247	249	250	251	255	256	257	258	259	260	261
R542	201	202	203	204	205	206	207	209	210	211	212	213	214	217	219	221	222	227	228	229	230	231	232	235
R543	220	222	224	225	227	229	231	233	235	238	239	244	245	246	250	251	253	255	257	261	262	268	270	279
R544	214	216	217	220	223	231	232	234	235	236	237	238	239	240	242	244	245	247	250	252	253	254	256	258
R545	215	216	221	225	226	229	230	232	233	238	241	247	248	254	256	257	259	260	262	267	270	271	273	275
R546	213	214	216	217	218	222	224	226	227	229	232	234	238	241	244	245	250	251	254	255	256	258	261	264
R547	202	203	204	206	207	209	210	211	212	213	214	216	219	221	222	223	224	226	227	230	231	232	233	234
R548	201	202	204	206	207	209	210	211	212	215	216	217	219	220	221	222	224	226	227	229	235	238	239	240
R549	219	221	225	226	228	229	230	238	239	240	242	243	244	245	247	248	249	250	251	256	258	259	260	261
R550	252	260	264	270	271	272	274	275	276	278	280	281	283	285	287	289	292	293	294	296	298	300	301	303
R551	192	193	197	198	200	201	202	204	206	207	210	211	212	213	217	219	220	223	224	227	229	232	234	235
R552	309	315	318	320	321	322	325																	
R553	210	211	212	213	216	217	219	220	222	223	225	226	227	229	230	235	236	242	243	245	253	256	257	258
R554	207	209	210	211	212	214	216	219	222	223	227	229	230	231	235	238	240	243	245	247	249	251	252	253
R555	210	211	213	216	217	219	220	221	224	225	228	231	232	233	235	236	237	238	241	242	245	246	247	248
R556	229	232	234	241	243	245	246	247	248	249	252	254	257	262	264	265	266	267	268	269	273	277	281	282
R557	217	219	220	221	224	226	228	230	231	232	233	234	237	239	240	241	242	243	244	245	246	249	250	252
R558	202	203	204	205	206	207	209	210	211	212	213	214	215	216	217	219	220	223	226	227	230	232	234	235
R559	219	220	221	222	223	225	226	227	228	229	230	231	233	234	236	237	240	242	243	247	249	253	255	256
R560	212	213	219	220	221	222	224	225	226	227	230	231	232	235	238	240	241	243	245	247	248	249	251	252
R561	304	305	308	309	310	311	312	314	317	319	322	323	325											
R562	229	232	233	234	235	236	239	240	241	245	247	253	254	263	266	267	268	269	275	277	279	280	282	286
R563	231	232	233	234	235	236	240	241	242	244	248	249	250	251	252	253	255	259	260	263	264	266	268	269
R564	250	251	254	257	259	260	262	265	266	270	271	272	274	276	277	278	279	281	283	284	285	287	289	290
R565	206	207	208	210	211	212	213	216	219	220	221	222	223	224	227	230	233	235	238	239	242	243	245	248
R566	217	218	221	223	224	226	227	228	238	240	242	243	248	253	259	261	266	272	274	276	278	281	282	283
R567	238	239	240	241	242	244	247	249	250	256	257	258	262	263	271	272	274	276	278	282	284	287	288	292
R568	205	208	213	215	223	230	233	236	238	239	240	244	245	248	249	250	251	253	254	256	258	259	263	265
R569	223	226	229	232	235	236	238	239	240	241	243	244	245	247	248	250	252	253	254	257	260	261	262	264
R570	206	207	208	209	210	211	212	213	217	219	220	221	223	224	225	226	227	228	236	237	238	239	242	243
R571	253	254	258	259	260	264	265	266	275	278	280	286	293	294	295	299	300	301	305	307	310	311	314	315
R572	239	241	243	246	248	251	252	253	254	255	257	260	261	262	264	271	272	274	276	277	278	279	282	283
R573	191	193	195	197	200	201	202	205	206	207	208	210	211	212	213	217	221	222	224	225	226	227	234	235
R574	241	243	245	246	249	251	253	254	258	259	260	263	264	265	266	267	271	272	274	276	278	279	281	283
R575	218	219	221	223	225	227	230	232	233	234	236	237	238	239	241	242	244	245	246	247	248	249	250	251
R576	184	186	191	193	195	196	197	198	199	200	201	202	203	204	205	206	207	208	209	210	211	212	214	215
R577	233	234	235	237	238	241	242	243	244	246	247	249	250	251	253	256	258	259	260	261	263	264	267	268
R578	206	207	209	210	211	212	213	214	216	220	224	225	227	229	231	232	233	234	237	239	240	241	242	243
R579	193	194	195	202	203	209	216	217	220	225	226	230	233	234	236	237	240	243	246	247	251	254	255	259
R580	213	214	217	219	220	221	222	223	224	225	227	231	235	236	238	239	241	243	245	246	248	249	251	253
R581	223	225	226	227	232	233	235	236	239	241	243	244	246	249	250	251	252	255	256	258	259	261	264	266
R582	197	199	201	204	206	209	210	211	212	213	214	215	217	218	219	222	226	227	233	235	239	240	243	246
R583	210	211	212	213	214	217	219	220	222	224	225	227	229	230	232	233	236	239	241	242	244	246	247	250
R584	206	207	208	209	210	211	212	214	216	217	219	220	221	222	223	224	227	229	230	232	239	240	241	243
R585	240	241	243	249	251	252	254	255	256	257	258	261	262	263	266	270	271	272	273	274	276	278	279	280
R586	246	248	249	250	254	255	256	257	258	259	260	262	265	266	268	269	275	279	280	282	283	287	288	289
R587	220	221	222	224	225	227	229	230	231	232	233	235	236	237	239	241	247	252	253	255	257	259	260	261
R588	241	244	245	247	250	251	254	257	258	259	260	262	267	268	269	273	275	280	285	286	287	290	292	293
R589	214	215	216	217	219	220	221	225	226	227	229	232	233	234	236	237	239	241	242	243	248	249	251	252
R590	265	266	270	272	273	274	276	277	278	282	283	285	287	288	291	293	294	296	297	299	301	302	304	305
R591	199	200	201	203	204	206	207	209	210	211	212	213	214	216	219	222	223	224	227	229	230	231	232	237
R592	204	208	209	213	215	218	221	226	228	231	232	233	237	239	241	242	245	248	253	254	255	256	258	260
R593	200	201	202	203	204	205	206	207	208	209	210	211	212	213	214	216	219	220	221	222	224	226	227	231
R594	207	209	214	216	219	220	221	229	230	231	233	235	237	239	240	242	246	247	248	249	251	252	254	257
R595	223	225	227	228	229	235	237	238	240	242	243	247	249	251	252	253	255	256	257	258	259	262	263	268
R596	209	210	211	212	213	214	216	217	219	220	221	222	224	225	226	227	229	230	232	233	234	236	238	241
R597	225	227	228	229	233	236	241	242	245	247	249	252	253	254	256	258	259	260	264	265	266	267	269	273
R598	198	202	203	205	208	214	217	221	223	225	230	231	232	234	235	239	240	241	243	244	246	247	250	252
R599	240	241	242	244	246	248	249	250	251	252	253	254	255	257	259	260	262	265	267	271	272	274	275	276
R600	205	206	207	208	209	210	211	212	213	214	215	216	217	219	220	222	225	227	228	232	235	238	243	246

Copyright © 2005 IEEE. All rights reserved.
This is an unapproved draft, subject to change

Table 55A–2—P matrix: location 25 to 48

	C25	C26	C27	C28	C29	C30	C31	C32	C33	C34	C35	C36	C37	C38	C39	C40	C41	C42	C43	C44	C45	C46	C47	C48
R601	213	214	219	220	221	227	231	232	234	235	237	241	242	243	245	248	250	251	256	258	259	260	261	266
R602	240	243	244	246	248	250	251	252	253	257	260	261	262	263	264	265	266	267	275	277	279	280	284	286
R603	222	223	225	227	231	232	234	235	236	239	241	243	245	247	248	251	252	254	255	257	260	262	263	264
R604	203	204	206	207	209	210	211	212	216	219	220	221	223	225	227	230	231	236	239	240	244	245	249	250
R605	250	251	253	254	257	259	261	262	264	265	266	268	269	271	272	273	274	276	278	279	281	282	283	284
R606	210	211	212	213	215	216	217	219	220	221	224	225	226	227	229	232	233	234	235	236	237	239	241	243
R607	202	204	206	207	208	209	210	211	212	213	214	215	217	220	222	225	226	227	230	235	236	238	240	244
R608	212	213	216	217	219	220	221	222	223	224	226	227	229	230	231	234	235	236	239	240	245	246	247	248
R609	212	213	214	215	217	219	222	224	225	226	229	230	231	233	234	238	239	240	242	244	245	247	249	250
R610	247	248	250	253	254	257	259	262	265	266	268	269	271	272	274	275	276	277	278	280	281	282	283	284
R611	216	217	219	221	222	225	227	231	232	233	234	235	236	241	242	245	248	251	256	258	265	266	268	271
R612	208	209	210	211	212	214	215	216	217	219	220	221	222	225	227	229	234	235	236	238	239	241	247	248
R613	213	215	216	218	220	224	225	226	229	230	231	233	234	235	238	240	242	243	244	246	247	249	250	251
R614	210	211	212	213	216	219	220	221	222	224	225	227	231	233	234	235	236	242	247	248	249	254	256	257
R615	210	211	212	213	214	215	217	220	222	223	224	225	227	228	230	233	234	236	238	239	243	244	248	250
R616	212	213	214	216	217	219	220	222	223	224	225	226	227	229	230	231	232	233	236	238	239	241	243	244
R617	215	217	221	225	229	233	235	236	238	239	240	243	244	245	246	248	250	251	252	253	256	257	258	260
R618	221	225	229	230	232	238	241	244	245	246	248	249	250	253	254	260	261	263	264	265	267	268	269	270
R619	225	230	232	233	235	240	242	243	244	245	247	249	250	251	252	253	254	255	256	257	258	259	260	262
R620	208	209	213	214	216	221	224	226	229	230	232	233	235	241	242	243	246	247	249	250	256	258	261	263
R621	236	238	240	241	243	245	246	247	248	249	252	254	255	256	257	258	260	262	264	265	268	269	270	277
R622	202	204	205	206	208	209	210	211	212	213	214	215	216	217	220	222	223	224	225	226	231	234	238	240
R623	256	257	258	260	261	262	263	268	269	272	273	274	277	278	279	286	288	289	290	293	294	295	296	297
R624	249	250	251	255	256	257	258	260	262	263	265	266	268	269	275	280	281	286	289	290	291	292	294	295
R625	204	205	206	207	209	210	211	212	213	216	220	222	224	226	227	230	231	233	234	235	236	237	238	240
R626	232	234	236	238	239	240	241	242	244	247	251	252	254	258	262	263	268	270	271	280	281	285	286	287
R627	246	250	251	252	253	254	255	257	259	260	261	262	264	265	266	267	268	269	270	273	275	277	279	280
R628	196	208	209	210	212	213	214	215	216	218	220	222	223	225	226	227	228	229	231	232	235	236	237	239
R629	207	209	210	211	212	213	214	215	216	217	219	220	223	224	225	226	227	229	230	233	234	236	237	240
R630	224	225	226	232	235	236	239	240	241	243	244	245	246	247	249	250	252	253	256	258	259	260	261	264
R631	204	206	207	208	209	210	211	212	213	217	219	220	221	222	224	225	229	230	231	232	234	235	236	240
R632	242	249	255	256	257	258	260	261	262	264	266	267	268	269	272	273	274	276	277	278	280	281	282	285
R633	247	253	254	257	259	261	262	263	264	271	275	279	284	286	289	293	294	296	298	300	302	303	304	306
R634	205	206	207	208	209	210	211	212	214	217	219	220	222	223	224	225	227	229	232	233	238	240	241	243
R635	233	238	241	242	245	246	247	249	251	254	259	260	261	264	266	267	268	269	270	273	277	279	280	283
R636	205	209	213	214	215	216	218	224	225	226	228	229	230	232	234	238	240	241	243	244	245	246	249	252
R637	191	192	195	196	197	198	200	201	202	204	205	206	207	208	209	210	211	212	214	215	216	217	220	225
R638	271	273	277	279	280	281	286	287	293	297	300	307	308	322	324									
R639	205	206	207	208	209	210	211	212	213	215	216	219	220	221	223	225	227	228	230	231	233	234	238	240
R640	238	241	242	244	245	250	254	255	256	257	258	259	260	261	264	265	266	271	272	273	274	276	277	278
R641	191	192	193	194	195	196	197	198	200	201	202	203	204	205	206	207	209	210	211	212	213	214	215	216
R642	236	240	241	242	245	246	247	248	249	251	252	255	256	257	258	262	263	265	266	271	272	274	275	276
R643	217	222	226	228	229	230	231	233	235	239	242	244	245	246	248	249	252	253	254	255	256	257	258	259
R644	202	203	204	205	206	207	209	210	211	212	213	214	219	220	222	225	226	227	229	230	233	234	235	238
R645	204	206	207	210	211	212	213	214	219	220	221	222	223	225	226	227	229	231	235	236	238	239	242	245
R646	214	216	217	219	220	222	224	227	229	232	234	239	241	243	244	250	255	256	257	258	259	261	262	264
R647	209	210	212	214	215	217	219	220	222	224	225	226	227	229	231	232	233	238	239	241	243	245	246	248
R648	218	220	225	229	230	232	238	240	241	244	246	247	248	249	250	254	261	263	264	265	266	271	273	279
R649	197	199	200	201	204	206	209	210	211	212	214	215	216	217	219	220	223	224	226	227	232	234	237	238
R650	212	213	216	217	218	219	221	222	223	224	225	226	227	229	230	231	233	235	236	240	242	243	244	245
R651	247	249	251	253	254	256	258	260	263	265	266	267	268	269	270	271	272	273	274	275	276	277	278	279
R652	246	247	248	252	253	254	257	260	261	264	266	268	269	271	272	274	276	277	278	279	281	282	283	284
R653	202	203	204	205	206	207	209	210	212	215	217	220	221	223	224	226	227	233	235	236	237	238	239	240
R654	208	212	213	215	217	222	223	224	225	228	230	231	232	234	235	237	238	239	241	242	243	244	246	248
R655	206	207	210	211	212	213	215	216	217	219	220	221	222	223	225	229	230	231	234	238	239	240	242	244
R656	214	215	216	217	219	220	221	222	223	224	225	227	230	232	234	236	237	238	240	241	242	244	245	247
R657	299	301	305	309	320	321	322																	
R658	284	287	290	293	294	296	300	301	302	303	304	306	308	310	311	312	314	315	319	321	322	323	325	
R659	206	207	209	210	211	212	213	215	217	220	221	222	224	226	227	229	230	233	235	236	243	244	246	247
R660	200	201	202	204	206	207	210	211	212	215	216	217	219	220	222	223	226	227	229	230	232	233	234	238

Copyright © 2005 IEEE. All rights reserved.
This is an unapproved draft, subject to change

Table 55A–2—P matrix: location 25 to 48

	C25	C26	C27	C28	C29	C30	C31	C32	C33	C34	C35	C36	C37	C38	C39	C40	C41	C42	C43	C44	C45	C46	C47	C48
R661	197	198	200	201	202	204	205	206	207	208	209	210	211	212	213	214	215	216	217	219	220	224	225	226
R662	244	250	251	252	254	255	259	260	261	262	263	264	267	268	273	275	279	281	286	287	288	289	291	292
R663	212	213	214	215	216	217	219	220	222	223	225	226	227	229	233	234	235	236	238	243	248	250	251	252
R664	214	217	226	229	230	231	235	236	239	244	248	249	250	254	255	256	257	260	262	267	270	272	273	274
R665	241	242	243	248	249	252	256	257	258	259	260	262	263	265	266	271	272	274	275	276	278	280	282	284
R666	205	206	209	210	211	212	213	214	215	217	219	222	224	225	226	227	234	240	242	245	247	248	254	255
R667	228	229	232	234	235	236	238	243	244	247	248	249	251	254	259	260	261	265	270	273	275	277	279	280
R668	224	225	229	232	234	235	238	240	241	243	244	245	248	252	254	255	259	263	265	266	267	268	269	270
R669	259	261	264	265	266	267	268	269	275	280	281	285	286	291	293	294	299	301	302	307	308	309	312	313
R670	219	220	221	223	224	226	227	228	230	231	232	233	234	235	236	237	238	241	242	245	246	247	251	252
R671	255	257	260	262	265	270	271	272	274	276	278	281	283	284	285	287	292	293	294	295	296	297	298	299
R672	184	188	190	191	195	197	198	200	201	202	203	204	206	207	208	209	210	211	212	213	214	215	220	222
R673	206	207	209	210	211	213	214	215	216	217	219	221	224	226	229	231	233	236	237	238	242	244	245	246
R674	206	207	208	210	211	212	215	216	217	219	220	222	224	226	227	229	232	235	236	238	241	242	246	248
R675	205	215	216	223	224	225	226	229	231	235	243	244	245	248	249	250	252	253	254	256	257	258	261	262
R676	223	225	230	232	234	235	236	237	241	242	243	244	250	252	254	260	261	263	265	268	269	270	272	274
R677	206	207	208	209	210	211	212	213	216	217	219	220	221	222	223	225	227	229	230	232	234	235	239	241
R678	205	208	214	220	222	223	224	226	230	233	236	237	242	244	247	250	252	256	257	258	259	260	262	264
R679	199	202	205	208	216	221	225	226	228	230	232	233	239	246	247	251	254	255	260	261	263	265	266	267
R680	226	232	234	239	240	241	243	244	248	250	251	252	253	254	260	261	263	264	265	266	267	270	271	272
R681	201	204	206	207	208	209	210	211	212	213	214	217	219	220	221	222	223	229	232	234	235	239	245	246
R682	194	197	199	200	201	204	206	210	211	212	214	215	216	217	219	220	221	222	223	224	225	227	229	234
R683	246	248	249	251	256	258	259	260	261	265	273	277	279	281	286	287	290	291	292	294	296	298	301	302
R684	252	254	256	258	264	271	272	274	275	276	278	279	281	282	288	290	291	292	295	296	297	298	304	305
R685	230	233	235	236	238	239	240	242	243	244	245	247	250	251	254	257	259	260	264	265	267	270	277	281
R686	203	205	215	221	224	228	229	232	233	235	236	239	244	245	246	247	248	249	252	253	255	256	258	263
R687	211	212	214	215	216	217	220	222	223	224	225	227	228	229	232	233	238	239	241	243	244	248	250	251
R688	240	242	245	247	248	264	267	268	269	271	277	282	289	292	294	295	296	298	303	305	306	308	309	311
R689	223	224	227	229	233	238	239	243	244	245	246	249	250	254	255	256	257	258	259	260	262	263	264	267
R690	194	196	198	199	202	205	208	215	216	217	221	224	227	229	230	233	235	236	237	239	242	243	244	247
R691	209	210	211	212	213	214	215	217	219	220	222	224	225	226	227	230	235	236	243	244	247	248	249	250
R692	221	222	224	225	226	227	229	230	233	234	236	238	239	240	245	246	247	249	251	254	256	257	258	259
R693	206	207	209	210	211	212	213	214	215	217	219	221	222	223	224	227	228	232	239	240	243	245	247	248
R694	198	199	200	201	202	203	204	206	209	210	211	212	213	214	217	219	221	222	223	224	225	227	231	232
R695	233	235	236	238	239	240	241	244	245	247	248	250	251	252	254	257	259	260	261	262	264	265	266	271
R696	229	230	231	232	233	235	236	237	243	244	245	246	249	252	256	257	258	259	261	262	263	264	265	266
R697	223	225	226	229	230	232	234	235	245	248	254	255	256	257	258	259	260	261	263	268	269	270	271	272
R698	221	224	226	229	230	239	242	243	244	245	248	249	250	251	252	254	255	256	257	258	261	262	268	272
R699	227	229	230	231	232	234	235	239	240	241	243	244	247	248	250	251	252	254	255	256	257	258	261	262
R700	226	229	230	231	238	239	240	242	244	246	247	250	251	252	253	254	257	259	260	261	262	263	264	266
R701	222	223	225	226	229	232	234	236	237	238	239	240	241	245	246	247	248	250	251	252	254	259	260	261
R702	255	256	257	258	260	261	262	264	265	266	267	268	269	271	273	275	277	280	283	286	287	294	295	296
R703	214	215	217	219	220	221	222	224	226	227	233	234	245	248	250	253	258	259	261	268	271	273	282	283
R704	210	211	212	213	214	215	216	217	220	221	222	227	229	231	233	235	236	239	243	246	249	251	252	254
R705	211	212	213	214	215	216	217	219	220	222	223	224	227	229	230	232	234	238	240	241	243	250	252	253
R706	235	236	238	241	244	250	251	254	258	259	263	264	266	268	269	270	275	277	278	280	282	291	293	295
R707	246	249	250	254	255	256	258	259	260	264	265	266	268	269	270	272	273	274	276	277	278	281	285	287
R708	204	206	207	208	209	210	211	212	213	215	216	217	219	221	223	225	227	229	230	232	233	234	235	236
R709	266	268	269	271	272	273	274	276	277	278	281	285	286	287	288	290	291	292	295	296	297	298	301	302
R710	216	217	220	221	224	229	230	234	236	237	238	239	240	242	244	248	251	253	254	257	259	262	265	266
R711	214	217	221	229	233	235	237	239	245	247	248	249	254	255	261	262	263	264	270	272	274	275	276	277
R712	205	206	207	209	210	211	212	213	214	216	217	219	220	221	222	223	224	225	226	227	228	229	230	233
R713	227	231	233	235	238	247	249	251	252	254	256	257	258	259	260	263	264	265	266	269	271	272	273	274
R714	208	209	210	211	212	213	216	217	219	220	221	222	223	225	227	228	232	236	240	241	243	248	252	253
R715	212	213	214	216	217	219	221	222	224	225	226	227	228	229	231	232	233	239	240	241	245	246	249	253
R716	197	198	199	201	202	203	204	205	206	207	209	210	211	212	214	215	217	218	220	221	222	223	224	230
R717	247	249	252	253	256	258	259	261	267	268	269	270	272	273	274	275	276	277	278	288	290	291	292	296
R718	229	230	232	233	235	236	238	240	241	242	243	244	245	246	247	248	250	251	252	255	257	259	262	265
R719	216	222	229	230	233	235	237	241	242	244	245	251	252	253	257	262	263	271	273	275	281	284	286	287
R720	208	209	210	211	212	216	217	218	222	224	226	227	233	234	235	236	239	240	243	244	245	247	250	251

Copyright © 2005 IEEE. All rights reserved.
This is an unapproved draft, subject to change

Table 55A–2—P matrix: location 25 to 48

	C25	C26	C27	C28	C29	C30	C31	C32	C33	C34	C35	C36	C37	C38	C39	C40	C41	C42	C43	C44	C45	C46	C47	C48
R721	204	205	206	207	208	209	210	211	212	214	215	219	220	221	222	224	225	226	227	229	230	231	232	233
R722	233	234	235	237	238	240	241	242	243	244	245	246	247	249	250	251	252	254	255	256	258	261	263	265
R723	247	248	250	254	255	262	263	265	266	267	268	269	271	273	275	277	279	281	282	285	286	287	289	291
R724	263	265	266	267	272	274	276	278	280	281	282	283	284	286	288	290	291	292	293	294	297	298	302	303
R725	226	229	233	239	244	246	247	250	253	255	259	261	262	263	264	266	267	270	272	274	276	277	279	281
R726	219	220	222	223	224	226	227	229	232	234	238	239	241	244	246	247	249	250	251	254	255	256	257	258
R727	199	203	215	223	224	227	229	230	231	232	233	234	235	239	241	242	243	244	246	247	248	252	253	254
R728	233	234	236	239	243	244	245	247	248	250	251	254	255	257	259	261	262	263	267	268	269	270	271	272
R729	252	259	264	265	266	267	270	271	279	282	284	285	286	287	289	291	293	294	296	299	304	306	308	309
R730	217	219	221	222	224	226	227	229	230	233	236	237	239	242	243	244	248	249	250	251	252	254	256	258
R731	259	262	263	265	266	267	275	279	280	281	284	285	286	287	289	291	292	294	295	296	297	298	300	301
R732	201	202	203	204	206	207	209	210	211	212	213	214	219	220	222	225	226	227	228	230	233	234	235	236
R733	216	219	223	228	229	230	233	235	236	238	240	241	243	248	249	253	255	256	258	260	261	262	264	268
R734	255	256	258	259	260	261	264	265	266	268	269	273	277	279	280	281	283	285	286	287	288	290	293	295
R735	252	258	259	260	263	264	267	270	271	273	275	277	280	284	286	287	290	291	295	298	299	303	305	310
R736	229	230	231	234	235	236	237	239	242	244	246	247	248	249	250	251	253	254	255	256	258	259	260	263
R737	207	209	210	211	212	213	214	215	219	220	221	222	223	225	226	227	231	233	235	236	237	241	242	247
R738	206	207	208	209	210	211	212	213	214	216	217	220	221	222	223	224	226	227	229	230	231	232	235	236
R739	224	225	227	229	231	232	233	234	236	237	241	242	244	247	248	250	252	256	258	259	261	265	269	279
R740	189	190	191	192	195	197	199	200	201	202	204	206	208	210	211	212	213	215	216	217	219	220	222	227
R741	230	232	233	235	236	238	240	241	243	245	246	247	248	251	253	255	257	261	262	264	267	268	269	272
R742	207	208	209	210	211	212	213	219	220	222	224	225	227	229	230	231	232	233	234	238	240	241	243	244
R743	215	216	221	222	223	225	226	227	231	237	238	239	242	244	247	249	250	252	255	263	267	268	269	271
R744	238	239	240	241	246	251	253	254	257	260	262	263	268	269	270	273	275	277	280	282	285	287	289	291
R745	228	229	230	232	233	234	236	238	241	243	244	245	246	247	248	250	251	253	257	259	262	265	266	267
R746	216	221	226	229	230	233	234	236	238	239	241	243	244	248	251	253	255	258	263	264	267	268	269	272
R747	208	209	210	211	212	214	215	219	220	221	222	225	226	227	230	233	234	235	238	243	247	251	252	256
R748	207	210	211	212	216	217	219	221	222	223	225	227	228	229	230	232	236	237	239	241	242	244	247	248
R749	198	202	205	208	213	217	219	223	225	230	231	232	234	235	240	241	242	244	245	246	247	248	249	250
R750	209	210	211	212	213	214	217	219	222	223	224	225	227	232	234	238	240	241	244	248	254	255	263	267
R751	197	198	199	200	201	202	203	204	206	208	209	210	211	212	214	215	216	218	220	222	227	229	231	232
R752	233	235	236	239	241	243	244	246	248	249	254	255	256	257	258	259	260	261	262	267	270	271	272	274
R753	287	290	292	297	298	301	303	306	313	316	320	321	324											
R754	221	224	225	226	234	235	240	242	243	244	247	248	252	253	254	255	257	259	261	262	265	266	268	277
R755	195	197	200	201	204	205	206	207	209	210	211	212	213	214	217	219	220	221	223	224	225	227	229	232
R756	222	225	229	232	237	240	241	242	248	254	255	257	262	264	265	267	269	270	271	272	273	274	275	276
R757	249	250	251	253	254	256	257	258	259	260	261	262	264	268	269	271	277	281	282	283	285	286	287	288
R758	206	209	210	211	212	215	217	219	220	221	222	223	226	227	229	230	231	232	234	236	239	240	241	243
R759	206	207	209	210	211	212	213	216	217	219	222	225	226	227	228	238	241	243	244	248	249	250	253	257
R760	221	222	225	227	229	232	233	235	241	245	246	253	254	263	265	266	267	269	270	272	274	275	276	278
R761	234	235	238	243	248	252	254	257	262	263	264	265	266	270	272	274	275	276	278	281	282	283	284	285
R762	221	223	224	225	229	230	231	232	235	236	241	242	243	247	250	251	253	254	257	259	260	262	264	265
R763	210	211	212	214	215	216	220	222	223	225	226	227	232	233	234	235	239	240	241	245	246	253	254	257
R764	239	240	241	242	243	245	246	247	248	249	251	253	254	257	259	262	265	266	267	270	271	272	274	275
R765	243	245	247	250	252	253	254	255	257	261	265	266	269	271	272	273	274	276	277	278	280	281	285	286
R766	225	229	230	231	232	238	240	241	242	243	244	245	247	248	249	251	252	253	259	260	263	266	268	269
R767	229	230	232	233	234	238	241	242	243	244	245	247	248	250	251	252	253	257	259	260	261	262	265	266
R768	196	197	199	200	201	204	206	209	210	211	212	213	214	216	217	219	220	221	223	227	229	234	235	238
R769	245	247	248	249	250	251	254	255	256	258	259	260	265	266	267	269	273	275	279	283	284	285	287	288
R770	205	206	207	208	209	210	211	212	213	217	219	220	221	222	223	224	225	227	228	229	235	238	243	245
R771	226	229	232	235	236	239	240	241	243	244	245	247	248	250	252	253	254	257	260	261	262	264	271	273
R772	202	203	205	206	207	210	211	212	213	216	219	220	221	226	227	231	236	237	239	240	242	243	248	250
R773	206	207	209	210	211	212	213	214	219	221	222	225	227	229	230	231	234	235	238	243	245	247	248	251
R774	212	213	214	215	217	219	220	222	223	226	227	229	232	235	236	239	240	241	246	253	260	263	265	266
R775	231	232	233	234	236	240	241	244	250	251	253	254	255	257	261	263	267	271	275	276	279	282	285	286
R776	247	250	257	258	259	262	264	265	267	268	269	272	274	276	277	278	281	283	284	285	289	290	291	293
R777	212	214	219	220	221	222	223	224	225	226	227	231	232	234	236	240	241	245	246	254	255	257	262	263
R778	221	229	232	233	234	236	239	240	241	248	250	251	257	260	262	263	264	266	267	268	269	275	277	279
R779	211	212	214	219	220	222	223	224	225	227	229	231	232	235	236	238	239	240	241	243	244	246	248	249
R780	194	195	196	197	199	200	201	204	206	207	208	209	210	211	212	214	215	217	219	220	221	222	223	224

Copyright © 2005 IEEE. All rights reserved.
This is an unapproved draft, subject to change

Table 55A–2—P matrix: location 25 to 48

	C25	C26	C27	C28	C29	C30	C31	C32	C33	C34	C35	C36	C37	C38	C39	C40	C41	C42	C43	C44	C45	C46	C47	C48
R781	216	217	219	220	224	225	226	228	229	231	234	237	238	239	240	242	243	247	251	252	253	256	258	260
R782	216	221	223	225	226	229	232	233	235	238	239	240	241	243	244	247	250	251	252	257	262	266	268	269
R783	201	202	203	204	205	206	207	208	209	210	211	212	213	215	219	220	221	222	224	227	230	231	234	236
R784	221	223	230	233	238	240	244	245	251	254	255	259	263	264	275	277	279	280	284	285	292	294	297	298
R785	200	201	203	204	206	207	208	209	210	211	212	213	214	216	217	219	220	222	223	225	227	230	231	233
R786	240	243	245	248	249	252	253	256	257	258	260	262	264	265	266	267	272	273	274	276	277	278	281	282
R787	232	233	234	235	238	240	241	242	243	244	245	246	248	249	251	252	255	256	258	260	261	263	264	265
R788	222	224	226	228	229	230	231	232	234	235	237	238	240	241	242	243	245	246	248	249	251	254	255	256
R789	236	237	238	240	242	244	245	250	251	253	254	255	257	262	263	265	266	271	272	274	276	278	281	283
R790	203	205	206	208	210	212	215	216	219	220	221	222	223	225	226	227	229	231	232	234	239	244	246	248
R791	211	212	213	214	215	216	218	222	224	227	229	230	231	233	237	240	242	244	246	250	251	253	256	258
R792	205	206	207	208	209	210	211	212	213	214	217	223	224	225	227	234	237	239	244	246	248	249	250	251
R793	217	219	220	221	224	225	226	227	232	234	236	237	239	241	242	243	247	248	249	251	252	253	255	256
R794	202	205	207	213	215	216	217	218	220	223	224	225	226	229	230	231	234	235	239	242	243	245	246	247
R795	215	216	217	219	220	221	222	223	224	225	226	227	228	230	231	232	243	244	245	246	248	249	250	253
R796	213	214	215	216	217	220	221	222	223	225	230	232	233	234	235	238	240	241	245	246	248	251	253	254
R797	203	205	208	215	216	220	221	223	225	232	234	240	241	243	244	246	249	251	254	255	258	259	261	263
R798	222	223	224	225	226	227	228	230	231	233	234	235	239	240	245	246	249	253	256	258	260	261	263	265
R799	221	222	225	227	233	234	236	237	239	242	243	255	259	260	264	267	269	271	273	275	277	278	282	283
R800	230	232	233	235	236	237	238	239	241	242	244	246	247	251	252	253	254	255	257	260	261	263	264	266
R801	228	229	230	232	236	238	239	240	241	242	243	245	246	247	248	249	250	251	254	256	258	259	260	266
R802	204	206	209	210	211	212	213	217	219	220	221	223	225	226	227	230	232	233	236	237	238	240	241	242
R803	237	240	242	244	248	249	250	251	252	254	255	256	257	258	259	262	263	265	266	268	269	271	275	280
R804	234	235	236	238	239	244	245	252	253	257	260	261	262	264	265	266	267	272	273	274	276	277	278	279
R805	219	220	221	222	226	227	231	232	234	236	238	241	243	245	246	247	249	252	253	256	259	261	265	267
R806	209	215	221	226	231	232	233	238	240	241	242	249	251	252	253	255	256	257	258	260	261	262	265	266
R807	203	207	215	223	224	225	229	231	232	235	236	239	240	241	244	245	250	251	253	256	260	265	266	267
R808	201	202	204	205	206	208	209	210	211	212	213	214	215	217	219	220	221	222	225	226	227	231	232	235
R809	213	214	216	217	219	221	222	223	224	227	228	230	232	233	236	238	239	241	246	247	248	251	255	259
R810	208	209	210	211	212	213	214	215	217	219	220	221	224	225	227	229	230	233	234	236	237	238	239	242
R811	208	210	211	212	215	217	219	220	222	223	225	226	229	231	232	234	235	236	238	241	242	243	244	245
R812	221	224	225	231	232	233	235	236	239	241	243	246	247	248	249	250	255	256	258	262	264	271	273	275
R813	246	248	249	250	252	254	257	259	260	261	262	265	266	268	269	270	272	273	274	275	276	278	279	281
R814	220	221	222	231	232	233	237	240	241	244	247	249	250	251	253	254	255	259	260	263	264	266	267	271
R815	198	200	201	202	203	204	205	206	207	208	209	210	211	212	213	214	216	217	219	222	223	225	226	227
R816	221	226	230	232	233	234	235	236	237	238	241	244	249	250	251	253	254	260	263	265	266	267	269	275
R817	199	200	201	202	203	204	205	206	207	209	210	211	212	213	214	219	220	222	224	227	230	231	233	236
R818	214	216	217	219	220	221	222	225	227	231	233	234	235	237	239	240	242	243	245	246	247	249	252	254
R819	200	201	202	203	204	206	207	209	211	213	214	215	217	218	219	223	224	225	228	231	232	233	235	236
R820	237	238	242	244	247	248	250	251	252	253	254	257	259	261	262	263	265	272	273	274	276	277	278	280
R821	235	238	239	240	243	246	247	248	252	254	260	261	268	269	270	271	272	274	276	278	280	281	282	283
R822	214	215	217	219	222	223	227	230	234	235	236	245	246	248	249	256	257	260	262	264	265	267	269	271
R823	247	249	250	251	253	254	255	256	257	258	259	261	262	263	266	267	268	269	270	272	273	274	276	277
R824	213	214	216	217	220	222	224	226	227	232	233	234	238	240	241	242	243	244	248	249	252	254	255	256
R825	213	214	216	219	220	221	222	224	225	226	227	229	231	232	233	234	236	237	238	239	241	243	246	249
R826	265	267	268	281	282	285	286	287	288	290	291	292	294	296	298	301	302	304	305	307	308	309	310	311
R827	285	286	287	290	292	293	297	299	312	313	318	320	323	324	325									
R828	247	248	249	250	251	253	254	259	261	263	267	280	281	286	289	290	291	292	293	298	300	302	305	306
R829	242	245	246	247	250	251	254	262	266	268	269	271	277	279	282	285	286	287	292	295	296	298	299	301
R830	223	226	233	238	242	243	244	247	249	250	251	254	256	257	258	260	262	265	266	269	271	273	275	277
R831	230	233	234	235	238	239	241	243	247	250	253	255	260	261	263	265	266	267	268	269	271	272	273	274
R832	225	229	230	231	233	236	238	239	243	244	247	253	257	260	261	262	263	266	270	277	279	281	288	290
R833	193	194	195	196	199	209	213	215	224	225	226	229	236	239	240	244	247	249	251	253	254	256	257	258
R834	238	239	240	241	243	244	246	248	250	252	261	263	264	268	269	270	273	275	279	282	284	287	289	291
R835	223	224	226	233	235	238	242	243	247	248	250	251	252	254	260	261	266	267	268	269	270	271	275	277
R836	187	188	193	196	197	200	201	203	204	206	207	208	210	211	213	220	221	224	225	226	228	229	234	236
R837	206	209	210	211	212	213	214	216	217	220	221	222	224	227	229	230	236	237	239	242	244	247	249	252
R838	209	210	211	212	213	214	215	219	220	222	224	227	230	231	232	233	234	239	240	241	243	248	249	251
R839	217	219	220	223	224	225	227	234	236	239	240	246	247	248	254	257	261	262	263	264	267	269	271	277
R840	262	263	264	265	267	273	275	277	280	281	290	291	292	293	297	298	303	304	305	309	310	311	312	315

Copyright © 2005 IEEE. All rights reserved.
This is an unapproved draft, subject to change

Table 55A–2—P matrix: location 25 to 48

	C25	C26	C27	C28	C29	C30	C31	C32	C33	C34	C35	C36	C37	C38	C39	C40	C41	C42	C43	C44	C45	C46	C47	C48
R841	213	214	216	217	219	220	222	224	225	226	227	238	239	244	245	246	248	250	251	252	253	255	259	260
R842	226	230	231	232	239	240	241	243	244	246	250	252	253	254	256	257	258	259	260	261	262	263	264	268
R843	222	223	225	226	227	231	232	233	234	236	237	238	239	241	242	243	244	245	246	247	249	250	251	252
R844	212	213	217	219	220	221	222	224	225	226	227	229	230	235	236	238	240	245	246	252	255	257	260	262
R845	264	273	277	280	281	282	285	286	287	289	290	291	293	295	299	301	305	311	314	315	316	317	318	319
R846	219	220	221	222	224	225	226	227	231	232	233	234	235	239	240	241	243	245	246	247	248	251	252	254
R847	194	197	198	200	201	202	203	204	205	206	207	208	209	210	211	212	213	214	215	219	220	221	222	223
R848	196	198	202	203	205	207	211	213	215	216	217	226	227	232	233	234	236	237	239	241	242	243	247	248
R849	225	232	233	234	235	237	241	242	243	244	245	249	250	251	252	255	260	263	267	268	269	280	281	282
R850	246	248	249	251	252	253	255	256	257	258	260	262	264	273	275	279	280	282	283	284	288	291	292	294
R851	211	212	213	215	216	217	219	221	222	223	224	225	227	228	229	230	233	234	235	238	239	240	241	242
R852	236	239	240	241	243	244	249	251	252	253	254	256	258	259	260	261	263	264	267	268	269	270	272	274
R853	228	229	230	231	233	234	236	237	238	242	243	244	245	247	248	249	250	252	253	254	256	257	258	259
R854	239	242	244	248	249	250	251	253	255	256	257	258	259	260	262	263	265	268	269	271	272	273	274	275
R855	212	214	215	216	220	221	222	224	225	227	231	233	234	236	239	240	243	244	245	246	247	254	259	261
R856	210	211	212	213	216	217	219	222	223	224	225	226	227	232	233	235	236	238	241	243	244	246	247	248
R857	235	238	240	244	245	246	248	249	250	251	252	253	254	255	256	257	258	259	261	262	263	264	266	268
R858	232	239	240	241	243	244	247	248	250	251	252	254	259	260	263	270	271	272	274	275	276	277	278	280
R859	194	195	197	198	199	200	201	202	204	205	206	208	209	210	211	212	213	214	216	217	219	220	222	227
R860	208	209	210	211	212	217	220	226	227	229	230	232	234	236	237	238	239	240	242	243	246	247	248	249
R861	222	223	224	227	230	235	244	250	252	254	255	260	261	265	266	268	280	289	291	292	294	295	296	297
R862	212	216	217	219	220	221	222	224	225	227	232	234	235	241	243	244	246	248	249	250	252	254	256	257
R863	254	255	256	258	261	262	264	265	267	268	269	270	271	272	273	274	276	277	278	285	286	287	289	290
R864	208	214	215	217	219	220	223	224	227	230	233	234	235	236	237	238	240	245	246	248	249	251	254	257
R865	220	222	223	224	226	227	229	230	231	232	234	239	240	245	252	253	260	262	263	265	266	267	268	272
R866	226	230	232	235	241	243	245	246	247	248	249	250	252	253	254	256	257	258	262	264	265	266	268	269
R867	233	234	235	236	240	241	248	252	255	260	262	264	265	266	271	273	277	281	286	290	291	293	296	299
R868	197	200	201	203	204	205	206	207	209	210	211	212	214	215	216	217	219	220	222	224	227	229	232	233
R869	208	209	210	211	212	213	216	217	219	220	221	222	226	227	228	232	236	238	239	241	243	244	248	250
R870	212	213	216	217	219	221	222	225	226	227	229	231	233	236	240	242	247	248	251	253	254	255	257	260
R871	249	250	251	252	254	255	256	257	258	262	264	271	272	273	274	276	277	278	279	284	286	287	288	293
R872	197	198	200	201	202	204	206	209	210	211	212	213	214	216	217	219	220	221	222	225	226	227	230	231
R873	232	233	235	236	238	239	240	241	242	243	244	245	246	247	248	250	251	256	257	258	259	260	262	263
R874	237	238	240	242	244	245	247	249	250	251	252	253	255	257	259	260	261	262	263	264	265	267	270	277
R875	226	230	231	235	239	246	247	248	249	251	254	255	256	257	258	261	262	264	265	266	267	270	272	274
R876	219	223	224	226	227	228	229	232	234	237	242	244	246	251	252	253	257	259	260	261	264	265	266	269
R877	213	214	216	219	220	222	223	224	225	226	227	228	230	231	233	234	236	239	240	244	246	247	248	249
R878	217	219	221	222	225	227	228	231	233	235	236	238	245	248	249	251	254	256	258	264	267	268	272	274
R879	232	235	236	238	241	244	245	246	247	248	251	253	254	259	260	263	265	266	267	268	269	272	274	275
R880	254	256	257	258	259	261	262	263	267	270	272	274	275	276	278	280	281	284	285	286	287	288	289	290
R881	267	275	277	280	281	282	286	289	291	292	293	295	298	299	302	306	315	316	317	319	321	323	325	
R882	250	251	252	254	256	258	259	261	264	268	269	271	272	274	275	276	277	278	280	282	286	288	290	293
R883	208	209	210	211	212	213	214	215	217	219	220	221	223	224	225	227	229	230	231	233	234	237	238	239
R884	321	322	324																					
R885	225	226	229	230	232	233	238	239	242	244	248	249	250	251	252	254	255	256	258	261	263	265	268	269
R886	236	238	241	245	247	249	251	252	253	254	256	257	258	264	265	268	271	272	274	276	278	280	281	282
R887	204	206	207	210	211	212	213	216	217	219	220	221	224	226	227	229	232	233	235	237	239	241	244	245
R888	220	223	224	225	230	231	237	243	247	249	250	251	252	256	257	258	259	260	262	263	265	266	268	269
R889	241	242	243	244	246	251	252	257	260	262	264	267	268	269	275	277	279	280	281	282	286	289	290	291
R890	236	238	239	243	246	249	251	253	255	256	257	258	260	262	270	273	275	277	279	281	283	284	285	286
R891	208	209	210	211	212	213	214	215	216	217	220	221	222	223	227	231	232	233	235	238	240	241	248	249
R892	219	220	222	224	225	227	228	229	230	240	249	252	255	261	265	266	269	271	273	277	280	283	289	290
R893	231	233	234	235	236	237	238	242	243	247	251	252	253	269	270	271	273	275	277	279	283	285	287	288
R894	233	240	243	244	245	247	248	249	250	252	259	265	267	270	272	273	274	276	278	281	283	285	287	290
R895	217	219	220	221	222	225	227	230	233	234	235	239	243	245	249	250	252	253	255	257	262	265	266	267
R896	207	209	210	211	212	213	214	216	217	219	220	221	224	225	226	227	228	229	236	237	240	241	242	251
R897	206	207	210	211	212	213	215	216	217	219	220	224	227	229	230	232	235	237	238	239	241	243	244	245
R898	199	203	208	216	220	223	224	225	228	229	231	234	235	236	238	240	244	245	246	248	252	253	255	259
R899	201	204	206	207	208	209	210	211	212	213	214	216	219	220	221	224	225	226	227	229	230	232	236	237
R900	235	237	238	241	249	251	252	254	256	257	258	261	262	263	265	266	268	269	272	273	274	275	276	277

Copyright © 2005 IEEE. All rights reserved.
This is an unapproved draft, subject to change

Table 55A–2—P matrix: location 25 to 48

	C25	C26	C27	C28	C29	C30	C31	C32	C33	C34	C35	C36	C37	C38	C39	C40	C41	C42	C43	C44	C45	C46	C47	C48
R901	207	209	211	213	214	217	218	219	223	225	228	229	234	235	236	245	247	252	253	257	261	262	263	265
R902	211	212	213	214	216	219	220	224	225	226	227	231	233	237	242	244	247	248	249	250	256	257	258	259
R903	193	194	195	197	198	200	201	202	203	204	205	206	209	210	211	212	213	215	216	217	219	220	221	222
R904	223	224	229	230	235	236	243	245	247	248	249	254	256	257	258	262	269	271	272	274	276	278	282	287
R905	212	213	214	217	220	221	222	223	224	226	227	228	232	233	236	238	239	241	243	246	247	248	249	253
R906	223	225	227	232	233	235	239	240	241	243	244	245	246	248	250	251	253	255	259	260	263	266	267	269
R907	202	204	206	207	208	210	211	212	213	215	217	219	220	223	225	227	232	236	237	238	239	243	245	248
R908	249	251	252	253	258	261	263	267	271	272	274	275	276	278	282	283	284	294	295	296	299	302	305	309
R909	209	210	211	212	213	214	215	219	220	221	222	223	226	227	231	232	236	237	239	241	242	245	247	248
R910	203	204	206	207	208	209	210	211	212	214	215	216	219	220	221	222	223	225	226	227	229	230	231	233
R911	207	209	210	211	214	217	219	220	228	230	231	232	233	235	236	237	239	240	241	242	244	246	250	251
R912	241	243	245	246	248	251	252	253	257	259	260	262	263	266	267	268	269	275	279	282	284	287	289	292
R913	195	196	199	203	205	208	209	213	214	216	229	230	232	233	236	238	239	241	242	249	250	251	254	255
R914	199	202	203	205	215	217	219	220	231	232	233	234	236	238	240	241	243	244	246	248	250	251	253	255
R915	220	222	223	225	226	227	233	234	235	237	239	240	242	244	245	249	250	256	257	258	259	260	262	264
R916	246	250	252	254	255	259	260	261	264	265	266	275	279	282	283	284	285	286	287	288	294	296	303	304
R917	245	250	251	252	253	254	255	256	257	258	262	263	265	266	275	281	282	283	286	287	291	296	298	299
R918	211	212	213	214	217	219	220	222	224	225	226	227	229	230	232	233	239	240	243	245	246	251	252	253
R919	216	217	218	221	223	224	226	229	230	231	232	234	235	238	241	245	246	249	251	253	256	258	259	260
R920	207	209	210	211	212	214	215	216	217	218	222	225	226	227	229	233	234	235	239	243	246	248	251	253
R921	216	223	225	226	229	231	233	234	238	239	240	243	245	247	248	251	253	257	262	264	268	269	271	277
R922	229	235	236	239	240	243	248	249	251	253	256	257	259	260	261	262	264	266	267	268	269	270	271	272
R923	213	216	220	221	223	224	227	229	230	231	234	235	237	239	242	244	245	247	250	251	253	254	255	257
R924	234	236	237	239	240	241	242	246	247	249	254	256	257	258	259	262	263	264	266	268	269	283	286	287
R925	197	198	199	200	202	203	220	221	223	224	228	230	232	235	238	242	243	244	247	250	251	263	265	267
R926	216	218	219	220	223	224	226	228	232	233	235	240	241	242	243	244	245	246	247	251	253	255	261	264
R927	297	298	301	302	304	308	309	310	312	313	321	322	324											
R928	214	215	219	220	221	222	223	224	226	229	234	236	238	243	245	246	251	252	253	254	257	260	262	265
R929	269	271	273	275	277	280	286	288	289	290	292	294	295	296	300	301	302	304	305	306	309	310	312	313
R930	216	217	219	220	222	226	227	230	234	235	237	240	242	243	244	246	248	250	251	252	255	257	258	260
R931	236	239	243	244	245	246	247	249	250	251	254	255	256	257	258	259	260	263	264	267	268	269	270	271
R932	223	229	231	232	233	234	235	237	241	242	246	247	248	250	252	253	256	257	258	259	260	266	270	271
R933	239	240	243	244	249	250	253	254	256	257	258	259	260	262	263	265	266	267	280	282	283	284	286	287
R934	214	215	219	220	222	224	225	226	227	229	231	232	233	234	236	237	239	241	242	243	244	246	247	249
R935	251	253	254	259	261	263	265	268	269	270	273	277	281	282	285	286	292	298	299	301	303	306	308	310
R936	311	312	314	316	319	321	322	323	325															
R937	247	248	249	250	251	252	253	254	257	258	260	261	262	263	264	270	272	274	275	276	277	278	282	283
R938	221	222	223	226	229	230	233	234	238	239	240	241	248	249	256	258	260	261	262	263	265	266	272	274
R939	235	236	239	240	241	244	246	249	251	252	253	255	256	258	261	262	265	266	268	269	270	272	274	275
R940	194	196	199	203	214	216	221	223	226	229	235	240	241	244	245	248	251	253	254	255	256	260	261	264
R941	182	187	190	194	195	199	208	213	215	216	223	225	229	231	236	240	242	244	246	249	251	253	254	255
R942	202	203	204	205	206	210	211	212	215	216	217	219	220	221	222	227	229	230	232	236	239	241	245	247
R943	273	275	277	280	281	285	289	292	293	294	296	298	299	303	305	306	307	308	315	317	318	321	322	
R944	212	213	219	220	221	222	223	225	226	227	229	231	232	234	240	241	253	255	257	258	262	266	268	270
R945	223	224	226	230	234	236	239	244	246	249	250	252	254	255	256	257	258	259	261	263	264	267	270	273
R946	227	228	229	230	232	233	236	238	239	240	241	243	249	252	256	257	258	262	265	266	268	271	272	273
R947	247	248	249	251	253	255	256	257	258	260	261	262	263	264	266	267	268	269	275	279	280	281	283	284
R948	209	210	211	212	213	214	215	216	217	220	221	222	223	226	231	232	234	235	236	238	241	243	245	246
R949	212	213	216	217	220	222	224	225	227	229	230	232	233	234	235	238	239	240	241	242	243	245	247	249
R950	203	204	205	206	207	209	210	211	212	214	217	219	225	227	229	230	235	237	238	246	247	249	256	257
R951	200	201	202	203	204	205	206	207	208	209	210	211	212	213	216	217	219	220	221	223	224	226	227	230
R952	205	206	209	210	211	212	213	216	217	219	221	222	224	226	227	229	230	236	238	239	244	245	250	251
R953	226	227	230	233	234	235	236	240	242	244	245	246	248	250	251	253	254	255	259	261	264	265	267	269
R954	248	249	252	254	255	256	257	258	262	264	275	277	281	283	284	286	291	293	297	299	302	308	309	310
R955	223	225	227	231	232	233	234	236	241	245	246	247	249	251	252	253	254	256	257	258	260	261	262	263
R956	210	211	212	213	214	216	219	220	222	225	227	231	235	240	242	243	244	245	247	248	250	252	253	254
R957	251	252	256	258	261	262	264	268	269	275	282	283	285	286	287	288	292	293	294	295	298	301	304	308
R958	233	235	236	239	240	241	242	245	246	248	249	250	253	259	260	261	263	270	272	274	275	276	277	278
R959	203	204	205	206	207	209	211	214	215	217	218	220	221	223	225	226	229	234	235	238	239	240	248	250
R960	200	201	202	204	206	207	209	210	211	212	213	214	216	217	219	220	221	223	226	227	235	237	239	240

Copyright © 2005 IEEE. All rights reserved.
This is an unapproved draft, subject to change

Table 55A–2—P matrix: location 25 to 48

	C25	C26	C27	C28	C29	C30	C31	C32	C33	C34	C35	C36	C37	C38	C39	C40	C41	C42	C43	C44	C45	C46	C47	C48
R961	235	237	238	239	240	245	247	252	253	254	257	259	260	261	262	263	264	265	267	268	269	271	272	273
R962	200	201	202	203	204	205	206	207	210	211	212	217	219	221	222	224	227	229	230	232	233	235	236	238
R963	253	254	257	258	260	262	263	264	268	270	272	274	276	277	278	281	283	285	286	288	289	290	291	293
R964	206	207	208	209	210	211	212	213	214	216	217	219	220	222	224	227	233	234	236	240	241	243	244	245
R965	204	205	206	207	208	209	210	211	212	213	215	216	220	221	222	223	224	226	227	230	231	233	235	236
R966	206	207	208	209	210	211	212	216	217	221	222	224	226	227	229	233	235	236	240	241	244	245	247	250
R967	238	240	242	244	245	246	247	248	249	250	251	252	253	255	256	258	261	263	264	268	270	273	276	280
R968	219	220	224	225	226	229	230	232	234	235	236	238	240	241	242	243	244	245	247	249	250	251	253	254
R969	220	222	223	224	225	226	229	232	233	235	237	238	240	241	243	250	251	253	254	255	257	261	262	264
R970	243	246	247	252	257	260	261	262	265	266	268	269	270	271	275	280	281	284	285	286	293	294	296	297
R971	203	204	205	206	207	208	209	210	211	212	215	217	219	221	222	223	227	233	234	236	238	239	245	246
R972	210	211	213	214	215	217	219	220	221	223	225	226	228	231	232	233	234	235	237	238	239	240	241	245
R973	211	212	213	219	222	223	224	225	226	227	231	233	234	236	238	246	248	249	253	254	256	257	258	261
R974	206	207	209	210	211	212	213	214	215	216	217	219	220	221	222	223	224	225	227	229	230	231	236	240
R975	237	238	240	242	246	251	252	253	254	255	259	260	263	264	266	272	273	274	276	277	278	280	281	282
R976	224	231	234	235	236	244	245	246	247	250	256	257	259	260	261	262	264	267	270	272	274	276	278	280
R977	205	206	207	208	209	210	211	212	213	215	216	219	220	221	223	224	225	227	229	230	231	233	235	238
R978	196	197	200	201	202	204	205	206	207	209	210	211	212	213	214	215	219	220	222	223	224	225	226	227
R979	247	248	250	252	253	259	260	270	272	274	275	276	277	278	280	281	283	284	285	289	290	294	295	296
R980	211	212	215	216	219	220	222	227	231	234	239	243	246	249	250	251	254	255	256	258	259	264	265	266
R981	191	195	196	214	216	229	230	232	233	234	235	237	240	241	242	245	247	248	249	250	251	255	256	258
R982	208	209	210	211	212	213	214	216	217	219	220	222	225	227	229	231	235	236	239	240	244	249	250	251
R983	253	254	256	260	261	263	264	265	266	267	271	275	279	280	281	283	284	285	287	288	290	291	292	297
R984	206	207	209	210	211	212	213	216	217	219	220	221	222	223	224	225	226	227	230	232	233	234	235	238
R985	207	209	210	211	212	213	214	217	220	221	223	224	225	227	229	233	234	237	240	242	243	244	245	247
R986	206	209	210	211	212	213	214	216	217	219	220	221	222	223	224	225	226	227	233	234	236	238	239	241
R987	227	228	229	230	231	233	234	236	241	243	244	245	247	248	249	250	251	252	253	254	261	263	264	265
R988	230	232	233	235	236	240	241	243	244	248	249	250	251	252	253	254	255	256	257	262	263	264	265	267
R989	204	206	207	209	210	211	212	213	214	215	219	221	222	223	224	225	227	231	232	236	239	240	241	245
R990	248	250	253	257	262	264	267	268	269	271	272	273	274	275	276	278	280	281	283	284	286	289	290	291
R991	219	220	222	225	226	227	230	231	232	233	234	235	238	239	240	241	243	246	247	248	251	252	260	263
R992	234	235	236	239	240	241	244	246	250	254	257	259	260	262	264	266	267	268	269	273	275	280	282	288
R993	223	224	225	230	231	233	236	237	242	243	244	245	246	250	254	257	258	262	263	265	266	272	273	274
R994	230	234	235	236	247	249	250	251	254	256	257	258	261	265	266	267	277	279	282	283	288	289	290	292
R995	210	211	212	213	214	215	219	221	222	224	225	227	230	231	232	234	236	239	240	241	244	245	246	247
R996	263	265	266	270	272	274	275	276	278	281	282	283	284	285	286	289	291	293	294	296	300	302	303	304
R997	241	242	244	245	247	250	251	253	254	255	257	259	262	264	265	266	268	269	272	273	274	275	276	278
R998	209	213	214	216	219	224	225	226	229	230	232	233	235	238	240	241	242	244	245	246	247	250	251	252
R999	211	212	216	217	219	220	221	224	225	227	232	234	235	236	237	238	240	241	242	243	244	247	248	250
R1000	204	206	207	209	210	211	212	213	220	221	223	224	225	226	227	229	230	231	233	234	235	236	240	241
R1001	227	228	229	230	231	243	244	245	247	249	250	253	254	256	257	258	259	260	261	262	264	265	266	267
R1002	206	207	209	210	211	212	213	214	215	216	219	222	224	225	227	232	238	241	242	243	244	245	247	248
R1003	199	202	205	208	214	215	216	217	222	224	225	230	232	233	237	238	239	241	242	245	247	252	253	255
R1004	249	251	252	253	256	257	258	261	262	263	264	267	268	269	273	275	277	279	281	283	284	288	289	290
R1005	216	223	224	225	229	232	234	238	241	243	245	246	248	252	254	259	260	263	266	267	268	269	270	273
R1006	207	209	210	211	212	213	214	219	220	222	223	224	227	231	232	233	234	235	236	237	238	239	240	241
R1007	235	237	242	245	246	247	248	251	252	260	264	265	267	268	270	272	274	275	276	278	279	283	285	286
R1008	211	212	213	214	217	219	220	222	224	225	227	230	233	238	239	242	245	247	248	250	251	253	254	255
R1009	243	246	247	248	251	252	253	254	259	260	262	265	267	273	275	280	282	284	285	286	288	289	292	297
R1010	211	212	217	219	221	222	223	225	226	227	232	233	234	237	239	240	241	242	248	252	253	254	256	258
R1011	204	205	206	207	209	210	211	212	213	215	219	221	222	223	225	227	228	231	234	239	240	243	245	249
R1012	243	244	246	247	248	249	250	251	252	253	254	260	261	263	264	265	266	267	268	269	275	277	279	280
R1013	205	207	208	211	214	215	224	225	226	227	229	230	231	232	234	238	241	243	244	247	248	249	252	253
R1014	204	206	207	208	209	210	211	212	213	214	215	217	218	221	222	224	225	227	229	230	231	232	236	239
R1015	252	254	255	256	258	259	261	264	265	267	270	271	282	283	284	286	288	290	291	293	296	297	299	301
R1016	207	208	209	210	211	212	213	214	216	217	219	220	222	223	224	225	227	229	230	231	232	239	241	242
R1017	204	206	207	209	211	213	216	218	221	223	225	226	228	229	236	237	239	242	243	244	247	250	251	252
R1018	210	211	212	213	214	217	219	220	223	224	227	236	237	238	240	242	243	244	248	249	250	253	255	256
R1019	239	242	243	245	246	247	248	249	250	251	252	253	254	255	257	259	260	262	263	264	266	273	275	277
R1020	217	219	221	222	223	224	226	227	228	229	230	232	234	238	239	240	241	242	245	246	249	251	256	261

Copyright © 2005 IEEE. All rights reserved.
This is an unapproved draft, subject to change

Table 55A–2—P matrix: location 25 to 48

	C25	C26	C27	C28	C29	C30	C31	C32	C33	C34	C35	C36	C37	C38	C39	C40	C41	C42	C43	C44	C45	C46	C47	C48
R1021	212	214	217	219	221	222	225	228	230	231	233	234	235	236	238	241	244	245	247	249	250	251	253	254
R1022	255	256	258	260	261	263	264	265	266	268	269	271	272	274	277	279	281	286	288	289	290	291	292	293
R1023	212	214	216	217	219	220	222	223	227	228	229	230	233	234	235	238	240	241	246	247	248	249	253	254
R1024	235	240	241	242	243	249	253	255	256	257	258	260	263	266	268	269	270	272	273	275	276	280	281	283
R1025	228	229	233	235	236	238	240	243	244	249	250	252	253	255	256	257	258	259	261	262	263	264	266	273
R1026	218	222	227	229	230	232	233	234	235	240	241	245	246	247	254	255	267	269	270	272	274	276	277	278
R1027	226	229	230	231	232	233	234	235	236	240	241	242	247	249	250	251	252	254	255	256	257	258	264	265
R1028	227	233	237	242	246	248	249	252	253	256	257	258	260	262	263	264	267	269	270	271	275	277	281	284
R1029	199	202	207	208	216	221	222	223	224	225	230	231	235	236	237	242	243	247	249	256	257	258	259	260
R1030	236	239	240	244	245	250	251	254	256	261	263	265	267	268	269	270	271	272	274	276	277	278	283	284
R1031	232	236	241	243	244	246	247	249	251	252	253	257	260	262	263	264	265	267	268	269	270	273	277	282
R1032	230	231	232	233	235	238	246	248	250	253	254	257	262	263	264	267	271	272	274	276	277	278	279	280
R1033	206	207	209	210	211	212	217	219	220	221	223	224	226	227	233	234	235	237	240	242	244	246	247	250
R1034	236	238	239	241	243	244	249	252	255	256	258	259	260	261	263	264	271	272	274	276	278	282	283	284
R1035	214	215	216	217	221	225	230	231	233	235	236	242	243	245	249	252	253	256	258	261	263	273	275	279
R1036	216	217	221	223	225	226	231	233	236	238	240	242	243	245	246	250	253	254	255	257	260	273	275	280
R1037	230	231	232	233	236	237	241	242	243	244	245	247	248	250	252	259	260	261	263	267	269	270	272	274
R1038	214	216	217	219	220	222	225	226	227	228	231	235	236	238	239	240	245	247	249	251	253	254	256	258
R1039	230	232	233	234	235	236	238	241	243	244	247	248	250	252	257	260	262	263	264	265	266	271	277	279
R1040	234	236	239	240	241	244	245	247	251	253	254	257	261	262	263	265	266	267	268	269	270	271	279	280
R1041	250	251	253	257	262	263	264	266	267	275	279	280	282	284	285	286	289	294	296	303	304	306	308	310
R1042	212	216	217	219	220	223	225	226	227	229	230	231	233	234	235	237	238	239	240	244	247	248	251	253
R1043	203	208	215	221	229	233	241	243	244	245	246	248	253	254	255	256	257	259	260	261	262	263	265	266
R1044	203	204	205	206	207	208	209	210	211	212	213	215	217	219	220	222	223	224	225	226	227	229	233	234
R1045	244	247	249	250	253	255	256	258	259	260	265	266	270	271	272	273	274	276	277	278	281	282	283	285
R1046	221	222	224	225	227	229	230	233	235	236	239	240	246	247	249	251	256	257	258	260	261	265	266	267
R1047	226	228	229	230	232	233	237	239	241	242	245	246	248	249	250	251	253	254	255	256	257	258	259	260
R1048	245	246	252	254	257	261	262	263	264	265	266	267	268	269	271	272	274	276	278	279	280	281	283	290
R1049	246	247	248	249	250	255	256	258	259	260	264	266	267	270	271	273	277	279	280	282	285	286	287	291
R1050	224	226	227	229	232	234	235	240	241	243	244	245	247	248	250	251	255	257	260	261	262	264	266	267
R1051	205	207	220	223	224	226	230	235	236	238	243	244	249	250	251	252	253	254	256	257	259	262	264	267
R1052	237	239	240	242	243	246	247	248	249	251	253	256	257	258	259	260	261	262	264	267	268	269	270	271
R1053	229	230	231	232	238	239	241	242	243	244	247	248	253	254	259	262	266	268	270	271	279	282	284	285
R1054	233	238	239	241	242	245	249	251	252	254	255	256	257	258	261	262	263	265	266	267	268	269	270	273
R1055	224	225	229	232	233	234	235	239	240	242	245	246	247	248	249	252	256	258	261	263	264	265	267	269
R1056	215	222	226	231	232	233	235	237	239	241	242	243	244	245	249	251	254	255	256	258	260	262	263	267
R1057	212	213	214	215	217	220	222	224	226	227	232	233	239	241	243	245	247	248	249	252	254	255	257	260
R1058	207	208	209	210	211	212	214	217	219	220	221	222	223	225	226	227	231	234	235	238	239	241	244	245
R1059	213	219	220	222	223	224	225	226	227	230	231	232	233	235	236	238	241	242	243	245	248	259	260	263
R1060	211	212	213	214	219	220	224	227	229	230	231	232	234	237	239	241	243	244	249	250	254	255	256	257
R1061	210	211	212	213	214	217	219	220	221	223	227	229	234	235	237	238	239	240	242	244	245	246	251	253
R1062	213	214	215	216	221	223	224	225	226	229	232	234	236	238	239	240	241	244	247	250	251	261	263	265
R1063	210	211	212	213	214	217	219	220	222	224	226	227	228	229	230	232	236	237	242	244	250	251	254	256
R1064	217	220	222	223	226	227	236	238	240	243	244	245	249	250	251	252	255	256	257	258	259	261	262	264
R1065	215	217	218	220	222	223	224	226	227	232	238	241	242	243	244	248	249	250	255	261	263	265	266	269
R1066	207	209	210	211	212	213	214	215	216	217	219	220	222	225	227	229	233	234	238	240	242	244	245	246
R1067	205	213	215	224	232	233	235	236	239	240	241	245	248	250	251	253	254	257	259	261	262	263	265	266
R1068	203	204	205	206	207	208	209	210	211	212	217	219	220	221	222	223	226	227	232	236	238	240	241	243
R1069	201	203	204	206	207	209	210	211	212	213	214	216	217	220	222	224	226	227	229	231	232	233	237	238
R1070	232	233	235	241	243	246	251	252	257	262	264	265	266	267	271	283	285	286	288	289	290	294	295	296
R1071	230	232	233	234	235	238	239	240	241	242	243	245	246	249	250	251	256	258	259	261	263	264	265	266
R1072	208	209	210	211	212	213	214	215	217	219	220	223	224	227	228	229	233	237	239	240	242	243	245	249
R1073	219	220	221	223	224	225	231	234	235	238	239	240	241	243	244	250	252	253	258	259	261	263	264	265
R1074	231	232	233	236	238	240	243	245	248	249	251	252	253	255	256	258	259	262	267	268	269	270	271	273
R1075	254	257	261	262	263	265	266	267	270	271	273	275	277	280	285	290	291	295	298	299	300	305	308	311
R1076	210	211	212	213	214	216	219	221	222	224	225	226	227	229	232	239	241	246	249	253	254	255	257	260
R1077	201	204	206	207	208	209	210	211	212	213	214	216	220	222	223	225	227	228	229	232	233	234	235	236
R1078	203	205	214	217	223	225	226	229	230	231	234	235	241	244	245	248	253	254	257	258	261	262	264	265
R1079	212	213	214	216	217	220	222	223	224	226	227	232	233	234	238	239	241	242	247	248	249	251	255	256
R1080	242	244	245	250	251	253	259	260	261	262	264	265	266	267	268	269	271	273	275	277	279	282	286	289

Copyright © 2005 IEEE. All rights reserved.
This is an unapproved draft, subject to change

Table 55A–2—P matrix: location 25 to 48

	C25	C26	C27	C28	C29	C30	C31	C32	C33	C34	C35	C36	C37	C38	C39	C40	C41	C42	C43	C44	C45	C46	C47	C48
R1081	200	201	202	203	204	205	206	209	210	211	212	213	214	216	217	219	220	222	224	225	227	230	232	238
R1082	240	241	244	246	247	250	254	257	259	263	264	265	266	267	268	271	275	280	281	286	287	291	292	294
R1083	209	211	213	215	216	217	218	220	221	223	225	228	230	231	243	244	246	247	249	250	251	254	255	256
R1084	202	203	204	206	207	208	209	210	211	212	213	214	215	217	219	220	223	225	226	231	232	233	234	236
R1085	289	291	292	293	294	295	296	298	299	301	302	303	304	306	307	310	311	313	314	315	316	318	320	322
R1086	210	211	212	213	214	217	219	220	222	225	227	229	230	232	238	239	240	241	244	246	247	250	251	253
R1087	208	209	213	214	215	219	223	225	226	227	229	230	231	232	233	236	238	239	241	242	243	246	247	252
R1088	220	222	223	224	225	227	228	232	238	239	240	243	244	247	248	249	250	252	254	256	257	258	259	261
R1089	226	227	229	231	232	234	235	236	239	241	246	247	248	250	251	253	254	255	259	261	262	264	266	267
R1090	246	249	251	253	254	256	259	260	261	263	264	268	269	271	272	273	274	276	277	278	279	280	281	282
R1091	212	213	217	219	220	221	222	223	224	227	233	234	235	236	239	240	244	245	246	247	248	249	250	253
R1092	206	207	208	209	210	211	212	213	214	215	217	218	219	220	222	223	224	227	233	234	242	243	244	245
R1093	206	207	209	210	211	212	213	214	215	217	219	220	221	222	223	224	225	226	227	229	232	238	240	241
R1094	233	234	236	237	241	243	245	249	253	256	257	258	259	260	261	262	263	264	268	269	273	275	279	283
R1095	185	187	188	190	191	192	193	194	195	197	198	200	201	202	204	206	207	208	210	211	212	213	214	217
R1096	257	259	260	262	263	267	269	271	272	274	275	276	278	280	281	282	283	287	291	292	293	294	296	298
R1097	207	213	215	216	217	218	220	223	224	225	226	229	230	231	233	234	235	239	242	243	245	246	249	251
R1098	199	200	201	202	203	204	205	206	207	209	210	211	212	214	217	219	220	222	227	228	229	230	231	232
R1099	236	238	239	240	241	243	244	245	249	251	253	257	259	262	263	264	265	270	271	273	277	278	281	282
R1100	204	206	207	209	210	211	212	217	219	220	221	223	225	227	229	230	234	236	237	239	244	245	248	249
R1101	200	201	202	205	206	207	208	210	211	212	213	219	220	225	226	227	229	230	234	243	247	252	253	254
R1102	204	205	206	208	209	210	211	212	213	214	215	219	220	222	227	231	232	235	236	240	241	243	245	246
R1103	218	227	228	229	231	233	234	235	238	239	240	241	243	244	247	248	249	250	252	256	257	258	259	260
R1104	311	315	318	320	321	322	323																	
R1105	199	200	201	203	204	206	208	209	210	211	212	213	221	223	224	225	227	229	230	231	234	235	236	237
R1106	247	248	249	250	251	253	258	261	268	269	270	271	272	274	276	277	278	281	283	285	287	291	293	297
R1107	223	224	228	231	234	235	237	240	242	243	247	250	252	253	254	255	259	260	263	264	267	268	273	275
R1108	237	238	241	242	243	244	247	249	250	252	253	257	260	261	263	265	266	267	268	269	272	274	276	278
R1109	221	225	226	229	230	231	232	237	241	242	244	247	248	250	251	255	256	258	259	260	263	265	266	268
R1110	205	206	207	209	210	211	212	213	214	215	219	221	222	226	227	228	229	230	231	232	233	234	235	236
R1111	248	249	251	252	253	254	255	256	257	258	262	264	265	271	275	276	277	280	281	283	284	285	286	287
R1112	215	216	219	220	221	228	232	233	234	237	239	241	242	248	249	250	253	254	255	256	257	258	259	260
R1113	237	238	239	241	242	247	248	250	251	252	254	255	257	259	262	265	266	267	271	272	273	274	275	276
R1114	249	251	252	253	255	258	259	260	265	266	267	268	269	271	273	275	279	280	281	282	284	285	291	292
R1115	223	225	230	232	233	234	239	240	241	244	245	247	249	250	251	252	253	257	258	259	262	264	265	271
R1116	204	206	207	208	210	211	212	213	215	216	219	220	221	222	223	227	228	230	231	233	234	242	244	248
R1117	230	232	233	234	235	238	239	241	242	244	245	246	248	249	250	251	255	256	257	260	262	263	264	266
R1118	203	205	206	207	210	211	212	213	214	215	216	219	220	222	223	227	228	229	230	231	233	234	236	240
R1119	220	221	222	223	224	227	229	236	237	238	243	244	245	247	249	252	254	256	257	258	259	264	265	266
R1120	223	225	226	229	230	234	248	254	257	261	263	264	265	266	273	275	280	281	282	285	286	287	288	289
R1121	202	203	204	205	206	207	209	210	211	213	214	216	217	219	220	221	222	223	225	228	230	232	233	234
R1122	221	223	225	226	231	232	233	238	239	240	242	243	244	249	251	254	257	258	262	264	268	269	270	271
R1123	203	204	205	206	207	208	210	211	212	215	216	217	219	220	221	222	223	225	226	227	230	232	233	239
R1124	235	237	238	239	242	243	244	245	246	251	252	253	255	256	257	258	260	262	263	268	269	270	271	273
R1125	240	243	244	245	246	248	252	255	261	263	264	265	266	267	270	273	280	282	283	284	285	287	288	290
R1126	204	205	206	207	209	210	211	212	213	214	215	217	219	220	222	224	225	226	227	229	230	234	239	244
R1127	236	242	243	246	247	250	263	265	266	277	279	281	284	285	287	289	291	293	294	296	298	300	301	302
R1128	195	197	198	201	202	204	205	206	207	209	210	211	212	213	217	220	222	224	225	230	231	232	233	234
R1129	233	235	236	238	239	240	241	245	248	250	251	252	253	259	260	261	263	264	265	266	267	268	270	271
R1130	224	225	226	230	232	238	239	240	241	242	244	246	247	248	250	252	254	257	258	260	261	262	263	264
R1131	234	235	236	238	240	243	245	247	248	255	257	259	261	262	263	264	268	270	277	278	279	280	281	282
R1132	243	246	247	251	253	259	261	263	264	265	267	268	269	273	275	277	282	284	285	286	287	289	290	291
R1133	287	295	301	303	305	309	310	311	313	319	320	322	323	324	325									
R1134	224	226	233	234	235	236	237	238	240	242	244	245	246	247	249	250	251	252	253	255	259	263	264	267
R1135	217	219	221	222	224	225	227	228	230	232	233	234	238	243	245	248	252	254	256	263	264	268	270	272
R1136	224	226	231	233	234	235	236	237	238	240	246	252	253	254	255	257	260	262	265	266	267	270	273	275
R1137	221	222	224	226	227	228	232	233	235	237	238	239	240	242	244	245	246	247	249	250	251	252	256	258
R1138	217	222	226	230	231	232	234	236	237	239	240	241	242	243	244	245	246	247	248	249	250	252	253	256
R1139	217	218	220	221	223	231	233	235	236	238	243	245	246	249	252	253	255	259	260	263	264	270	273	274
R1140	261	262	263	264	267	269	271	273	277	279	281	285	291	292	293	294	297	298	299	301	302	303	304	305

Copyright © 2005 IEEE. All rights reserved.
This is an unapproved draft, subject to change

Table 55A–2—P matrix: location 25 to 48

	C25	C26	C27	C28	C29	C30	C31	C32	C33	C34	C35	C36	C37	C38	C39	C40	C41	C42	C43	C44	C45	C46	C47	C48
R1141	204	206	207	208	209	210	211	212	217	218	219	222	223	225	227	229	233	234	236	242	243	244	245	246
R1142	268	270	272	274	276	278	281	283	284	285	286	287	289	290	293	294	295	296	300	302	304	307	308	309
R1143	254	257	259	262	264	265	266	267	268	269	272	274	275	276	278	280	283	284	285	286	287	293	294	296
R1144	249	250	254	255	256	257	258	259	262	263	264	265	266	270	271	272	273	274	276	277	278	281	282	284
R1145	223	225	226	229	231	232	235	237	238	239	240	241	242	243	245	246	247	248	249	252	263	264	265	267
R1146	209	210	211	212	213	214	215	216	217	220	222	224	225	227	229	233	236	238	239	240	241	242	244	249
R1147	205	214	216	220	222	223	229	233	234	235	236	237	238	239	240	241	242	244	245	248	249	250	251	253
R1148	245	248	250	251	253	256	257	258	259	260	261	262	265	266	267	268	269	271	273	279	281	283	284	288
R1149	235	236	237	238	239	242	243	244	245	248	249	250	252	253	256	258	259	260	262	268	269	270	271	273
R1150	200	201	203	204	206	207	209	210	211	212	213	215	217	219	220	222	223	227	228	233	238	239	240	243
R1151	247	249	250	255	256	258	259	260	261	263	264	265	266	272	273	274	276	277	278	279	281	282	285	286
R1152	207	208	209	210	211	212	213	214	215	217	219	220	221	222	223	225	226	233	234	235	238	240	243	244
R1153	207	208	209	210	211	212	213	214	217	219	220	221	222	223	224	225	227	239	244	246	248	249	252	253
R1154	235	241	249	251	252	253	254	256	257	258	260	261	262	263	265	267	268	271	273	275	277	279	280	288
R1155	196	197	198	200	201	202	204	205	206	208	209	210	211	212	213	215	218	219	222	224	226	227	229	231
R1156	238	239	241	243	244	245	246	250	251	253	254	255	259	261	263	264	265	266	267	268	269	272	274	276
R1157	240	243	244	248	250	253	254	255	259	264	265	266	268	269	270	271	275	290	291	292	293	294	296	298
R1158	214	217	219	220	221	223	224	225	227	229	231	232	233	234	236	237	239	241	242	244	246	249	250	251
R1159	193	194	198	202	203	213	214	216	223	225	226	236	239	243	245	248	249	251	253	254	255	256	258	260
R1160	201	203	204	206	207	209	210	211	212	213	214	215	217	219	220	222	223	224	225	227	229	232	233	236
R1161	325																							
R1162	212	213	217	219	220	221	222	223	224	225	227	229	233	235	239	240	243	249	251	256	258	261	263	267
R1163	200	201	202	204	205	206	207	208	209	210	211	212	213	214	215	216	220	221	222	223	224	226	227	231
R1164	205	208	216	222	223	224	225	227	228	231	233	234	235	237	240	242	245	249	250	252	253	255	256	258
R1165	200	201	203	204	205	206	208	209	210	211	212	213	215	219	222	224	225	226	227	229	231	233	234	235
R1166	205	207	215	222	224	225	228	229	230	233	235	239	240	244	245	246	247	248	250	251	252	256	257	260
R1167	215	216	217	220	222	223	226	227	230	233	235	239	240	243	245	246	247	248	252	254	255	257	259	260
R1168	263	265	272	273	274	276	277	278	279	280	281	282	283	284	285	286	287	289	291	294	296	297	299	301
R1169	216	217	223	225	231	233	234	235	236	237	240	242	244	245	246	249	252	254	255	256	258	259	262	263
R1170	226	232	233	235	236	240	243	245	246	247	248	251	252	254	255	256	257	260	262	264	268	269	270	271
R1171	213	214	217	219	220	223	224	225	227	228	229	231	233	236	237	242	244	246	250	251	252	254	257	260
R1172	246	247	252	253	256	263	265	266	272	273	274	276	277	278	280	281	282	285	286	287	288	291	294	299
R1173	207	209	210	211	212	213	214	216	219	221	222	223	225	226	227	228	230	232	234	235	236	237	239	241
R1174	229	232	233	235	237	239	241	243	244	246	247	250	252	253	255	256	258	259	261	262	263	267	268	269
R1175	230	231	233	236	237	238	242	246	248	249	251	252	253	254	256	257	258	259	261	263	265	266	267	268
R1176	227	230	233	235	238	239	243	244	245	247	249	250	252	253	257	261	262	263	267	269	270	271	273	275
R1177	205	206	207	208	209	210	211	212	213	214	215	217	219	220	222	223	226	227	229	232	235	236	240	244
R1178	207	208	209	210	211	212	213	214	215	220	221	222	224	225	226	227	230	232	234	236	240	241	245	246
R1179	232	234	235	236	241	244	245	246	247	252	256	258	259	260	261	263	264	267	269	273	275	277	279	280
R1180	208	209	221	223	225	229	230	233	234	236	238	242	248	251	253	254	256	258	261	263	264	268	272	273
R1181	212	214	217	219	220	222	223	225	226	227	229	231	232	233	234	241	242	247	248	249	251	252	253	254
R1182	208	214	216	219	221	223	224	229	230	232	233	234	235	241	245	247	248	249	250	251	252	253	254	256
R1183	200	201	202	204	206	208	209	210	211	212	213	214	215	217	219	220	222	227	233	235	238	239	242	243
R1184	207	208	209	210	211	212	213	214	217	219	220	223	224	225	226	227	229	234	237	238	242	243	246	249
R1185	233	235	236	237	241	242	243	249	250	251	253	254	255	265	267	271	272	273	274	276	277	278	279	281
R1186	282	283	284	285	287	289	292	293	294	295	296	297	298	299	301	302	304	305	309	310	315	318	320	321
R1187	201	202	204	205	206	207	209	210	211	212	214	215	216	217	219	220	222	223	225	226	227	229	230	234
R1188	248	252	260	262	263	264	265	266	272	273	274	276	278	279	280	282	283	284	288	289	290	293	298	300
R1189	217	218	219	225	226	228	229	230	232	233	235	240	241	244	248	249	250	255	256	257	258	259	260	261
R1190	251	253	256	257	258	259	260	261	262	263	270	271	275	277	280	283	287	288	289	291	295	296	297	304
R1191	224	225	237	247	250	253	257	258	259	260	264	265	267	268	269	270	271	272	273	274	275	276	278	280
R1192	200	201	202	204	205	206	207	208	209	210	211	212	213	214	217	219	220	221	222	223	224	225	227	228
R1193	233	236	237	238	239	242	243	244	246	247	249	250	251	255	256	257	258	259	260	261	262	264	265	266
R1194	203	204	205	206	207	208	209	210	211	212	213	217	219	220	221	222	224	227	230	234	235	236	238	239
R1195	211	212	216	219	220	222	224	225	226	227	230	231	232	233	234	240	241	242	243	244	246	250	252	253
R1196	245	246	249	255	256	258	260	263	267	273	275	280	281	282	283	284	285	287	288	289	291	292	296	302
R1197	226	227	229	232	233	234	236	238	239	240	241	245	247	248	257	260	261	262	264	265	271	272	273	274
R1198	229	230	231	232	234	236	240	243	245	248	249	252	254	255	259	260	261	265	266	270	272	273	274	276
R1199	214	216	218	223	224	226	228	231	233	234	236	243	244	246	247	250	251	253	256	258	259	263	264	266
R1200	211	212	213	216	219	220	221	222	223	224	225	226	227	229	230	231	234	235	236	240	243	245	246	247

Copyright © 2005 IEEE. All rights reserved.
This is an unapproved draft, subject to change

Table 55A–2—P matrix: location 25 to 48

	C25	C26	C27	C28	C29	C30	C31	C32	C33	C34	C35	C36	C37	C38	C39	C40	C41	C42	C43	C44	C45	C46	C47	C48
R1201	221	222	223	224	225	226	230	232	233	235	238	241	243	244	245	246	250	251	253	254	256	257	258	259
R1202	293	299	305	306	309	313	315	316	317	319	320	321	322	323	325									
R1203	200	201	202	204	205	206	207	209	210	211	212	214	217	219	220	221	225	226	227	229	230	232	234	235
R1204	234	237	239	240	242	243	244	246	247	248	249	250	254	255	256	258	259	260	265	266	267	270	272	273
R1205	210	211	212	215	217	219	220	221	222	223	225	226	227	229	233	234	238	239	244	245	248	249	251	254
R1206	215	217	223	224	225	226	229	230	231	232	236	238	240	241	246	247	251	252	254	255	257	262	263	265
R1207	220	221	225	226	229	230	233	235	238	239	240	246	247	248	251	253	258	261	263	264	265	266	268	269
R1208	212	213	216	217	219	220	223	225	226	227	230	233	236	237	240	241	245	248	251	252	255	256	257	258
R1209	224	225	226	229	233	235	236	239	240	242	243	246	249	250	252	253	254	255	256	258	261	263	267	270
R1210	215	218	219	220	223	224	225	226	230	231	232	234	235	238	239	240	241	245	247	248	255	256	257	258
R1211	201	202	203	204	205	206	209	210	211	212	215	217	219	220	221	222	224	227	232	235	236	240	241	242
R1212	212	213	214	217	219	222	223	225	226	227	229	232	233	235	236	238	240	241	243	249	250	251	252	254
R1213	220	222	223	224	225	227	231	232	234	236	241	244	245	246	248	249	250	252	256	257	261	262	263	264
R1214	199	200	201	202	203	204	205	206	207	208	209	210	211	212	213	214	215	216	220	222	224	225	226	227
R1215	248	251	252	254	255	257	260	261	262	264	267	279	282	285	286	287	290	292	294	296	297	298	300	301
R1216	208	209	210	211	212	213	214	217	219	220	221	222	225	226	227	229	230	235	236	238	239	240	244	246
R1217	244	245	246	247	248	250	252	253	254	257	259	260	261	262	263	268	269	270	275	277	280	281	285	287
R1218	210	211	212	214	217	222	223	224	226	227	229	234	236	240	242	246	252	253	255	260	261	263	264	265
R1219	241	245	246	247	249	251	253	254	256	258	260	264	267	270	271	273	275	277	279	280	282	286	289	290
R1220	211	212	213	214	216	217	218	221	222	224	225	226	227	232	233	236	238	239	241	242	243	244	248	251
R1221	198	199	200	201	202	203	204	205	206	207	209	210	211	212	213	217	219	220	222	223	226	227	228	229
R1222	224	230	231	232	233	234	235	236	239	240	241	242	243	244	245	249	250	251	254	256	258	259	260	264
R1223	210	212	218	220	221	222	223	225	226	227	228	230	231	232	235	236	238	239	241	242	243	252	255	257
R1224	252	255	256	257	258	261	262	265	266	267	282	283	284	286	288	292	296	297	298	299	302	303	304	308
R1225	211	212	213	214	217	219	220	222	223	225	226	227	233	234	235	236	238	245	248	251	252	257	260	262
R1226	250	251	253	255	256	257	258	260	261	268	269	271	273	275	277	282	283	287	288	293	294	295	302	303
R1227	210	211	212	213	217	219	220	221	222	223	225	226	227	233	234	238	242	244	245	246	247	248	257	262
R1228	195	198	202	205	213	215	216	221	223	225	228	229	231	234	238	247	249	250	252	260	261	263	265	266
R1229	225	227	228	229	230	235	238	243	244	247	248	249	250	251	252	253	256	257	258	262	264	265	266	267
R1230	211	212	213	214	217	219	220	223	224	225	226	227	229	232	233	236	237	238	239	240	241	242	243	251
R1231	208	209	210	211	212	213	214	215	217	220	221	222	226	227	229	230	233	235	236	238	240	242	244	247
R1232	243	246	247	248	251	253	254	257	258	262	263	266	267	270	273	275	279	280	286	288	290	291	293	295
R1233	222	224	225	227	232	236	239	241	247	248	249	252	253	255	256	258	259	261	265	266	268	269	273	275
R1234	203	204	205	206	207	209	210	211	212	213	217	219	220	221	222	224	227	230	234	235	236	244	245	246
R1235	235	239	242	243	245	247	248	249	253	254	255	256	258	260	261	263	264	265	267	269	270	271	272	273
R1236	239	241	244	247	250	251	255	257	259	261	262	263	264	265	266	267	271	272	274	276	280	282	283	284
R1237	227	228	229	230	231	232	233	240	241	243	244	245	247	250	253	254	255	257	259	263	264	267	268	269
R1238	203	207	215	220	222	224	225	226	229	230	235	236	237	238	239	242	243	244	247	248	251	253	255	258
R1239	213	215	218	220	221	223	224	225	230	235	236	238	239	242	245	246	247	248	249	253	255	256	258	259
R1240	203	215	216	217	230	231	232	234	237	241	243	244	247	250	251	254	260	262	266	267	279	281	285	286
R1241	200	201	202	203	204	205	206	207	209	210	211	212	213	214	222	227	229	231	232	233	234	235	236	237
R1242	241	243	244	245	248	249	250	252	254	255	256	258	259	261	270	271	272	273	274	275	276	277	278	279
R1243	244	245	247	248	249	250	253	254	255	256	257	258	259	260	262	265	267	268	269	270	273	275	277	280
R1244	214	216	217	219	222	225	227	231	232	233	234	235	238	240	241	243	244	246	250	251	252	254	255	263
R1245	240	241	243	246	251	252	253	254	259	260	261	264	265	266	271	272	273	274	276	277	278	279	282	283
R1246	217	219	220	222	224	226	227	228	229	232	241	244	245	246	251	252	254	256	258	261	264	267	269	270
R1247	249	251	253	254	255	256	257	258	259	262	263	264	266	267	270	271	272	274	276	277	278	279	282	284
R1248	236	238	239	242	243	245	246	247	249	252	253	254	255	256	258	260	261	263	266	267	272	274	276	279
R1249	207	209	211	213	214	215	216	217	218	219	222	225	228	229	230	231	233	234	235	237	239	242	244	246
R1250	216	219	220	221	222	225	229	230	232	233	235	236	239	240	241	246	247	248	249	252	254	257	259	261
R1251	214	215	216	217	220	221	222	223	224	225	227	230	233	234	240	241	244	245	246	250	251	253	255	259
R1252	222	223	224	226	227	229	230	232	234	241	245	246	249	251	253	254	256	258	260	265	266	268	271	273
R1253	206	207	208	209	210	211	212	213	214	216	217	219	222	224	225	227	229	232	233	236	239	244	249	252
R1254	212	213	214	216	217	219	222	223	227	233	235	239	241	243	244	245	246	247	249	250	251	252	254	255
R1255	224	225	228	229	230	231	232	237	238	241	242	244	245	246	248	250	253	254	257	259	263	265	271	272
R1256	207	209	210	211	212	213	214	219	220	222	227	230	231	232	235	238	240	241	242	244	245	248	249	250
R1257	247	248	251	252	253	254	257	259	260	262	263	265	266	268	269	270	273	277	280	281	284	285	286	287
R1258	207	208	210	211	212	214	216	219	220	221	222	223	226	227	229	230	231	233	234	236	239	240	242	243
R1259	211	212	213	215	217	219	220	223	224	225	227	232	233	234	235	236	237	238	240	242	244	246	247	248
R1260	234	236	237	239	240	241	242	244	247	248	250	252	253	256	257	259	260	261	262	265	266	267	268	269

Copyright © 2005 IEEE. All rights reserved.
This is an unapproved draft, subject to change

Table 55A–2—P matrix: location 25 to 48

	C25	C26	C27	C28	C29	C30	C31	C32	C33	C34	C35	C36	C37	C38	C39	C40	C41	C42	C43	C44	C45	C46	C47	C48
R1261	195	199	203	213	214	215	216	217	219	223	226	227	232	234	235	237	240	241	242	243	244	246	247	248
R1262	195	196	197	198	200	201	202	204	205	206	208	209	210	211	212	213	214	215	219	220	221	222	223	227
R1263	224	229	230	236	239	242	243	244	245	248	250	253	254	255	257	261	262	264	265	266	267	270	272	274
R1264	193	194	196	198	216	217	223	224	225	226	229	231	232	234	235	236	237	241	242	244	245	248	252	257
R1265	221	223	224	225	226	232	233	234	235	238	239	241	242	245	247	249	250	251	252	255	256	257	259	262
R1266	222	223	225	226	227	232	233	235	236	239	241	243	246	248	249	251	253	255	256	257	258	260	262	263
R1267	208	210	211	212	214	215	217	218	222	223	227	233	234	235	238	239	240	245	247	249	252	253	255	257
R1268	219	220	221	222	224	225	226	227	229	230	231	232	233	234	236	238	240	241	242	243	244	245	246	247
R1269	202	205	214	215	216	221	223	229	232	233	234	235	236	241	243	244	246	248	250	254	257	259	260	263
R1270	255	265	266	273	280	281	282	288	289	290	291	293	300	301	302	306	307	309	312	313	317	320	322	323
R1271	239	240	241	243	244	247	249	257	259	262	263	264	265	267	270	271	273	277	279	281	282	284	285	286
R1272	210	211	212	216	217	219	220	222	223	224	227	230	233	234	235	238	239	240	243	244	246	247	250	251
R1273	216	217	222	226	229	230	231	232	233	234	235	237	238	241	248	249	250	251	252	253	254	256	257	258
R1274	280	282	289	290	295	297	299	300	301	303	305	306	307	308	309	310	312	315	316	317	318	320	321	
R1275	194	195	196	198	202	205	207	221	222	223	224	226	231	232	236	237	238	241	242	245	247	249	251	254
R1276	214	217	219	221	222	224	225	226	227	228	232	234	239	240	244	247	248	249	250	251	254	256	257	258
R1277	210	211	212	213	214	215	217	219	222	225	227	230	233	235	236	239	242	243	244	246	247	250	252	253
R1278	246	247	250	253	255	257	259	260	261	264	268	269	271	272	273	274	276	277	279	280	281	282	283	284
R1279	215	216	223	224	225	226	227	229	230	231	232	234	235	236	238	239	241	242	243	245	248	249	252	253
R1280	215	217	224	225	229	231	232	233	238	239	241	243	245	247	248	250	252	254	255	257	259	260	262	267
R1281	213	217	219	220	221	222	223	224	226	227	232	233	234	235	241	244	245	248	249	250	252	254	256	257
R1282	244	245	247	250	252	253	254	255	257	259	260	262	264	266	269	270	271	277	280	281	289	290	292	293
R1283	204	205	206	207	208	209	210	211	212	213	216	217	219	220	221	222	223	224	226	227	228	230	232	233
R1284	245	246	247	248	251	253	254	255	257	259	262	263	267	268	269	271	275	276	280	284	287	290	293	294
R1285	244	246	247	249	250	251	252	255	256	258	259	260	261	264	265	270	271	273	277	280	281	282	283	284
R1286	243	244	245	247	248	249	250	251	252	253	256	258	261	262	263	265	266	271	275	277	279	280	282	283
R1287	203	204	205	206	207	210	211	212	217	219	220	223	224	227	229	231	232	233	234	236	237	238	239	240
R1288	193	194	195	197	199	200	201	203	204	205	206	207	209	210	211	212	213	217	220	222	224	225	226	227
R1289	221	225	226	229	233	234	236	238	239	241	243	244	245	248	249	250	253	254	255	256	259	260	261	266
R1290	201	203	204	206	207	208	209	210	211	212	217	219	220	221	222	225	226	227	229	230	233	234	236	240
R1291	205	213	214	216	218	221	224	230	232	233	235	236	238	239	240	241	247	248	249	250	252	256	258	261
R1292	274	276	277	278	279	283	284	285	286	287	291	295	297	298	300	305	306	307	308	313	314	315	316	317
R1293	198	199	200	201	202	203	204	206	208	209	210	211	212	213	214	215	216	219	220	221	226	227	229	230
R1294	235	236	237	238	240	243	244	246	249	250	253	255	256	258	260	272	273	274	275	276	277	278	280	281
R1295	216	217	221	226	230	232	233	234	237	238	241	244	245	247	249	250	254	257	259	264	265	266	267	271
R1296	230	233	235	236	238	245	247	249	250	251	252	253	254	256	258	259	261	263	264	265	266	269	271	277
R1297	208	215	216	222	226	229	231	236	237	243	244	248	249	250	251	252	253	256	257	258	259	261	262	264
R1298	203	216	221	222	223	237	239	240	241	243	244	246	247	249	251	254	257	258	260	262	265	271	286	287
R1299	202	204	205	206	207	209	210	211	212	213	214	215	216	217	220	224	226	227	233	236	238	239	246	247
R1300	202	203	204	206	207	210	211	212	214	216	217	219	220	225	227	229	232	235	236	237	238	239	240	241
R1301	225	226	227	228	233	234	235	236	238	244	245	246	248	250	251	253	256	257	258	259	262	263	268	270
R1302	206	207	208	209	210	211	212	213	214	215	219	220	222	226	230	234	235	236	238	239	243	244	246	248
R1303	247	248	249	252	253	256	258	261	262	263	264	265	266	268	269	271	272	273	274	275	276	277	278	281
R1304	211	212	213	214	215	216	220	222	223	224	226	227	229	231	237	239	240	242	243	244	245	247	250	252
R1305	253	257	259	260	261	262	273	275	279	280	281	282	289	294	295	296	300	301	302	304	306	307	308	309
R1306	221	223	226	228	230	232	235	238	239	240	241	244	246	247	249	250	251	252	253	254	256	258	261	265
R1307	248	252	254	255	256	258	259	260	264	265	266	267	268	269	275	279	282	284	286	287	292	297	298	299
R1308	210	211	212	214	217	219	220	222	223	224	227	233	236	238	239	240	243	244	245	246	247	249	250	251
R1309	205	208	215	222	223	224	230	232	233	234	235	236	237	238	240	241	242	243	244	245	247	254	255	259
R1310	226	232	233	235	236	238	240	241	242	243	244	249	252	254	255	256	257	259	261	262	264	266	270	271
R1311	211	212	214	219	220	223	226	227	229	231	232	233	234	235	237	239	240	241	242	245	246	247	248	250
R1312	217	223	224	226	231	235	236	238	239	240	242	243	245	247	249	250	255	256	258	259	261	263	264	268
R1313	203	204	206	207	208	209	210	211	212	213	214	215	216	217	220	221	222	223	227	228	230	232	233	235
R1314	200	205	213	219	220	223	226	227	228	230	231	232	234	236	240	241	243	246	248	249	252	253	256	257
R1315	246	249	251	252	260	261	265	266	267	273	275	277	279	280	281	282	286	291	292	293	294	296	297	298
R1316	252	254	255	256	258	259	267	268	269	270	272	274	276	278	281	282	284	285	286	287	288	290	292	293
R1317	256	258	265	266	267	271	272	274	275	276	278	281	282	286	288	289	290	291	294	298	300	301	302	303
R1318	209	210	211	212	213	214	215	216	217	219	220	222	225	226	227	234	235	238	239	241	243	244	248	249
R1319	214	215	217	218	221	222	223	224	226	227	232	233	234	236	238	239	240	244	245	246	247	249	250	251
R1320	273	275	277	280	285	287	289	290	291	299	305	306	309	310	313	316	317	320	322	323	325			

Copyright © 2005 IEEE. All rights reserved.
This is an unapproved draft, subject to change

Table 55A–2—P matrix: location 25 to 48

	C25	C26	C27	C28	C29	C30	C31	C32	C33	C34	C35	C36	C37	C38	C39	C40	C41	C42	C43	C44	C45	C46	C47	C48
R1321	223	224	227	232	233	234	235	237	238	241	242	245	248	251	252	253	257	260	261	262	263	264	267	269
R1322	200	201	202	203	204	206	207	208	209	210	211	212	214	216	217	219	221	223	227	229	230	233	235	237
R1323	217	221	223	224	232	234	235	236	238	241	242	243	245	246	247	248	252	254	256	257	258	259	260	262
R1324	232	235	236	239	240	241	245	248	251	252	253	259	260	263	266	268	269	270	272	274	276	278	280	282
R1325	200	202	203	205	213	215	216	217	223	224	226	229	231	233	236	239	243	246	249	250	251	252	255	256
R1326	225	226	227	229	231	233	234	236	238	239	241	244	246	249	250	251	254	255	257	259	262	263	264	267
R1327	226	228	229	231	232	233	238	240	241	242	243	254	255	263	267	271	272	273	274	275	276	278	279	281
R1328	216	217	218	219	220	222	223	224	227	228	229	232	234	235	236	237	238	239	240	241	242	243	248	249
R1329	286	287	290	295	308	309	311	313	314	315	316	317	318	319	320	321	322	323	324					
R1330	265	267	268	272	273	274	276	277	278	282	288	293	297	300	302	304	305	306	310	312	314	316	319	321
R1331	198	199	200	201	202	203	204	205	206	207	209	210	211	212	213	214	216	219	222	223	224	226	227	228
R1332	219	220	222	223	225	226	227	232	233	234	235	236	240	241	243	247	250	252	253	255	257	261	262	263
R1333	244	247	250	251	253	255	259	264	267	270	279	280	282	286	289	290	291	294	295	296	297	298	299	302
R1334	233	234	237	239	241	242	243	249	255	256	257	258	260	261	262	263	265	270	271	275	277	279	280	281
R1335	194	197	199	200	201	203	204	206	207	208	209	210	211	212	213	214	215	216	217	219	220	222	225	227
R1336	209	210	211	212	213	214	215	216	217	219	220	222	226	227	232	233	234	235	240	241	243	244	246	248
R1337	215	217	219	220	222	224	225	226	227	232	233	239	243	244	245	246	248	250	252	253	255	256	258	259
R1338	225	226	227	232	233	235	236	237	239	241	242	243	245	246	249	251	252	254	255	256	257	258	261	262
R1339	216	222	223	224	233	237	238	240	241	242	243	244	245	246	247	248	250	253	254	255	257	259	262	264
R1340	240	241	242	245	249	251	253	254	255	257	258	260	268	269	270	272	273	274	276	277	278	279	283	284
R1341	199	202	203	205	208	214	215	216	217	221	222	224	229	230	231	233	234	236	244	247	248	249	250	252
R1342	224	229	230	231	232	235	236	237	240	241	243	244	245	247	248	250	251	253	254	255	256	258	260	262
R1343	215	219	220	221	222	224	225	227	228	230	231	232	233	234	236	238	239	240	241	243	246	247	248	249
R1344	207	208	209	210	211	212	213	214	215	216	217	219	220	221	222	223	227	229	230	232	233	234	235	236
R1345	241	245	247	248	252	254	256	257	258	264	266	267	268	269	275	277	279	280	283	284	285	286	287	288
R1346	235	238	241	242	243	245	246	247	251	254	257	260	261	262	267	270	271	272	274	276	278	280	282	288
R1347	213	214	215	216	217	220	221	222	223	225	230	232	233	234	238	239	241	242	246	248	253	257	259	261
R1348	243	245	246	247	248	251	252	254	256	257	258	259	262	263	265	266	267	268	269	270	275	280	281	282
R1349	236	237	238	239	242	243	244	245	247	248	249	250	252	254	255	259	263	265	266	267	268	270	277	281
R1350	244	246	248	250	252	260	265	266	271	273	277	284	287	290	292	295	297	298	299	302	303	304	305	308
R1351	232	233	238	239	241	244	245	248	249	252	255	256	257	258	262	263	264	267	272	274	276	277	278	279
R1352	216	217	220	222	223	227	229	230	233	234	236	238	239	240	242	243	249	251	253	254	256	258	259	260
R1353	240	241	242	245	246	248	253	255	257	261	264	267	270	271	272	273	274	276	278	280	281	282	283	284
R1354	260	265	266	267	268	271	272	273	274	276	277	278	279	282	283	284	287	290	293	294	295	296	297	298
R1355	207	208	213	215	216	217	219	221	223	224	225	226	231	234	235	237	240	242	243	244	245	246	247	248
R1356	202	203	204	205	206	207	209	210	211	212	214	216	217	218	219	221	222	224	225	227	228	229	232	233
R1357	216	222	223	224	229	233	235	236	237	238	239	240	243	244	246	249	250	253	254	256	258	259	260	263
R1358	201	202	204	205	206	207	209	210	211	212	214	217	219	221	222	226	227	228	229	230	231	232	233	235
R1359	209	214	215	216	217	222	230	231	232	233	234	235	239	240	241	244	247	249	250	252	254	256	258	265
R1360	206	207	208	209	210	211	212	213	214	215	216	217	219	220	222	223	224	225	227	230	232	233	236	238
R1361	200	201	202	204	206	207	209	210	212	214	215	217	220	222	225	227	229	230	232	234	235	236	238	239
R1362	207	209	210	211	212	213	214	215	217	219	221	222	223	224	225	227	233	239	241	245	246	251	252	253
R1363	249	251	252	254	255	256	257	258	262	265	266	268	269	271	273	275	281	283	288	289	291	292	294	296
R1364	213	214	216	217	220	221	222	223	224	225	226	227	229	230	233	234	236	240	243	244	245	250	252	253
R1365	210	211	212	213	214	216	219	220	222	223	224	225	227	229	230	231	237	239	240	243	244	250	251	253
R1366	204	206	207	208	210	211	212	219	220	222	223	224	225	227	231	232	233	234	236	238	239	240	241	242
R1367	235	238	240	241	242	244	245	246	248	250	253	254	255	256	258	259	264	265	268	269	270	277	280	286
R1368	252	253	261	266	267	268	269	275	280	281	284	285	286	290	294	296	300	302	304	305	307	308	312	319
R1369	216	222	223	224	225	228	229	232	233	235	237	240	241	242	243	244	245	248	250	251	252	253	255	257
R1370	227	228	233	234	235	236	237	238	239	240	242	244	247	249	254	256	257	261	262	263	266	267	270	273
R1371	247	250	252	257	259	260	262	263	264	267	268	269	270	271	273	277	279	286	289	290	291	292	297	298
R1372	261	262	264	265	266	268	269	271	273	277	279	281	282	284	285	288	289	291	292	293	296	298	299	304
R1373	196	198	199	202	203	205	208	216	217	224	230	231	234	235	236	237	245	246	252	256	257	258	260	262
R1374	279	282	283	284	290	293	296	300	301	302	306	307	308	312	318	320	322	323	325					
R1375	219	220	222	224	225	226	227	229	233	234	238	239	242	243	244	246	252	253	254	255	257	259	260	261
R1376	223	225	226	227	228	231	233	235	237	240	242	243	244	245	247	248	249	250	251	253	254	255	256	257
R1377	216	217	219	220	221	222	225	226	227	229	232	234	236	238	239	241	243	245	248	249	250	251	252	254
R1378	236	238	239	240	242	243	247	248	257	262	263	268	269	271	272	274	276	277	278	280	281	282	283	284
R1379	202	204	205	206	207	208	209	210	211	212	213	214	215	216	217	219	220	222	224	227	228	229	232	233
R1380	258	259	260	263	267	268	271	275	280	281	283	284	285	286	287	288	290	291	295	296	297	299	300	302

Copyright © 2005 IEEE. All rights reserved.
This is an unapproved draft, subject to change

Table 55A–2—P matrix: location 25 to 48

	C25	C26	C27	C28	C29	C30	C31	C32	C33	C34	C35	C36	C37	C38	C39	C40	C41	C42	C43	C44	C45	C46	C47	C48
R1381	209	213	217	224	225	226	228	231	232	234	235	239	240	241	243	244	247	248	249	250	251	252	253	256
R1382	199	203	214	215	221	222	223	225	226	230	233	234	235	236	237	239	242	243	246	247	252	254	255	259
R1383	224	226	227	231	232	233	234	235	239	241	243	249	255	256	258	261	265	267	269	270	272	273	274	276
R1384	221	223	224	225	227	228	229	230	231	232	233	236	237	239	240	242	243	244	245	246	247	251	257	259
R1385	206	207	209	210	211	212	213	215	220	222	223	225	226	227	229	231	233	235	238	239	242	243	244	249
R1386	245	248	250	251	252	254	256	258	259	260	261	266	267	268	269	271	273	279	281	282	283	284	288	291
R1387	204	206	207	208	210	211	212	216	217	219	220	221	222	225	227	229	232	234	236	242	243	244	246	247
R1388	224	225	226	229	233	234	235	236	238	241	244	245	247	248	253	254	256	257	260	264	268	269	272	273
R1389	239	240	241	244	247	248	250	251	253	254	259	262	265	270	271	275	277	280	286	291	292	293	295	297
R1390	219	220	221	222	223	224	225	227	234	235	236	238	244	245	248	249	250	252	253	254	256	257	258	259
R1391	207	209	210	211	212	214	215	216	219	220	221	222	227	231	234	235	236	238	239	240	245	249	256	258
R1392	260	266	267	268	269	271	272	273	274	276	278	279	282	283	284	285	286	287	288	289	294	301	302	303
R1393	212	213	214	216	217	219	222	227	229	232	235	239	241	243	245	248	252	253	254	255	256	257	258	260
R1394	213	215	216	217	220	221	222	223	224	229	231	232	234	235	236	241	243	247	249	251	252	253	254	256
R1395	229	234	243	244	246	249	250	251	252	253	254	255	258	260	265	266	269	271	275	280	281	282	284	285
R1396	200	201	202	204	206	207	208	209	210	211	212	214	216	218	219	221	222	223	227	230	231	235	237	238
R1397	211	212	214	215	217	219	222	223	224	225	227	232	233	234	240	244	247	255	259	260	263	264	265	266
R1398	209	210	211	212	213	214	215	216	217	219	220	221	223	227	230	231	235	236	237	239	240	242	244	246
R1399	199	200	201	202	203	204	206	207	210	211	212	214	219	220	222	227	230	231	232	233	234	235	238	241
R1400	201	202	204	205	208	209	214	217	218	223	226	228	230	231	232	233	235	236	238	240	241	244	245	251
R1401	209	214	215	217	221	231	234	235	239	242	244	245	246	250	252	254	255	257	259	260	261	263	264	268
R1402	240	241	242	243	245	247	249	251	252	253	255	256	258	259	261	263	264	265	266	268	269	273	275	277
R1403	223	224	225	227	229	231	232	233	234	235	236	241	244	245	246	249	254	256	257	260	262	263	265	266
R1404	201	202	203	204	205	206	209	210	211	212	213	214	215	216	217	220	227	230	232	234	235	236	237	238
R1405	210	211	212	213	215	219	220	222	223	224	225	226	227	229	234	235	236	239	244	247	250	251	255	256
R1406	220	222	223	226	227	228	229	230	231	232	233	234	236	239	241	242	244	250	253	254	255	259	265	266
R1407	210	211	212	213	214	215	217	220	222	225	230	231	233	235	236	238	240	241	244	245	247	248	250	253
R1408	213	215	216	221	224	225	226	232	234	235	239	240	243	244	245	247	248	250	252	253	256	257	258	259
R1409	201	202	204	206	207	208	209	210	211	212	213	214	215	217	218	221	222	226	227	230	233	234	235	238
R1410	229	231	232	233	235	238	239	240	241	242	243	244	245	246	248	249	250	251	253	256	257	258	259	260
R1411	239	240	245	246	247	248	252	253	257	264	265	266	267	269	271	272	273	274	275	277	278	279	282	283
R1412	223	224	226	227	229	230	233	237	238	242	243	245	246	248	251	252	253	257	258	259	260	262	263	267
R1413	233	234	236	241	242	243	245	246	247	249	250	251	252	253	256	258	259	264	265	266	268	269	270	272
R1414	229	230	232	236	241	248	251	257	260	261	262	264	268	269	275	278	280	281	282	283	284	290	291	292
R1415	195	196	198	199	202	205	208	216	223	226	229	230	233	236	237	238	244	247	248	249	252	253	254	256
R1416	220	225	229	235	237	239	240	242	246	248	249	250	253	254	256	258	259	260	261	263	268	269	270	271
R1417	248	250	251	252	253	259	260	265	266	267	268	269	270	271	272	274	276	277	278	280	283	284	286	291
R1418	239	243	244	247	250	251	252	254	255	257	259	260	261	262	263	264	268	269	270	271	272	274	275	276
R1419	234	236	238	240	243	244	245	247	248	249	252	253	255	256	258	261	263	264	265	266	270	273	275	279
R1420	246	247	248	249	250	256	260	264	267	268	271	277	282	283	289	290	291	294	295	296	300	301	302	305
R1421	213	216	217	223	224	226	231	234	235	236	239	240	244	246	247	248	250	252	253	254	260	263	264	267
R1422	205	206	207	210	211	212	213	214	216	219	220	222	223	224	225	227	229	230	231	239	240	242	243	244
R1423	214	216	223	224	226	227	231	232	235	238	240	243	245	246	248	252	253	254	255	256	257	258	259	262
R1424	223	224	226	227	229	232	234	241	244	246	247	249	251	254	256	258	260	261	265	266	267	269	270	272
R1425	261	263	268	269	273	277	280	281	282	285	286	287	289	290	291	292	294	295	296	297	298	302	305	312
R1426	231	232	233	235	236	237	238	239	241	242	243	246	255	257	259	261	262	264	268	269	272	274	276	277
R1427	211	213	214	215	217	219	220	221	224	225	226	228	230	233	234	237	238	242	245	246	248	249	251	252
R1428	238	244	246	247	250	251	258	259	264	266	270	273	279	280	281	282	284	286	288	289	291	294	297	299
R1429	238	241	242	244	249	251	252	259	261	264	265	266	267	268	269	271	272	274	276	278	283	286	287	288
R1430	202	203	204	205	206	207	209	210	211	212	215	217	219	220	221	222	223	225	229	231	232	234	237	238
R1431	214	216	217	218	224	226	228	229	230	231	236	238	242	243	244	247	248	249	250	251	253	254	256	257
R1432	210	211	212	213	214	216	220	222	224	225	227	229	230	231	234	237	238	239	240	242	246	247	251	254
R1433	249	252	253	256	257	258	261	262	263	264	265	266	267	268	269	270	272	273	274	276	277	278	279	284
R1434	214	215	216	219	221	224	225	227	229	231	232	236	241	244	245	248	249	250	251	252	253	254	255	256
R1435	257	258	260	261	262	268	269	271	273	279	285	286	287	289	293	297	300	306	307	308	313	315	316	319
R1436	209	210	211	212	213	215	216	217	219	220	222	223	224	227	230	234	235	238	243	244	246	247	248	250
R1437	196	197	201	203	204	205	206	207	208	209	210	211	212	214	215	217	219	220	221	223	225	226	227	229
R1438	210	211	212	213	217	219	221	224	225	227	230	233	235	237	242	244	245	247	249	250	251	252	253	254
R1439	190	192	194	196	197	198	200	201	202	204	205	206	209	210	211	212	213	216	219	220	221	222	225	227
R1440	213	214	215	216	219	222	223	224	225	227	228	229	230	231	232	233	235	237	240	243	244	245	247	249

Copyright © 2005 IEEE. All rights reserved.
This is an unapproved draft, subject to change

Table 55A–2—P matrix: location 25 to 48

	C25	C26	C27	C28	C29	C30	C31	C32	C33	C34	C35	C36	C37	C38	C39	C40	C41	C42	C43	C44	C45	C46	C47	C48
R1441	203	204	206	207	209	210	211	212	213	214	217	219	221	222	224	227	230	234	238	239	241	243	245	247
R1442	209	210	211	212	213	214	219	220	222	226	227	231	232	233	235	240	241	242	244	247	248	250	252	255
R1443	228	229	230	232	233	234	238	239	241	243	245	246	249	253	254	255	256	257	258	262	263	266	267	270
R1444	223	229	230	233	235	236	239	243	245	248	251	253	255	256	257	258	259	261	262	265	266	267	268	269
R1445	211	212	213	214	215	216	217	219	220	222	223	224	225	226	229	230	231	232	233	234	238	246	254	259
R1446	216	219	220	221	223	224	225	226	228	229	230	231	232	233	237	238	239	242	243	244	246	250	254	255
R1447	214	215	216	217	219	224	225	227	228	233	236	237	242	245	246	247	251	253	259	262	263	264	266	267
R1448	204	205	206	207	208	209	210	211	212	213	214	215	217	219	220	222	225	226	227	230	235	237	239	242
R1449	226	233	234	236	238	239	243	244	245	248	249	250	251	252	253	255	256	257	258	263	264	265	266	267
R1450	214	216	217	219	220	222	223	225	227	229	230	232	234	235	236	237	238	239	240	241	242	245	247	249
R1451	213	214	215	216	219	220	222	223	224	225	226	227	230	231	233	236	238	239	245	246	247	248	249	251
R1452	232	233	240	241	242	245	249	251	252	255	256	258	263	265	266	271	275	277	282	283	286	287	288	289
R1453	214	215	217	220	223	227	229	235	236	237	238	242	243	244	249	251	256	258	260	263	265	266	267	269
R1454	231	233	235	236	238	239	240	245	246	247	248	249	252	255	256	258	261	263	264	269	271	272	274	275
R1455	244	249	250	252	256	257	258	259	262	264	266	270	273	277	279	280	281	283	284	285	287	289	291	292
R1456	226	227	229	230	234	235	238	239	240	245	246	248	252	253	254	255	257	259	260	266	269	271	272	273
R1457	202	204	205	208	209	215	216	217	218	219	220	223	224	226	231	232	233	236	238	239	241	243	244	245
R1458	235	239	243	244	246	247	248	249	250	251	252	254	255	256	258	259	266	268	269	270	271	272	274	275
R1459	224	225	229	230	232	233	234	236	238	239	240	241	243	245	251	253	254	256	257	258	261	268	269	272
R1460	236	238	239	241	244	245	248	249	250	251	253	255	256	259	260	263	265	266	271	272	273	274	275	276
R1461	215	226	228	233	234	240	242	243	247	248	249	252	255	256	257	258	260	261	263	264	266	268	269	271
R1462	214	216	219	220	222	223	224	225	226	227	229	230	233	234	238	239	240	241	249	251	252	256	257	258
R1463	211	212	214	215	217	219	220	222	223	226	227	230	235	244	245	246	247	249	251	254	256	258	259	261
R1464	216	217	220	222	223	224	225	227	230	233	236	238	240	244	245	247	248	250	254	255	259	261	265	266
R1465	201	202	203	204	205	206	207	209	210	211	212	213	214	216	220	221	222	224	225	227	229	230	231	232
R1466	211	212	213	217	219	220	221	222	224	225	226	227	229	230	233	235	238	249	252	256	257	258	259	262
R1467																								
R1468	204	205	206	208	209	210	211	212	213	214	216	217	219	220	221	222	223	224	227	228	229	232	233	234
R1469	204	205	206	209	210	211	212	213	214	216	217	220	223	226	227	232	233	234	235	236	237	238	239	241
R1470	246	250	251	252	253	259	260	261	264	265	266	268	269	273	277	280	281	282	285	289	290	291	292	294
R1471	218	220	222	223	226	230	235	237	238	239	240	244	245	250	251	254	259	261	263	264	266	267	272	274
R1472	257	262	264	265	266	267	270	271	280	282	285	286	287	289	290	293	295	297	303	306	309	310	311	312
R1473	270	272	274	275	276	278	279	280	281	282	283	284	286	287	289	293	294	296	297	302	303	304	305	306
R1474	200	203	207	208	214	217	219	222	226	229	230	231	233	234	235	237	238	239	242	244	247	248	249	250
R1475	207	209	210	211	212	213	217	219	220	221	222	223	225	227	229	232	236	238	239	240	243	244	246	247
R1476	209	211	214	215	221	223	225	228	229	238	239	242	243	244	246	248	250	252	253	255	257	262	263	264
R1477	235	236	238	242	243	248	251	252	254	256	258	259	264	265	267	270	279	283	286	287	288	289	291	293
R1478	224	228	229	237	239	243	244	246	250	253	254	255	257	259	260	262	263	264	267	268	271	275	281	284
R1479	237	242	246	254	260	263	265	266	268	269	270	271	272	273	274	275	276	277	278	280	288	289	290	291
R1480	239	240	241	242	244	245	250	253	254	255	257	262	263	267	270	271	272	273	274	275	277	278	280	283
R1481	202	205	208	213	216	224	225	226	230	231	233	235	238	239	240	246	248	249	250	253	254	256	257	258
R1482	214	216	217	220	222	227	232	234	235	237	238	241	242	243	244	245	246	248	249	250	252	253	256	258
R1483																								
R1484	212	213	214	216	217	219	220	221	222	225	227	229	232	233	235	236	239	241	243	244	245	246	247	250
R1485	225	226	231	235	237	238	239	241	242	243	245	249	251	254	255	256	258	263	265	266	267	269	272	273
R1486	251	254	255	259	261	264	265	266	267	268	269	270	271	273	277	279	291	295	301	303	308	309	310	311
R1487	209	210	211	212	217	219	220	221	222	225	227	230	232	235	239	241	247	253	255	260	263	269	270	275
R1488	207	209	210	211	212	213	214	219	220	221	222	223	224	227	229	231	232	233	234	238	241	251	252	254
R1489	217	218	219	220	221	222	223	225	227	228	229	233	239	240	243	246	247	251	253	254	255	257	261	262
R1490	208	209	210	212	214	216	217	220	222	226	227	229	232	234	235	236	241	243	244	245	246	248	250	251
R1491	250	251	252	254	260	261	265	266	270	273	277	279	281	282	284	285	286	290	292	293	294	295	297	298
R1492	234	235	242	243	248	252	253	254	260	261	263	264	266	267	270	272	273	274	275	276	277	278	279	280
R1493	232	234	235	236	238	239	241	244	245	246	247	249	251	252	253	255	260	262	263	266	268	269	272	274
R1494	221	222	223	224	225	226	227	234	235	238	240	242	244	245	246	247	248	249	250	252	253	254	256	257
R1495	196	205	214	215	216	217	224	226	228	229	230	231	233	234	236	237	240	242	245	249	251	253	254	255
R1496	208	209	210	211	212	219	220	221	222	223	224	225	227	229	230	231	232	233	235	237	239	240	241	242
R1497	213	214	219	221	222	223	225	226	227	229	231	233	235	238	239	240	243	244	247	248	249	250	254	256
R1498	206	207	209	210	211	212	213	214	215	219	220	221	222	224	227	230	233	234	236	244	245	246	247	248
R1499	199	200	201	203	204	206	207	209	210	211	212	213	214	215	219	220	221	223	224	225	227	229	231	232
R1500	200	201	204	205	206	208	209	210	211	212	213	216	219	221	222	227	230	231	236	239	240	243	244	246

Copyright © 2005 IEEE. All rights reserved.
This is an unapproved draft, subject to change

Table 55A–2—P matrix: location 25 to 48

	C25	C26	C27	C28	C29	C30	C31	C32	C33	C34	C35	C36	C37	C38	C39	C40	C41	C42	C43	C44	C45	C46	C47	C48
R1501	206	207	208	209	210	211	212	213	214	216	220	221	222	223	225	227	229	230	231	234	235	245	246	247
R1502	222	223	225	226	228	229	230	231	235	236	237	238	240	243	244	247	249	250	252	253	254	255	268	270
R1503	283	284	287	291	293	294	296	297	302	303	304	305	307	308	309	310	311	314	315	316	318	319	320	321
R1504	258	259	260	261	262	263	264	268	269	270	271	273	277	282	283	284	287	288	290	291	293	294	295	296
R1505	207	215	221	224	225	230	233	235	238	239	240	243	245	246	247	249	256	259	260	261	263	264	265	266
R1506	196	197	199	200	201	204	206	207	209	210	211	212	213	216	219	220	221	225	226	227	231	233	234	236
R1507	206	207	208	209	210	211	212	213	217	219	220	222	223	224	225	226	227	236	238	242	244	245	247	248
R1508	210	211	212	213	216	219	220	221	223	226	227	230	231	232	234	238	239	240	248	251	253	254	264	265
R1509	216	217	220	221	222	223	227	230	232	234	235	236	241	246	248	251	257	261	262	264	266	267	269	275
R1510	209	210	211	212	213	214	219	220	221	222	223	224	225	226	227	229	230	231	234	235	238	239	240	241
R1511	230	234	237	238	239	243	244	245	246	250	251	252	254	255	259	261	264	265	267	268	269	271	272	274
R1512	205	213	217	223	224	226	231	232	233	235	236	238	240	241	243	244	245	246	247	248	249	250	251	252
R1513	209	211	214	217	219	221	229	231	232	235	236	237	238	240	241	242	243	247	248	249	250	251	255	256
R1514	220	226	232	233	234	236	239	240	242	243	245	246	247	248	251	254	264	268	269	270	271	272	273	274
R1515	205	206	207	209	210	211	212	213	214	219	220	221	222	223	224	225	232	234	238	239	241	243	245	247
R1516	208	209	210	211	212	213	214	217	219	220	221	222	223	225	226	227	228	229	232	233	234	235	240	241
R1517	230	231	233	235	238	239	243	245	249	250	255	256	258	259	260	261	263	264	267	270	273	275	277	281
R1518	222	223	224	225	226	227	230	231	232	235	237	238	239	240	241	242	248	249	251	253	256	258	259	263
R1519	204	205	206	207	208	209	210	211	212	213	214	215	216	217	219	221	224	226	227	232	233	234	236	237
R1520	197	200	201	203	204	206	207	208	209	210	211	212	213	214	219	220	222	223	224	227	231	237	238	239
R1521	227	229	230	231	232	233	234	240	241	246	249	251	255	256	257	258	260	261	262	263	265	266	267	268
R1522	206	207	208	209	210	211	212	213	214	215	217	218	219	222	223	226	227	229	235	238	240	242	245	246
R1523	224	225	227	229	230	233	234	237	238	239	242	243	244	249	250	251	252	255	256	257	258	259	262	264
R1524	237	238	242	245	246	249	251	253	255	257	261	262	267	272	274	275	276	278	279	283	284	285	286	287
R1525	201	202	204	205	206	207	208	209	210	211	212	213	216	219	220	221	227	229	231	233	234	235	236	237
R1526	219	220	221	222	223	225	226	227	231	232	233	235	236	241	243	244	246	248	249	251	256	258	259	265
R1527	270	275	279	280	286	287	290	291	293	299	305	308	309	318	320	321	322	323	324					
R1528	191	197	198	199	200	201	203	204	209	214	216	218	220	221	224	225	228	230	233	234	236	238	241	243
R1529	211	212	213	214	215	217	219	220	222	223	226	227	228	230	232	235	236	237	239	240	242	243	244	246
R1530	204	205	206	207	209	210	211	212	213	215	216	219	220	222	224	225	226	227	231	235	238	240	248	249
R1531	213	214	215	219	220	221	222	224	227	229	230	231	243	246	249	252	254	256	257	258	260	262	263	265
R1532	207	209	210	211	212	213	217	219	220	222	223	226	227	233	238	240	243	246	248	250	251	252	254	255
R1533	206	207	208	209	210	211	212	214	216	220	221	222	227	230	231	232	233	234	235	240	241	243	249	251
R1534	196	197	198	200	201	202	203	204	205	206	209	210	211	212	213	214	216	217	219	222	223	224	227	229
R1535	185	186	190	192	193	196	199	203	208	217	224	229	231	233	234	235	237	238	240	242	243	244	245	249
R1536	229	230	231	233	241	243	248	251	252	254	260	261	263	264	271	274	277	278	279	280	281	283	284	285
R1537	212	214	215	216	219	220	221	222	223	225	226	227	230	231	233	234	235	236	238	240	243	244	247	250
R1538	254	259	260	261	263	268	269	271	273	277	279	281	284	285	286	288	289	291	293	296	297	299	304	306
R1539	244	245	246	248	250	251	252	253	255	257	259	262	263	265	266	271	273	275	279	280	282	289	290	294
R1540	241	242	245	246	253	254	259	263	264	265	266	271	272	273	274	275	276	277	278	280	282	283	289	294
R1541	216	217	223	224	225	232	233	236	238	239	240	242	243	244	246	247	249	251	252	253	257	258	262	263
R1542	208	209	210	211	212	213	214	217	219	220	221	222	225	227	229	230	235	238	240	247	249	251	255	256
R1543	222	225	226	227	231	233	234	236	238	239	243	244	247	250	254	255	259	260	261	264	265	266	268	272
R1544	219	220	221	222	223	224	226	227	235	238	243	245	248	252	253	257	259	261	262	263	264	265	267	268
R1545	210	211	212	213	214	215	216	217	219	222	223	225	227	229	232	233	235	236	238	239	240	241	244	245
R1546	243	244	245	246	248	249	253	256	258	260	262	263	264	270	271	273	275	277	280	281	283	284	285	288
R1547	214	215	217	220	221	222	224	227	229	230	236	238	240	242	243	244	245	249	250	251	252	253	254	255
R1548	235	238	243	244	245	248	250	253	254	257	260	262	263	264	265	266	268	269	271	272	274	275	276	278
R1549	232	233	234	235	238	241	243	244	245	246	247	250	253	255	256	257	258	260	263	265	266	267	271	272
R1550	210	211	212	214	215	216	217	220	222	223	224	227	230	232	238	241	246	249	256	257	258	259	262	263
R1551	224	225	226	227	229	230	231	232	233	235	236	239	240	241	243	246	247	249	251	252	256	257	258	261
R1552	235	239	243	245	249	252	253	255	256	257	258	261	262	266	267	277	282	283	284	286	288	289	292	293
R1553	220	223	225	229	238	239	240	241	243	245	246	248	249	257	259	262	266	271	272	274	275	276	277	278
R1554	223	224	231	232	233	235	238	239	241	243	246	247	251	252	253	255	256	258	259	261	264	267	268	269
R1555	216	223	226	229	232	234	238	241	245	249	252	254	257	262	263	265	266	267	268	269	272	274	275	276
R1556	211	212	216	217	220	221	222	223	226	227	229	233	234	236	238	240	245	247	248	254	255	257	260	261
R1557	206	207	208	209	210	211	212	213	214	217	220	221	222	224	225	226	227	230	232	238	239	240	241	242
R1558	258	261	262	265	266	267	268	269	273	275	277	280	282	285	287	290	292	293	295	298	299	301	302	305
R1559	204	206	207	208	210	211	212	217	218	219	222	227	230	234	238	243	244	245	249	250	253	256	257	258
R1560	208	209	210	211	212	213	214	216	217	219	223	225	227	229	230	232	234	235	237	241	242	244	245	247

Copyright © 2005 IEEE. All rights reserved.
This is an unapproved draft, subject to change

Table 55A–2—P matrix: location 25 to 48

	C25	C26	C27	C28	C29	C30	C31	C32	C33	C34	C35	C36	C37	C38	C39	C40	C41	C42	C43	C44	C45	C46	C47	C48
R1561	215	219	221	222	224	226	232	233	235	236	237	241	242	245	247	248	250	252	257	259	263	265	266	267
R1562	234	236	240	244	245	246	248	251	253	255	257	261	264	267	270	272	274	275	276	278	281	283	284	285
R1563	210	211	212	213	215	217	220	221	222	223	224	225	226	227	234	235	236	239	244	246	247	248	251	253
R1564	237	239	240	241	243	252	257	260	262	265	267	268	269	270	272	273	274	276	277	278	279	280	283	285
R1565	202	204	205	206	207	209	210	211	212	217	218	219	222	223	224	225	227	233	235	238	242	243	244	249
R1566	209	210	211	212	213	214	216	219	220	221	222	224	225	226	227	229	231	234	236	240	242	243	244	247
R1567	226	229	230	231	233	237	238	241	242	243	248	251	252	254	257	260	261	262	264	267	270	271	273	280
R1568	224	229	233	234	236	244	245	246	247	248	250	251	263	264	267	277	280	282	284	289	290	292	295	296
R1569	236	239	240	242	245	248	253	256	257	258	260	262	264	268	269	270	271	272	274	276	278	279	281	282
R1570																								
R1571	214	217	219	220	222	223	224	227	231	232	236	239	241	242	243	244	245	246	250	251	252	253	254	255
R1572	228	231	233	234	243	245	246	249	250	251	253	254	256	257	258	260	262	263	265	266	267	268	269	271
R1573	236	237	238	240	243	244	247	248	250	251	252	253	255	257	259	260	261	262	263	268	269	270	271	273
R1574	222	224	225	226	227	228	229	231	232	233	241	242	246	249	251	253	254	256	257	258	260	261	262	263
R1575	227	230	232	233	236	237	239	241	242	246	247	251	252	255	259	260	261	263	264	266	268	269	270	277
R1576	205	208	215	216	220	228	229	230	231	233	234	236	238	243	247	248	249	253	256	258	260	261	263	264
R1577	208	213	215	216	217	220	221	224	229	230	231	232	233	234	235	236	238	239	241	243	247	253	255	257
R1578	240	241	244	246	247	249	250	251	253	254	257	259	262	264	267	268	269	272	274	276	277	278	279	281
R1579	206	209	210	212	214	215	217	219	220	222	223	225	226	227	230	232	234	235	236	240	241	249	253	255
R1580	201	204	206	207	209	210	211	212	213	215	217	218	220	221	222	224	225	226	227	230	231	233	235	236
R1581	194	195	198	202	203	205	207	216	220	223	224	225	229	230	231	234	235	238	240	243	244	248	249	250
R1582	211	212	213	214	215	216	217	219	220	221	222	225	227	229	230	231	233	235	236	237	238	242	243	246
R1583	228	229	234	235	238	239	244	249	250	254	255	256	257	258	260	269	270	271	272	274	275	276	278	280
R1584	229	230	231	234	242	244	248	249	254	256	258	260	261	262	267	268	269	271	273	275	280	283	284	286
R1585																								
R1586	243	246	247	249	250	251	253	254	255	256	257	258	259	260	261	262	264	270	273	274	275	277	278	279
R1587	210	211	212	213	215	217	219	220	222	225	226	227	229	230	231	232	233	236	238	240	241	246	249	250
R1588	221	222	224	230	231	233	234	235	237	238	239	240	244	245	246	249	250	251	252	253	254	259	260	264
R1589	230	231	239	240	243	245	246	247	249	251	252	253	256	257	258	259	260	261	262	263	264	265	266	268
R1590	247	248	251	254	261	264	267	270	272	274	276	278	280	281	283	291	292	293	294	295	296	297	298	302
R1591	209	210	211	212	213	214	215	217	219	220	224	227	229	230	233	237	238	240	242	245	247	249	250	252
R1592	239	240	242	243	244	245	249	253	256	257	258	260	264	266	268	269	270	271	273	277	281	282	283	284
R1593	194	195	196	198	199	202	205	207	213	215	216	217	218	219	220	221	223	224	227	229	230	232	234	235
R1594	201	204	205	206	207	208	209	210	211	212	213	214	217	219	221	222	223	227	233	234	235	236	238	242
R1595	189	194	199	208	214	215	216	222	223	225	226	229	233	235	236	237	240	242	243	247	248	249	252	255
R1596	212	213	219	220	222	223	224	225	227	228	229	233	236	238	243	244	246	250	251	252	253	255	257	259
R1597	211	212	213	214	216	217	219	220	221	222	225	227	232	233	235	236	238	241	244	246	248	249	250	251
R1598	210	211	212	213	214	216	219	220	223	224	225	226	227	229	230	231	233	234	237	239	240	242	243	244
R1599	237	239	240	245	249	252	253	254	256	258	261	263	264	271	273	275	279	280	282	283	285	287	288	290
R1600	197	199	200	201	204	206	207	209	210	211	212	213	214	217	219	220	221	222	225	227	230	232	234	235
R1601	244	247	248	250	251	252	254	257	259	260	261	263	265	268	269	272	273	274	276	278	279	281	285	287
R1602	213	214	219	222	223	225	226	227	231	232	233	234	235	238	239	240	241	243	245	246	247	248	251	254
R1603	244	245	247	249	250	251	252	253	254	255	256	258	263	265	266	268	269	271	275	279	280	281	282	283
R1604	248	249	250	253	255	256	258	259	260	261	264	265	267	271	275	278	280	281	282	283	284	286	288	289
R1605	209	210	211	212	213	215	216	217	219	220	224	227	228	229	235	237	238	239	241	242	244	246	247	253
R1606	201	203	205	206	207	210	211	212	213	216	219	220	222	223	224	227	228	230	233	234	235	236	239	240
R1607	211	212	214	215	216	219	220	222	223	224	225	227	229	231	233	237	238	242	245	246	248	249	251	252
R1608	226	231	233	235	238	239	240	243	246	247	248	250	251	254	259	261	265	266	267	272	273	274	276	278
R1609	210	211	212	213	217	219	221	222	225	226	227	229	230	232	234	240	241	242	243	246	247	249	251	252
R1610	248	251	253	254	257	262	263	264	270	271	273	275	277	279	280	281	285	287	288	290	294	299	300	301
R1611	207	208	209	210	211	212	213	214	217	219	220	222	223	224	227	229	232	234	238	241	244	246	247	250
R1612	190	192	193	194	195	197	198	199	200	201	202	204	205	206	209	210	211	212	214	217	219	220	221	222
R1613	239	240	243	245	247	248	249	251	252	253	256	257	258	260	262	264	266	268	269	270	271	272	274	276
R1614	225	226	230	232	233	234	235	239	240	241	245	247	248	253	259	260	263	266	267	271	272	273	274	276
R1615	212	213	214	216	220	222	223	224	225	226	227	229	230	231	233	234	242	244	245	246	247	248	249	250
R1616	245	250	252	257	259	260	263	267	270	271	272	273	274	276	277	278	281	283	284	286	288	293	294	295
R1617	241	242	243	249	250	251	252	257	258	260	262	263	265	267	271	272	274	275	276	278	280	281	282	283
R1618	193	195	197	200	201	203	204	206	207	209	210	211	212	217	219	220	221	226	227	230	237	238	240	244
R1619	211	212	213	214	216	219	220	221	222	223	225	227	230	231	233	235	236	242	245	246	247	248	253	257
R1620	221	222	223	225	227	231	232	233	234	239	240	241	245	249	251	256	258	259	261	263	264	265	266	268

Copyright © 2005 IEEE. All rights reserved.
This is an unapproved draft, subject to change

Table 55A–2—P matrix: location 25 to 48

	C25	C26	C27	C28	C29	C30	C31	C32	C33	C34	C35	C36	C37	C38	C39	C40	C41	C42	C43	C44	C45	C46	C47	C48
R1621	243	244	245	246	247	248	250	251	252	253	254	255	256	257	258	259	261	262	267	273	279	281	283	284
R1622	196	197	201	204	205	206	208	210	212	217	220	221	222	224	225	228	229	231	232	234	235	239	241	242
R1623	215	216	218	220	221	222	223	224	227	230	231	232	236	240	243	248	249	252	254	256	258	259	260	261
R1624	233	234	239	241	244	246	247	249	250	251	254	255	256	257	258	259	261	262	264	266	268	271	273	277
R1625	233	234	235	236	241	243	245	247	251	257	259	261	262	263	264	265	267	271	273	277	279	280	282	284
R1626	193	196	197	200	201	203	206	207	210	211	212	219	220	221	222	226	227	230	232	239	240	241	245	246
R1627	205	213	218	220	222	223	224	225	229	230	232	233	235	237	238	239	241	251	252	253	254	255	259	263
R1628	221	223	230	231	232	233	234	235	237	239	241	242	243	244	245	247	248	249	250	251	252	254	255	256
R1629	196	200	208	209	214	215	216	219	225	229	230	234	235	236	237	240	242	243	244	245	246	247	248	252
R1630	216	217	224	226	229	230	231	234	236	240	243	244	247	248	249	252	253	255	256	257	258	260	261	262
R1631	206	207	208	209	210	211	212	213	219	220	222	223	227	229	231	232	235	238	239	240	241	242	243	246
R1632	206	207	209	210	211	212	213	214	215	219	220	222	223	224	225	227	234	236	238	239	240	242	244	245
R1633	214	215	217	219	223	224	226	231	232	233	234	236	237	239	240	241	242	244	246	248	249	250	252	253
R1634	210	211	212	213	214	217	219	220	222	223	225	227	229	232	233	235	236	238	240	243	244	245	247	253
R1635	244	245	248	249	250	251	255	256	257	258	259	260	263	265	271	273	277	279	281	283	284	286	288	291
R1636	243	246	252	254	259	260	264	265	266	268	269	270	272	273	274	276	277	278	280	281	282	283	287	297
R1637	216	217	219	220	222	224	225	226	229	232	233	235	236	240	241	243	244	250	251	252	253	255	257	259
R1638	232	234	235	236	239	240	241	244	246	247	248	250	253	259	261	263	266	267	271	275	277	279	280	281
R1639	257	258	260	262	265	266	273	277	285	287	290	295	297	301	302	303	305	308	313	314	315	316	318	321
R1640	207	208	210	211	212	214	216	219	220	221	223	225	227	229	230	231	232	235	236	237	239	240	241	242
R1641	201	202	204	205	206	207	209	210	211	212	213	214	215	216	217	219	221	222	223	227	230	233	234	235
R1642	249	251	255	256	257	260	261	262	263	264	265	266	268	269	275	277	278	280	281	283	286	287	290	297
R1643	211	212	213	216	217	220	222	223	224	225	226	227	228	235	236	239	243	245	247	248	252	253	255	259
R1644	216	217	219	220	221	222	223	224	225	226	227	229	230	232	234	235	237	238	239	240	241	245	246	251
R1645	224	226	231	235	238	239	242	249	253	257	260	261	262	263	265	267	268	269	270	271	273	275	277	281
R1646	219	221	223	225	226	229	231	234	235	239	240	241	248	252	257	259	260	261	262	265	266	267	268	271
R1647	323	324	325																					
R1648	206	207	209	210	211	212	213	214	217	219	222	225	226	227	230	232	235	239	241	245	247	248	251	252
R1649	231	232	234	236	238	240	241	244	246	248	250	252	253	255	262	264	267	268	269	272	273	274	275	276
R1650	205	206	207	208	209	210	211	212	218	219	224	226	227	229	230	231	232	234	235	236	237	239	241	243
R1651	210	211	212	213	214	216	217	219	220	222	223	224	225	228	229	230	231	234	239	240	244	249	250	253
R1652	204	206	207	209	210	211	212	213	215	217	219	220	222	225	227	229	230	236	238	239	245	248	249	252
R1653	204	206	207	209	210	211	212	213	214	215	216	220	221	222	224	227	230	231	237	239	240	242	243	244
R1654	200	201	204	205	206	210	211	212	214	215	217	219	221	222	223	226	227	228	230	232	234	236	238	241
R1655	219	220	221	222	223	224	226	227	229	230	232	235	238	241	242	243	244	247	249	251	254	256	258	260
R1656	220	221	222	225	226	227	233	234	236	238	239	243	244	247	250	251	252	254	255	260	261	268	270	275
R1657	200	201	202	203	204	205	206	207	209	210	211	212	213	215	217	219	220	222	223	224	227	229	232	235
R1658	204	205	209	213	216	217	218	219	223	224	226	227	228	229	232	234	236	238	240	241	246	247	249	252
R1659	239	243	244	246	248	249	250	251	252	254	255	256	257	258	265	266	267	268	269	271	272	274	275	276
R1660	236	237	241	242	243	244	246	248	249	250	251	254	259	261	263	265	266	268	269	270	272	273	274	275
R1661	205	206	209	210	212	214	215	217	219	222	224	225	227	228	231	232	234	238	239	240	241	243	244	245
R1662	229	230	231	232	233	235	236	239	240	241	242	244	245	246	247	248	250	252	253	254	255	256	258	260
R1663	260	262	263	265	268	269	271	279	281	283	284	286	288	290	291	292	295	298	299	300	303	305	307	311
R1664	197	198	200	201	202	204	205	206	207	208	209	210	211	212	213	214	215	217	219	222	223	224	225	226
R1665	245	246	247	248	249	252	253	254	255	256	257	258	259	262	263	265	266	271	272	273	274	275	276	278
R1666	234	239	240	241	242	243	244	246	247	248	250	252	253	259	260	263	268	269	275	280	281	282	285	286
R1667	188	190	193	194	203	205	208	209	210	212	214	218	220	221	223	224	225	226	227	228	229	230	231	234
R1668	216	222	224	225	229	230	233	236	237	239	242	243	244	245	247	250	252	254	255	259	264	265	268	269
R1669	211	213	214	215	216	217	219	220	224	228	231	232	233	237	239	241	242	243	246	248	249	251	253	255
R1670	211	212	213	214	216	217	219	220	222	223	225	226	228	230	231	233	235	245	246	247	248	249	252	253
R1671	246	248	249	253	257	260	262	263	264	265	268	269	271	285	286	287	288	289	290	293	294	298	300	301
R1672	206	207	210	211	212	213	215	217	219	220	221	222	223	224	227	229	235	240	242	243	245	247	249	251
R1673	194	198	202	203	205	208	214	221	226	232	233	234	236	238	241	243	246	250	251	252	254	260	261	263
R1674	268	272	273	274	276	278	280	281	283	284	286	289	290	291	292	293	294	295	296	297	298	299	300	302
R1675	201	203	204	205	206	207	208	209	210	211	212	213	214	216	217	219	221	223	224	225	226	227	230	232
R1676	226	230	232	233	238	239	240	241	242	243	244	247	249	250	251	254	256	258	260	261	264	268	269	272
R1677	259	263	268	269	270	271	272	274	275	276	277	278	279	280	281	282	283	284	289	290	292	294	295	296
R1678	246	248	249	252	254	256	258	259	261	269	272	273	274	276	277	278	279	280	281	282	286	287	288	291
R1679	224	228	230	234	235	236	238	239	241	243	245	246	247	252	255	258	260	263	265	270	271	277	285	286
R1680	236	238	239	240	241	245	246	248	249	251	252	253	256	257	258	259	265	266	270	271	275	277	280	282

Copyright © 2005 IEEE. All rights reserved.
This is an unapproved draft, subject to change

Table 55A–2—P matrix: location 25 to 48

	C25	C26	C27	C28	C29	C30	C31	C32	C33	C34	C35	C36	C37	C38	C39	C40	C41	C42	C43	C44	C45	C46	C47	C48
R1681	212	213	214	219	220	222	223	225	227	229	235	238	239	240	243	245	247	248	252	254	256	257	258	261
R1682	224	225	229	231	234	235	243	244	245	248	249	250	251	252	256	258	261	263	264	265	266	267	270	272
R1683	243	247	248	252	253	254	255	260	263	264	265	267	270	271	273	275	279	280	282	291	292	294	298	299
R1684	217	220	223	225	226	229	232	238	240	241	244	246	247	248	249	250	251	253	254	256	258	259	260	261
R1685	210	211	212	217	219	221	222	223	226	227	238	239	241	243	244	246	249	250	251	254	255	256	257	258
R1686	216	222	223	230	234	236	237	238	242	244	245	246	248	250	251	252	253	259	260	263	265	266	270	272
R1687	245	249	253	255	258	263	267	268	269	270	271	272	273	274	275	276	277	278	279	280	282	283	284	285
R1688	198	199	200	201	204	206	207	209	210	211	212	213	214	219	220	222	223	226	227	229	233	235	238	240
R1689	212	213	214	216	217	219	220	222	223	225	226	227	228	230	243	246	248	249	252	256	258	262	267	268
R1690	207	209	210	211	212	213	217	221	222	223	224	227	228	229	231	233	235	236	238	239	241	243	244	245
R1691	216	219	226	232	235	236	240	241	245	246	247	252	254	255	257	259	260	262	264	271	275	278	279	280
R1692	257	260	261	262	264	266	267	268	269	272	273	274	276	277	278	279	281	283	284	288	289	291	292	293
R1693	225	226	227	229	231	233	234	236	238	241	242	245	246	247	248	249	251	253	256	258	260	261	264	265
R1694	211	212	213	214	215	216	217	220	221	222	223	224	225	227	230	234	236	240	244	246	248	254	255	260
R1695	198	199	200	201	202	203	204	206	207	209	210	211	212	214	217	219	220	221	222	224	225	227	228	230
R1696	232	233	234	235	238	240	241	245	251	252	253	255	256	257	258	262	263	267	271	272	274	275	276	277
R1697	234	236	237	238	241	242	244	246	247	248	250	251	253	259	260	261	262	263	265	267	268	269	270	273
R1698	265	270	272	273	274	275	276	278	280	281	283	284	286	289	292	293	294	296	298	301	302	304	305	306
R1699	187	188	190	191	193	195	196	198	199	202	216	221	222	223	225	226	231	232	233	234	236	238	239	240
R1700	207	209	210	211	212	213	216	217	219	220	221	222	223	226	227	229	230	232	233	234	237	238	239	240
R1701	220	222	224	225	227	230	232	233	236	238	239	240	241	244	246	247	248	249	252	256	257	258	262	263
R1702	214	217	220	222	223	227	235	238	240	242	243	244	245	246	248	249	250	251	254	255	256	257	258	259
R1703	233	236	237	241	242	247	248	254	257	262	264	265	267	268	270	271	272	273	274	275	276	278	280	282
R1704	254	257	258	261	262	263	267	268	269	271	272	274	276	278	280	283	284	285	287	292	293	294	296	297
R1705	221	224	229	231	234	235	236	237	238	239	240	242	243	246	247	248	249	251	252	257	258	259	260	261
R1706	204	205	206	209	210	211	212	213	217	219	220	221	226	227	229	233	237	238	239	240	242	244	245	246
R1707	194	195	200	207	208	216	217	219	221	223	227	230	231	238	239	240	242	243	244	245	249	250	251	252
R1708	212	214	216	217	219	220	222	223	225	226	227	229	230	233	235	236	240	243	244	245	248	250	252	255
R1709	200	202	203	207	208	219	224	226	229	233	234	235	245	247	248	250	251	253	254	258	259	260	261	263
R1710	219	221	223	225	226	228	230	234	235	236	239	242	247	250	252	253	254	257	262	263	265	266	267	270
R1711	206	207	209	210	211	212	213	217	219	220	221	222	227	230	232	234	236	238	239	240	243	244	247	249
R1712	236	238	241	244	247	250	252	257	258	259	261	262	263	264	265	267	268	269	270	275	277	280	281	282
R1713	243	244	245	246	247	249	250	252	253	254	256	257	258	259	262	264	267	270	271	272	274	275	276	278
R1714	236	237	238	239	240	241	242	244	246	250	254	255	257	262	265	266	267	268	269	270	273	277	280	281
R1715	198	200	201	202	203	204	205	206	207	208	209	210	211	212	213	214	216	217	219	222	223	224	225	226
R1716	205	206	207	208	209	210	211	212	213	214	215	216	217	218	222	223	224	227	229	230	233	236	242	243
R1717	237	238	239	240	241	243	245	247	248	249	250	251	252	253	256	257	258	261	263	264	267	268	269	272
R1718	232	233	235	238	239	241	244	245	248	250	251	252	254	259	261	263	265	266	267	271	272	274	276	277
R1719	206	207	209	210	211	212	214	219	220	221	222	227	230	231	235	236	238	239	240	242	244	247	249	251
R1720	212	213	214	217	219	220	222	224	225	226	227	230	233	236	238	242	243	245	246	248	251	252	256	257
R1721	221	229	230	231	234	235	236	238	239	240	244	246	247	252	253	254	257	262	265	266	267	268	269	271
R1722	220	221	224	225	227	230	233	234	235	237	239	240	243	244	246	247	248	251	261	264	268	270	272	273
R1723	194	198	202	205	215	216	224	225	226	229	230	231	233	234	235	239	240	242	243	246	248	250	257	261

Copyright © 2005 IEEE. All rights reserved.
This is an unapproved draft, subject to change

Table 55A–3—P matrix: location 49 to 72

	C49	C50	C51	C52	C53	C54	C55	C56	C57	C58	C59	C60	C61	C62	C63	C64	C65	C66	C67	C68	C69	C70	C71	C72
R1	273	275	277	282	285	286	287	288	290	292	293	295	296	297	298	299	303	305	309	311	312	314	316	319
R2	287	289	290	294	296	297	299	302	304	306	308	310	311	312	314	321	325							
R3	267	269	271	272	274	275	276	278	279	280	281	283	289	292	293	297	299	300	301	303	305	308	314	315
R4	268	269	270	271	277	281	282	283	284	285	286	287	288	290	293	294	297	301	305	308	311	316	317	318
R5	273	274	276	277	278	279	282	283	285	286	289	297	298	302	303	305	306	312	316	317	318	319	320	323
R6	270	279	281	283	285	286	287	288	291	296	297	298	299	302	304	307	309	310	312	313	314	315	316	317
R7	284	285	287	288	291	292	294	295	297	298	299	301	304	308	310	313	315	316	317	318	319	320	324	
R8	259	260	261	262	263	264	267	268	269	270	271	273	275	277	279	282	284	285	290	291	292	296	298	299
R9	242	244	245	250	251	253	263	265	266	269	270	272	274	276	277	278	279	280	281	284	285	287	288	290
R10	253	255	257	261	265	266	267	269	270	271	280	281	282	283	286	288	289	290	291	292	293	298	299	300
R11	277	278	280	283	287	288	290	292	293	294	295	297	298	299	301	302	303	306	309	311	313	314	315	317
R12	282	285	287	290	292	295	298	302	303	304	305	306	307	308	309	310	312	313	314	315	316	317	320	321
R13	269	271	273	279	280	281	283	288	289	290	294	295	296	297	298	299	300	301	303	306	307	309	311	313
R14	299	300	304	305	307	310	311	312	313	314	315	317	318	319	320	323	325							
R15	237	238	240	241	242	243	245	246	248	249	250	251	252	253	255	256	257	258	259	268	270	273	275	277
R16	291	293	295	299	300	302	304	305	307	312	313	315	316	317	318	321	322	323	324					
R17	271	273	279	280	287	289	290	291	292	294	296	297	298	299	300	302	303	304	306	309	311	312	314	315
R18	297	299	300	302	304	305	306	307	313	316	317	319	322	324	325									
R19	256	258	265	266	267	268	270	271	275	281	284	285	286	287	289	290	291	292	293	294	296	303	304	305
R20	248	253	256	257	258	259	260	261	262	263	264	266	271	272	274	275	276	280	282	283	285	287	288	290
R21	274	276	278	283	285	286	287	289	290	291	292	293	294	296	299	300	304	306	309	311	312	314	317	320
R22	289	290	294	295	298	299	304	307	309	311	312	314	319	321	322	323	325							
R23	274	276	278	279	282	284	285	287	289	290	292	293	294	300	301	302	303	306	307	315	318	319	320	321
R24	244	245	250	252	253	254	256	258	259	261	263	265	267	268	277	280	284	285	286	287	289	291	292	294
R25	263	264	267	268	269	270	272	273	274	276	278	280	281	283	284	285	286	291	292	293	297	298	300	302
R26	257	259	261	262	268	271	272	274	275	276	277	278	279	280	281	282	287	288	290	291	293	294	295	297
R27	271	273	275	277	284	285	287	288	289	296	298	299	311	312	314	316	317	320	323					
R28	240	243	246	248	250	251	252	253	256	257	258	262	264	265	267	270	275	277	285	287	288	289	290	291
R29	242	244	249	250	252	253	254	256	257	258	261	265	266	268	269	270	272	274	276	278	280	283	284	285
R30	294	297	299	300	306	307	308	310	311	312	316	317	318	319	322									
R31	288	290	296	297	300	302	303	305	306	307	312	313	314	324	325									
R32	289	293	294	297	298	299	300	301	302	303	304	306	310	311	314	315	316	317	321	322	323	324	325	
R33	323	324	325																					
R34	276	278	281	282	283	284	285	287	289	292	293	294	295	296	297	298	299	300	302	303	305	306	307	309
R35	253	254	255	256	258	260	265	269	270	272	274	275	276	277	278	279	281	282	283	285	287	291	297	298
R36	257	258	266	269	272	273	274	275	276	277	278	280	283	284	285	286	290	291	292	294	295	299	307	308
R37	265	267	270	271	277	279	281	283	286	287	290	293	294	295	296	297	300	302	303	304	305	307	309	310
R38	243	248	251	254	255	263	264	266	267	268	271	272	273	274	275	276	277	278	281	284	289	291	292	297
R39	249	254	256	258	259	260	261	265	267	268	269	270	273	279	281	282	284	285	287	288	290	291	295	296
R40	313	315	316	317	318	320	322	324	325															
R41	257	260	262	263	264	267	268	270	271	275	281	282	283	287	289	291	292	294	295	296	297	298	299	301
R42	222	223	227	229	233	238	242	244	245	246	248	250	251	256	257	258	261	262	264	266	268	272	273	274
R43	297	299	302	303	304	305	306	309	310	311	314	315	316	317	319	320	322	323	324					
R44	258	262	264	265	266	267	269	272	274	275	276	277	278	279	280	281	283	286	287	289	290	292	296	301
R45	263	268	269	273	275	283	284	286	287	289	290	296	300	304	305	306	310	311	313	314	315	319	321	322
R46	286	287	289	292	295	296	297	298	299	300	301	302	306	308	309	310	312	316	322	324	325			
R47	311	312	313	315	317	318	320	324	325															
R48	273	277	279	281	287	291	292	293	295	297	300	301	303	304	305	306	307	308	311	312	313	314	316	317
R49	264	265	271	272	274	275	276	278	281	282	283	287	290	291	292	293	294	295	297	298	299	302	303	305
R50	283	285	288	290	292	294	295	297	298	299	300	302	307	309	310	311	313	316	317	319	320	321	322	323
R51	281	286	290	293	294	295	296	299	300	301	302	303	304	308	309	310	311	312	318	319	320	321	323	
R52	273	274	277	279	280	281	282	284	285	286	287	289	290	291	292	298	302	307	308	309	312	313	315	316
R53	291	293	295	297	299	302	303	304	305	306	308	310	315	318	320									
R54	255	259	263	267	268	270	271	272	274	276	277	278	279	280	283	287	290	291	292	294	295	296	299	301
R55	271	273	277	283	286	287	288	292	293	294	295	297	299	300	301	302	303	305	309	310	312	313	315	318
R56	306	308	309	312	315	318	324																	
R57	256	257	258	259	260	261	262	264	267	268	270	277	279	280	284	288	289	290	292	293	296	297	300	301
R58	257	262	263	264	265	267	269	277	285	288	290	292	296	297	298	301	302	304	307	311	313	314	316	317
R59																								
R60	267	269	270	271	272	273	274	275	276	277	278	279	281	284	288	290	293	295	296	297	302	303	306	308

Copyright © 2005 IEEE. All rights reserved.
This is an unapproved draft, subject to change

Table 55A–3—P matrix: location 49 to 72

	C49	C50	C51	C52	C53	C54	C55	C56	C57	C58	C59	C60	C61	C62	C63	C64	C65	C66	C67	C68	C69	C70	C71	C72
R61	242	243	245	246	247	251	253	254	256	257	258	260	262	267	269	271	272	273	274	276	278	279	282	283
R62	282	286	289	290	291	292	293	298	304	305	306	310	315	322	323									
R63	283	284	285	286	288	289	290	291	296	300	304	307	309	310	312	313	317	319	322	324	325			
R64	266	267	269	270	271	272	273	274	275	276	277	278	285	286	288	289	291	294	297	300	302	303	305	306
R65	265	266	268	271	273	275	280	281	282	284	289	295	298	299	301	302	306	307	308	309	310	323	324	
R66	251	252	253	255	259	260	261	264	265	266	269	271	277	279	281	282	283	286	287	289	291	293	294	295
R67	240	244	246	247	249	250	251	256	258	259	260	261	262	264	266	268	270	273	279	284	287	289	292	295
R68	279	283	286	288	289	290	291	292	293	294	295	300	301	303	306	307	308	312	313	315	320	321	323	324
R69	279	281	283	284	285	286	288	290	293	294	295	297	303	304	305	307	308	309	310	311	314	316	318	320
R70	260	263	264	265	266	267	268	269	271	272	274	275	276	277	278	280	282	287	288	293	295	296	298	299
R71	260	261	262	263	267	269	271	273	277	279	281	287	291	294	296	299	303	304	305	309	310	311	312	313
R72																								
R73	276	278	282	285	286	287	288	291	292	293	296	298	300	301	302	303	304	305	306	308	309	310	314	316
R74	254	255	256	264	265	266	270	271	275	277	279	282	283	288	291	294	295	296	300	305	306	307	308	310
R75																								
R76	275	276	277	278	280	283	285	287	289	292	293	294	300	304	310	311	312	314	316	317	318	320	323	
R77	283	286	289	290	293	294	295	297	299	301	302	303	304	305	307	308	309	310	311	312	316	321	323	324
R78	244	246	247	248	250	257	259	262	265	266	268	270	273	275	279	281	283	288	289	292	293	297	299	300
R79	225	226	227	229	232	233	235	236	238	239	240	241	252	253	255	257	260	262	267	268	270	271	275	277
R80	268	269	272	273	274	275	276	277	278	285	286	287	288	290	292	295	296	297	299	302	303	311	313	315
R81	265	266	267	271	275	277	281	284	287	288	290	292	293	296	297	298	303	305	311	314	315	316	317	318
R82	253	254	255	256	261	264	269	272	274	276	277	278	280	281	282	283	286	294	295	296	297	300	301	303
R83	237	240	241	242	246	254	255	257	259	261	262	264	266	267	271	275	277	281	283	286	287	288	293	296
R84	222	223	224	227	229	230	231	232	233	234	236	237	238	239	241	242	246	249	251	252	253	255	257	259
R85	245	246	248	250	252	254	255	256	258	259	261	263	265	268	269	275	277	279	281	282	284	292	293	297
R86	277	278	280	285	288	292	293	294	295	296	301	302	309	312	319	321	322							
R87	266	267	270	272	273	274	275	276	277	278	279	280	281	283	285	287	288	293	294	295	296	297	298	299
R88	252	254	260	264	265	266	267	269	275	281	284	288	290	292	293	296	298	300	303	304	305	306	307	311
R89	258	259	262	266	267	268	270	275	277	279	280	282	285	286	287	291	293	295	298	301	304	307	310	311
R90	257	259	260	261	262	263	265	266	269	272	273	274	275	277	278	279	280	281	282	284	285	288	290	292
R91	265	266	267	268	269	270	271	273	279	280	284	285	289	290	291	292	293	295	296	297	298	299	300	301
R92	263	265	266	269	275	277	280	281	283	284	285	287	290	291	293	295	296	297	298	301	302	304	305	307
R93																								
R94	283	284	286	288	289	291	292	293	295	296	298	300	304	305	307	308	310	312	313	316	317	319	321	323
R95	248	249	250	251	252	254	256	258	263	264	265	268	269	273	275	279	281	282	284	285	286	287	289	293
R96	275	277	279	281	282	283	284	285	287	288	292	293	294	295	300	304	305	307	309	312	313	315	316	318
R97	282	283	284	285	289	294	295	296	297	300	302	303	305	306	307	309	312	313	315	319	325			
R98	255	259	260	261	265	266	267	269	273	280	281	283	288	289	291	292	293	296	297	298	299	302	303	304
R99	282	284	286	287	288	290	291	292	294	295	296	297	298	299	300	303	304	306	307	311	314	319	325	
R100	261	269	270	271	272	273	274	275	276	278	280	281	282	283	284	285	286	291	292	294	295	296	297	300
R101	265	267	268	269	270	275	277	281	282	283	284	285	286	287	290	297	298	299	300	301	302	305	307	313
R102	275	276	277	278	279	280	281	282	283	288	289	290	291	293	296	297	300	301	303	304	307	308	309	310
R103	256	258	260	264	268	270	271	273	275	277	279	281	284	289	293	295	297	298	301	302	303	304	305	306
R104	248	249	252	253	254	256	257	258	260	262	264	265	269	270	272	273	274	275	276	278	281	282	283	286
R105	263	264	267	268	272	273	274	276	277	278	284	285	286	287	288	290	291	292	293	295	296	297	300	301
R106	249	250	253	255	256	258	259	261	263	264	271	273	275	280	281	282	284	285	290	296	297	299	302	303
R107	266	267	268	269	271	272	274	276	277	278	279	280	283	292	294	296	298	300	301	305	307	308	311	313
R108	302	306	308	312	313	317	320	321	323															
R109	252	253	254	256	258	263	265	266	267	268	272	273	274	275	276	277	278	279	280	281	284	285	286	287
R110	277	278	279	280	281	282	283	287	288	291	292	293	294	295	298	301	302	303	304	305	307	312	313	315
R111	295	299	302	303	304	306	307	308	309	312	313	315	317	318	320	322	323							
R112	270	272	274	275	276	277	278	279	282	283	284	286	287	290	291	292	293	297	302	309	311	312	314	316
R113	293	295	297	298	299	300	301	306	312	313	314	315	316	320	322	323	324							
R114	259	260	261	262	263	265	266	267	268	269	271	272	274	275	276	277	278	279	286	290	291	292	293	294
R115	265	266	270	272	273	274	276	278	282	284	288	289	292	294	295	299	302	304	305	306	308	309	310	314
R116	300	303	306	309	312	313	315	317	320	321	322	323	324											
R117	211	212	213	214	215	216	217	220	221	222	223	225	226	230	231	232	234	235	236	237	239	241	244	245
R118	260	263	265	268	271	272	273	274	275	276	278	281	283	284	287	288	289	291	292	296	297	298	300	301
R119	260	261	263	267	271	275	277	279	282	283	284	286	288	290	292	294	296	299	302	304	308	310	311	312
R120	280	281	282	283	285	291	292	295	297	300	303	305	309	312	315	316	317	318	319	322	323			

Copyright © 2005 IEEE. All rights reserved.
This is an unapproved draft, subject to change

Table 55A–3—P matrix: location 49 to 72

	C49	C50	C51	C52	C53	C54	C55	C56	C57	C58	C59	C60	C61	C62	C63	C64	C65	C66	C67	C68	C69	C70	C71	C72
R121	253	256	258	260	264	265	266	268	272	274	275	276	277	278	281	282	283	284	285	286	287	289	292	295
R122	259	262	263	265	266	267	268	271	279	282	283	288	289	290	291	295	296	297	298	300	301	302	303	305
R123																								
R124	269	271	275	277	284	287	289	292	294	295	296	297	300	302	304	306	308	309	311	313	314	315	321	324
R125	251	252	253	255	256	259	260	263	264	267	272	274	275	276	277	278	280	281	282	284	286	291	293	294
R126	268	271	273	281	284	289	290	294	295	297	298	300	301	303	305	306	308	309	312	313	316	317	318	322
R127	259	260	261	262	263	265	269	272	274	275	276	278	279	280	281	282	283	287	288	289	290	296	298	299
R128	320	321	322	323	325																			
R129	299	300	301	302	303	306	307	308	314	316	317	321	322	323	324									
R130	247	252	253	255	257	260	261	262	263	266	267	268	272	274	276	277	278	279	283	286	289	292	294	295
R131	243	245	246	247	249	254	255	256	258	260	265	267	269	272	274	275	276	277	278	279	282	283	285	286
R132	276	277	278	279	280	281	282	285	286	287	288	290	292	296	298	299	301	312	313	317	318	319	323	
R133	244	245	248	252	253	254	255	257	259	260	261	262	264	267	269	272	273	274	275	276	278	281	284	285
R134	244	245	246	248	249	250	253	254	257	260	261	262	263	264	266	267	269	271	273	275	277	280	282	283
R135	277	279	280	281	282	285	289	291	295	297	299	300	303	304	305	307	308	310	311	312	314	317	318	321
R136	286	288	289	291	295	296	297	299	300	301	302	304	307	310	312	313	324							
R137	256	257	258	260	261	262	265	268	270	273	279	284	286	292	293	295	302	303	307	309	312	313	316	317
R138	252	254	259	260	264	265	266	267	268	269	270	271	275	277	282	285	286	288	289	291	294	296	299	300
R139	253	255	257	258	262	267	269	270	273	277	279	280	283	284	285	291	292	297	299	300	303	308	309	310
R140	276	285	288	292	295	296	297	299	300	301	302	303	307	309	311	314	316	318	321	323	325			
R141	265	268	270	271	272	274	276	278	279	280	284	285	287	288	289	290	291	292	294	298	307	308	309	311
R142	284	286	292	293	294	295	297	307	309	310	312	313	316	317	318	324	325							
R143	258	260	261	262	263	264	265	267	268	269	273	283	290	292	294	296	297	298	301	302	305	306	307	308
R144	258	259	260	261	265	266	268	270	272	274	276	278	280	281	282	283	284	285	286	287	289	291	292	296
R145	315	317	318																					
R146	303	305	308	309	312	313	315	316	317	321	322	323	325											
R147	294	296	300	302	303	307	311	315	320	323	325													
R148	279	280	281	284	285	293	294	295	296	297	298	301	303	308	309	316	318	319	320					
R149	250	252	253	254	255	257	261	262	263	264	266	267	268	269	271	275	282	284	285	286	290	295	296	297
R150	272	274	276	277	278	279	282	284	285	286	287	288	289	292	294	299	301	303	304	306	308	310	313	319
R151	296	299	300	304	306	307	308	310	312	313	315	316	318	319	322	323	325							
R152	285	287	288	289	290	293	296	297	299	300	301	303	306	307	308	311	312	314	315	316	317	318	319	320
R153	290	291	294	295	297	301	303	308	310	311	313	314	319	320	321	322	323	324	325					
R154	279	283	284	285	287	289	290	291	293	296	297	299	300	306	307	308	309	312	313	316	317	318	321	
R155	300	302	303	305	306	308	309	310	315	316	317	318	320	324	325									
R156	262	263	264	265	266	269	270	271	275	277	280	282	284	285	287	292	293	295	299	300	301	302	303	304
R157	285	286	287	290	291	292	294	295	296	298	299	300	301	302	303	304	307	310	312	314	315	317	318	319
R158	269	270	271	272	273	274	276	277	278	282	283	285	286	287	288	292	294	300	305	311	312	314	315	317
R159	294	295	296	298	301	304	305	307	308	310	312	316	318	320	325									
R160	271	273	275	281	283	284	285	286	287	288	289	291	292	293	296	297	298	300	301	304	309	310	315	320
R161	260	261	263	264	267	268	270	273	279	280	282	283	285	287	288	290	298	301	303	304	305	306	308	312
R162	229	230	233	234	237	242	244	245	246	250	252	259	263	264	265	266	268	270	273	277	279	283	284	287
R163	293	294	296	297	301	303	304	306	307	308	309	310	313	317	318	320	321	322	325					
R164	239	241	243	250	251	252	253	255	259	261	262	264	265	267	268	271	275	277	279	281	282	283	284	288
R165	256	257	258	259	260	263	265	266	268	271	273	277	279	283	287	288	289	291	299	302	304	306	307	308
R166	255	256	258	265	266	268	269	273	275	280	284	286	287	288	289	290	291	294	295	297	298	299	300	301
R167	265	266	268	269	270	273	275	278	279	280	283	286	288	290	291	292	294	297	302	303	304	305	306	308
R168	300	301	302	305	307	308	309	311	312	316	322	323	325											
R169	300	301	303	305	306	309	312	315	316	321	325													
R170	260	261	262	267	270	271	272	273	274	275	276	277	278	282	283	286	288	290	291	292	294	302	303	304
R171	246	251	252	253	254	258	260	265	266	268	273	275	277	279	281	282	283	284	285	288	290	291	292	293
R172	264	265	266	267	269	271	272	274	276	277	278	279	284	290	291	293	296	298	301	302	303	307	309	313
R173	261	263	265	266	268	269	272	273	274	275	276	277	278	280	281	284	286	287	292	293	297	302	303	304
R174	267	268	271	273	279	280	282	283	285	286	292	293	297	298	299	301	306	311	313	315	316	319	320	322
R175	269	270	272	273	274	276	278	279	281	283	285	286	287	289	292	293	296	297	302	303	304	311	312	314
R176																								
R177	285	288	290	293	296	299	300	302	303	304	305	307	310	312	314	315	317	321	322	323	325			
R178	263	264	265	266	267	270	271	272	273	274	275	276	278	279	281	282	285	286	288	289	290	293	295	296
R179	254	257	259	262	267	268	270	271	279	280	287	290	293	294	295	296	299	300	301	304	305	306	308	309
R180	254	257	260	262	264	265	266	268	271	272	274	276	278	280	282	285	286	289	291	295	298	300	302	304

Copyright © 2005 IEEE. All rights reserved.
This is an unapproved draft, subject to change

Table 55A–3—P matrix: location 49 to 72

	C49	C50	C51	C52	C53	C54	C55	C56	C57	C58	C59	C60	C61	C62	C63	C64	C65	C66	C67	C68	C69	C70	C71	C72
R181	234	235	237	238	239	241	243	244	246	250	251	252	255	257	259	260	262	264	265	267	269	270	273	283
R182	288	293	296	297	298	300	302	303	304	307	310	311	312	314	318	319	322							
R183	299	300	301	302	304	306	307	309	311	316	317	318	320	323	324									
R184	285	287	289	291	292	294	295	296	301	303	304	305	306	310	311	314	315	316	317	318	322	324	325	
R185	287	289	291	292	294	297	298	299	301	303	306	308	309	310	311	313	314	318	319	320	321	322	325	
R186	257	261	262	264	267	277	280	281	284	286	287	291	293	294	299	300	301	305	306	308	311	312	313	314
R187	249	252	253	254	255	256	258	264	268	271	272	274	275	276	277	278	279	281	283	286	288	292	296	297
R188	266	268	270	271	272	274	275	276	277	278	281	282	285	287	288	289	290	291	295	297	301	302	304	306
R189	301	303	304	305	306	308	310	313	314	315	317	318	319	322	324									
R190	227	231	232	233	234	237	238	240	241	242	244	246	247	248	249	250	251	253	255	258	260	261	263	264
R191	278	279	284	287	288	290	291	294	295	297	300	301	302	303	304	306	308	309	312	314	315	316	317	318
R192	245	246	248	251	255	257	258	259	260	261	262	265	266	267	269	270	272	274	276	277	278	282	284	285
R193	294	295	296	297	301	302	304	305	306	307	310	311	314	315	316	319	320	322	323					
R194	256	257	258	260	262	266	268	269	270	275	277	280	281	282	283	284	285	287	288	289	292	293	294	297
R195	228	229	230	233	235	236	237	239	242	244	249	250	252	254	255	256	257	258	261	262	265	266	268	270
R196	246	255	260	263	266	267	269	270	273	279	282	283	285	286	287	288	290	293	294	298	299	301	302	304
R197	291	292	293	295	296	302	303	306	307	308	310	311	312	314	315	317	318	320	322	324	325			
R198	263	265	266	267	268	270	272	273	274	275	276	278	279	280	281	283	289	290	291	294	298	299	300	301
R199	241	242	243	244	246	247	249	256	258	261	263	264	266	267	268	271	279	288	290	292	293	295	296	297
R200	277	278	279	282	284	286	287	290	295	296	299	300	303	304	306	307	308	309	311	314	316	318	322	
R201	263	269	271	275	280	281	283	284	285	286	288	289	293	295	296	297	298	300	301	304	306	307	308	309
R202	254	255	256	258	259	264	265	266	267	268	270	273	275	277	280	281	282	284	286	289	290	291	292	294
R203	239	240	241	244	245	246	249	250	252	253	256	257	258	260	265	266	268	271	272	273	274	276	278	280
R204	287	288	290	294	297	299	300	302	305	306	307	313	314	321	322									
R205	249	251	252	253	255	256	258	259	263	265	266	268	270	273	275	277	280	281	287	289	291	294	296	297
R206	240	241	242	244	246	248	250	252	254	259	260	261	263	268	272	273	274	275	276	278	281	282	284	285
R207	275	276	278	279	281	282	283	284	285	287	289	292	294	295	296	298	300	303	304	305	306	309	315	319
R208	268	269	270	272	274	275	276	277	278	279	282	283	285	286	287	290	291	292	294	295	296	297	298	299
R209	290	296	299	301	302	303	304	305	310	311	313	315	316	318	319	323	325							
R210	251	259	261	263	264	265	267	269	270	271	272	274	275	276	278	281	282	284	285	286	288	289	291	292
R211	305	306	309	312	314	317	318	319	321	324	325													
R212	291	292	299	301	309	310	311	313	315	318	319	321	322	323	324									
R213	274	276	277	278	280	281	282	283	284	289	295	296	297	298	303	313	314	316	317	318	320	321	322	324
R214	277	278	280	285	287	288	291	292	295	297	298	299	300	301	303	304	308	312	313	316	319	320	322	323
R215	315	316	318	321	324																			
R216	245	246	248	249	250	254	260	268	272	273	274	276	278	279	284	285	286	287	288	289	291	293	297	299
R217	256	257	262	263	264	268	270	271	272	273	274	275	276	278	279	280	281	284	285	288	289	291	292	293
R218																								
R219	259	260	261	264	265	267	268	269	270	275	277	281	283	285	286	287	288	290	291	292	293	294	295	297
R220	252	253	254	256	257	258	259	262	269	270	271	272	274	276	277	278	279	282	283	285	286	287	288	290
R221	311	312	313	314	316	318	320	322	325															
R222	277	280	282	284	285	287	290	291	292	295	296	302	303	304	305	314	317	318	319	322	325			
R223	314	315	316	317	318	319	321																	
R224	255	256	257	259	260	262	264	265	269	270	271	272	276	277	279	280	281	285	286	287	289	290	292	293
R225	246	247	249	250	251	252	253	256	258	260	263	268	269	277	279	280	284	290	291	292	293	297	299	300
R226	225	227	230	231	236	237	238	239	240	241	242	246	248	249	250	254	256	260	261	262	264	265	266	267
R227	257	258	259	261	262	267	273	277	283	284	290	292	293	295	301	305	306	307	309	310	312	314	316	317
R228	293	294	295	298	301	302	303	304	305	306	308	309	310	311	312	313	314	315	317	320	321	322	325	
R229	282	284	285	286	287	288	290	291	294	296	297	298	299	302	306	308	309	311	312	313	314	316	317	318
R230	275	276	278	280	286	288	290	293	294	296	297	298	299	300	302	303	315	316	319	320	323			
R231	259	261	263	264	265	266	267	268	270	275	277	281	282	284	286	289	295	298	301	303	304	306	307	310
R232	244	246	247	249	250	251	255	261	263	267	268	271	273	275	280	282	284	286	289	291	293	294	296	297
R233	254	259	263	269	271	272	273	274	276	277	279	280	281	282	284	285	287	289	292	294	296	298	299	300
R234	280	281	282	285	286	287	294	298	299	310	318	320	321	322	324									
R235	227	229	232	233	234	236	239	240	243	244	245	246	247	249	250	256	257	258	259	260	262	268	273	279
R236	266	268	272	273	274	276	277	278	279	281	282	283	285	286	287	289	290	291	293	294	295	296	298	306
R237	233	234	236	239	241	242	246	247	250	252	253	255	259	261	262	264	265	267	268	270	271	272	273	274
R238	268	269	270	271	273	275	281	294	296	297	304	306	307	310	311	312	314	315	316	324	325			
R239	295	297	299	301	302	303	304	305	307	310	313	315	318	319	321	322	324							
R240	310	313	319	321	322	323	325																	

Copyright © 2005 IEEE. All rights reserved.
This is an unapproved draft, subject to change

Table 55A–3—P matrix: location 49 to 72

	C49	C50	C51	C52	C53	C54	C55	C56	C57	C58	C59	C60	C61	C62	C63	C64	C65	C66	C67	C68	C69	C70	C71	C72
R241	262	265	269	270	271	273	279	280	282	283	286	288	290	291	294	295	297	299	301	302	304	305	308	310
R242	282	283	284	285	286	287	288	293	296	297	300	305	307	308	311	314	315	316	317	318	319	320	321	322
R243	265	267	268	271	275	279	289	291	294	296	297	298	304	305	306	309	315	316	318	323	325			
R244	249	250	253	254	255	256	258	259	260	263	267	268	271	273	275	277	279	280	284	285	286	289	291	292
R245	256	258	260	261	263	264	265	266	267	268	272	274	275	276	277	278	282	284	285	287	288	289	290	292
R246	285	287	288	289	290	293	295	296	297	298	300	302	303	304	306	308	309	310	311	313	316	317	318	319
R247	265	267	268	277	279	281	282	283	284	288	289	290	292	296	298	300	301	302	303	304	305	306	307	312
R248	258	260	262	263	264	265	267	269	272	273	274	275	276	277	278	281	282	284	286	288	291	292	293	294
R249	256	258	260	261	262	264	265	268	269	270	272	274	276	277	278	279	282	288	289	291	298	299	302	304
R250	248	250	254	257	259	261	262	263	265	266	268	271	273	277	280	281	284	286	287	288	289	290	294	297
R251	272	274	276	277	278	280	281	282	284	285	286	288	289	290	292	294	297	299	302	304	306	307	308	310
R252	267	270	275	277	281	284	286	287	289	290	298	301	303	305	306	311	316	319	320	322	323			
R253	253	255	256	258	259	262	264	267	268	270	272	274	276	277	278	279	280	281	283	285	289	291	294	297
R254	290	293	296	297	299	300	301	302	303	308	311	314	315	319	322									
R255	243	247	248	251	252	256	257	258	259	260	261	262	263	266	268	272	274	275	276	278	280	281	282	283
R256	250	251	252	253	255	256	257	258	259	260	261	262	264	267	268	269	271	272	274	275	276	278	279	282
R257	227	233	234	235	239	240	242	244	245	246	247	249	253	256	257	258	259	260	262	267	268	275	277	281
R258	252	254	255	256	258	259	261	265	270	272	274	275	276	277	278	280	283	284	289	290	292	294	295	296
R259	273	279	281	282	283	284	286	288	289	290	292	293	297	298	299	301	302	304	305	307	310	317	318	320
R260	276	278	279	281	282	286	291	292	294	295	296	297	298	301	303	305	310	311	313	314	316	319	320	322
R261	290	291	292	293	294	295	298	302	303	312	315	317	319	321	322	323	325							
R262	231	233	234	236	240	242	243	244	249	250	251	252	254	255	256	257	258	260	263	264	265	267	269	270
R263	281	282	286	287	288	289	290	291	292	294	297	298	300	305	306	307	308	309	310	313	316	317	318	319
R264	310	313	317	318	319	320	324																	
R265	262	264	265	266	267	269	271	273	278	280	282	283	285	288	289	290	291	292	293	294	295	298	305	307
R266	271	272	274	276	277	279	282	283	284	290	292	293	294	295	296	298	299	301	302	303	311	315	317	319
R267	305	306	307	308	311	312	314	317	318	319	320	323	324											
R268	229	232	233	234	236	239	240	241	243	245	246	247	248	256	257	258	259	262	263	265	266	267	269	270
R269	264	268	271	273	277	279	280	284	286	290	291	297	298	301	305	308	309	313	315	319	324			
R270	277	278	279	282	283	285	290	291	293	297	298	299	300	302	303	306	307	309	312	314	315	321	323	324
R271	275	276	278	279	283	289	291	299	301	302	303	309	311	312	316	317	318	320	322	323	325			
R272	249	250	253	256	258	259	260	268	270	273	280	283	286	287	288	289	290	292	294	295	298	302	303	305
R273	271	272	273	274	276	277	278	279	280	285	286	288	289	290	293	294	295	299	300	302	303	306	307	308
R274	289	290	294	295	297	299	301	302	305	308	309	310	312	313	314	318	319	320	321	323	325			
R275	279	280	281	284	285	290	292	298	299	301	303	304	307	310	318	321	322							
R276	301	306	307	309	311	314	316	317	318	321	325													
R277	273	275	277	280	281	282	285	286	287	288	289	290	291	293	294	297	300	301	302	305	307	308	309	310
R278	248	249	252	254	255	259	262	265	267	268	270	271	273	275	279	281	282	284	285	287	290	291	292	298
R279	240	242	244	250	253	261	269	271	272	274	275	276	277	278	281	282	284	287	288	290	292	294	299	300
R280	254	256	257	258	259	262	266	267	268	270	273	275	277	279	281	282	284	285	289	291	292	299	302	303
R281	270	271	273	278	279	280	288	290	291	292	296	297	298	300	302	304	305	307	308	310	317	318	324	
R282	257	260	262	263	264	265	266	267	269	271	273	279	282	283	284	288	289	290	291	293	294	296	298	299
R283	244	245	250	251	252	257	260	262	263	267	269	272	274	276	277	278	279	280	282	284	285	287	288	289
R284	256	258	259	263	264	265	266	269	271	273	275	277	278	279	280	282	284	286	290	291	293	295	297	298
R285	239	240	241	243	244	249	251	253	256	258	259	264	265	266	267	268	270	271	272	274	275	276	278	280
R286	283	288	291	292	293	296	298	299	301	303	305	309	311	313	314	315	320	321	322	323	324			
R287	262	265	266	267	268	271	272	274	275	276	278	280	282	283	284	287	289	297	300	301	302	305	306	307
R288	263	264	265	267	270	271	273	288	289	290	291	292	295	297	298	301	304	305	306	308	310	311	312	317
R289	266	269	271	272	273	274	276	278	281	284	286	288	290	291	292	293	294	295	297	298	299	300	304	305
R290	275	276	277	278	279	281	283	285	286	287	291	293	299	300	303	305	309	310	311	312	314	315	316	320
R291	286	287	290	291	294	298	300	301	302	307	309	310	312	316	317	322	325							
R292	279	281	283	284	286	294	295	296	297	299	300	302	304	305	307	308	309	310	311	314	317	318	321	323
R293	274	275	276	278	280	281	282	283	284	285	287	290	291	292	296	297	300	304	305	307	308	311	312	313
R294	264	265	266	267	268	269	270	273	275	280	281	282	283	284	285	286	287	292	293	294	295	296	297	298
R295	284	285	288	289	290	291	293	296	297	298	299	303	306	307	308	309	311	313	314	319	324			
R296	233	234	236	237	238	240	241	242	243	245	246	248	252	253	255	259	260	262	265	266	269	272	273	274
R297																								
R298	261	263	265	266	269	270	271	282	284	287	289	290	292	295	296	297	298	300	301	305	308	310	311	312
R299	236	237	239	240	242	244	245	246	249	256	258	259	260	262	264	268	270	272	274	276	277	278	281	286
R300	259	261	264	269	270	275	281	283	284	285	287	288	290	291	292	293	295	296	297	300	301	303	305	306

Copyright © 2005 IEEE. All rights reserved.
This is an unapproved draft, subject to change

Table 55A–3—P matrix: location 49 to 72

	C49	C50	C51	C52	C53	C54	C55	C56	C57	C58	C59	C60	C61	C62	C63	C64	C65	C66	C67	C68	C69	C70	C71	C72
R301	252	254	255	256	257	258	259	262	265	266	267	268	275	277	279	280	284	285	286	287	290	291	293	296
R302	297	299	302	303	304	309	312	313	315	316	317	323	325											
R303	248	249	250	255	258	260	264	269	271	272	273	274	275	276	277	278	279	285	286	288	290	291	293	296
R304	267	269	273	277	280	281	282	283	286	287	288	290	292	295	296	297	299	300	301	303	304	305	306	307
R305	256	258	259	260	264	267	272	273	274	276	277	278	279	281	283	286	287	288	289	293	296	298	299	300
R306	253	254	259	261	264	265	266	269	273	275	277	279	280	283	284	286	290	291	294	297	298	299	302	304
R307	227	229	230	234	235	238	242	244	245	246	247	250	251	252	253	257	259	260	261	263	264	265	266	268
R308	305	309	310	312	313	314	315	317	318	320	321													
R309	287	288	289	291	292	294	295	304	306	307	310	312	315	317	318	320	321	323	324					
R310	253	255	260	261	264	266	267	269	273	282	283	285	288	289	293	298	300	301	308	312	313	315	316	317
R311	291	292	294	296	297	298	304	305	307	308	309	310	312	314	315	320	321	323	324					
R312	270	271	273	279	281	282	285	286	290	293	294	295	297	298	300	301	302	303	305	307	309	314	315	318
R313																								
R314	253	254	256	257	258	259	261	262	266	269	270	272	273	274	275	276	277	278	280	281	283	285	291	294
R315	245	246	248	249	252	255	263	264	265	268	271	272	273	274	275	276	278	279	280	281	282	284	285	286
R316	259	262	266	268	269	270	272	273	274	275	276	277	278	280	281	282	285	286	288	289	290	292	293	294
R317	282	283	284	286	288	292	293	295	296	297	304	305	306	308	309	310	313	319	321	322	325			
R318	258	259	260	261	262	265	266	268	269	271	273	277	278	283	284	288	289	292	293	296	297	300	301	305
R319	269	270	275	279	280	281	283	285	286	288	290	293	295	296	298	299	300	305	308	309	313	314	317	319
R320	272	273	274	275	276	277	278	279	281	283	289	290	292	294	295	296	300	301	303	304	305	306	309	312
R321	272	273	274	275	276	278	279	283	284	285	287	288	293	296	297	298	299	300	301	305	307	308	310	313
R322	277	279	280	281	282	283	285	286	289	290	294	297	301	302	304	305	306	310	312	316	317	319	321	322
R323	277	278	282	283	284	285	287	290	292	293	297	299	300	301	306	307	308	313	316	321	323			
R324	269	270	273	275	277	279	282	284	289	293	294	295	296	297	298	299	302	303	304	307	308	309	311	312
R325	277	278	281	282	283	284	285	286	287	291	293	294	295	296	299	300	302	304	305	306	308	310	311	314
R326	251	253	255	258	259	261	265	269	271	272	273	274	276	277	278	281	282	285	286	287	288	293	294	295
R327	230	231	232	233	234	235	236	237	240	241	242	243	244	245	248	249	255	257	259	261	263	267	268	271
R328	252	253	255	259	260	261	264	265	267	270	271	272	274	277	278	279	280	284	285	287	288	289	290	293
R329	246	247	249	252	255	257	258	260	261	262	263	267	268	270	273	279	280	284	285	286	288	290	292	297
R330	268	270	275	279	280	281	283	284	286	287	288	289	290	291	292	293	295	296	297	299	302	305	306	307
R331	271	272	274	276	278	281	282	285	288	289	291	292	296	297	298	301	302	303	304	305	308	309	311	312
R332	279	281	285	286	287	290	295	297	299	300	302	303	304	305	307	308	309	311	312	314	317	319	322	
R333	297	298	299	300	304	309	310	311	314	315	318	319	320	321	322	323	324							
R334	254	255	259	260	267	269	271	273	275	280	282	283	286	289	290	291	292	295	301	303	304	305	306	308
R335	269	270	271	272	274	276	278	279	280	282	284	288	289	291	295	296	297	298	301	302	303	305	306	311
R336	250	251	252	254	255	257	259	260	261	263	265	266	267	269	273	275	277	279	280	282	283	288	289	290
R337	253	255	260	264	266	267	268	271	272	274	276	278	280	285	286	290	293	297	298	302	303	306	307	308
R338	249	250	255	257	258	261	262	263	267	269	270	272	273	274	275	276	277	278	282	287	288	289	290	293
R339	276	277	278	281	283	284	287	290	291	293	296	299	300	301	304	306	308	309	311	312	313	314	315	317
R340	251	253	255	256	257	258	259	260	261	262	264	266	269	271	277	280	281	282	286	289	291	292	293	295
R341	235	237	239	242	249	250	252	254	261	262	263	265	266	268	275	277	280	282	284	285	286	287	291	292
R342	262	264	265	266	269	271	272	273	274	275	276	277	278	282	285	286	288	294	297	298	299	301	303	305
R343	261	265	266	268	270	271	272	273	274	276	278	280	281	283	286	287	288	289	290	291	292	293	295	296
R344																								
R345	253	254	255	256	258	259	260	264	266	268	269	270	273	283	284	285	287	289	291	294	296	302	303	304
R346	288	292	293	296	297	299	300	301	305	307	308	310	313	315	316	317	321	322	323	324	325			
R347	260	261	262	263	264	265	266	269	271	275	280	281	283	284	285	290	291	295	298	299	302	303	305	309
R348	292	293	295	296	297	298	301	302	308	309	314	315	318	319	323	324	325							
R349	244	245	246	248	249	250	253	256	258	259	260	261	263	265	266	267	268	270	272	273	274	275	276	278
R350	240	241	246	247	248	250	252	253	254	260	261	263	264	266	267	268	271	272	273	274	276	278	279	281
R351	291	292	293	294	295	297	298	300	301	302	303	307	311	312	318	320	323							
R352	277	279	283	284	285	286	287	288	291	293	294	295	297	298	301	303	305	310	311	312	314	318	319	320
R353	291	292	293	297	298	300	302	304	306	308	309	311	314	316	318	319	320	321	322	324	325			
R354	268	271	278	279	281	284	286	288	290	292	294	295	297	298	299	301	302	303	304	305	307	308	309	311
R355	270	271	272	273	274	276	278	279	280	283	285	286	288	290	293	294	296	297	299	302	304	311	312	313
R356	283	285	286	289	290	292	294	295	296	299	300	301	302	303	304	306	308	309	312	313	315	317	321	322
R357	242	243	245	247	248	249	251	252	253	254	255	256	258	260	264	265	266	268	271	273	274	275	278	279
R358	245	246	247	251	255	261	263	266	268	269	270	271	272	273	274	276	278	282	284	285	287	289	292	295
R359	296	299	302	304	305	306	307	308	309	310	312	315	316	317	320	321	325							
R360	289	290	291	292	295	296	298	307	313	315	316	319	321	322	324									

Copyright © 2005 IEEE. All rights reserved.
This is an unapproved draft, subject to change

Table 55A–3—P matrix: location 49 to 72

	C49	C50	C51	C52	C53	C54	C55	C56	C57	C58	C59	C60	C61	C62	C63	C64	C65	C66	C67	C68	C69	C70	C71	C72
R361	325																							
R362																								
R363	275	277	281	285	286	287	289	294	296	297	300	304	305	306	307	308	313	317	321					
R364	261	264	265	266	267	269	270	271	273	277	278	279	280	282	283	285	287	289	292	293	298	301	302	303
R365	295	298	303	311	312	313	314	316	318	320	321	322	323	324	325									
R366	310	311	312	314	315	317	318	319	321															
R367	280	281	282	283	284	285	290	291	292	293	294	295	296	297	298	299	300	301	306	307	313	315	320	323
R368	244	247	249	250	251	253	259	261	263	264	265	266	269	271	272	274	275	276	277	278	280	282	285	286
R369	259	260	261	264	265	269	270	272	273	274	275	276	277	278	281	282	283	286	289	290	292	294	296	297
R370	244	245	246	248	250	251	253	254	258	259	268	269	275	277	279	280	282	283	284	285	286	287	289	290
R371	252	253	259	260	261	263	264	267	268	270	271	272	273	274	275	276	277	278	280	284	286	287	289	291
R372	252	255	259	262	267	269	270	271	272	273	274	275	276	277	278	279	283	286	288	290	292	293	295	299
R373	289	290	292	293	296	301	303	304	305	308	310	311	313	314	316	323	324							
R374	247	248	251	252	253	257	260	261	263	264	265	267	268	269	271	272	273	274	275	276	278	279	280	281
R375	304	305	309	310	316	320	324																	
R376	261	265	269	270	272	273	274	276	278	279	280	281	285	287	292	293	295	297	298	302	303	305	308	309
R377	269	270	273	282	283	284	287	290	291	293	294	295	296	299	300	302	305	307	314	315	317	320	325	
R378	268	269	270	271	272	274	275	276	277	278	282	285	286	287	288	290	291	292	298	301	303	304	307	308
R379	300	305	307	309	311	312	314	315	316	319	322													
R380	282	285	288	291	292	294	299	302	306	307	309	312	313	315	317	318	321							
R381	247	248	250	251	252	253	255	260	263	264	266	267	268	269	270	272	273	274	276	277	278	279	281	282
R382	287	289	291	293	294	296	297	299	300	303	304	306	307	309	310	311	312	315	320	321	322	323	324	
R383	285	287	289	290	291	292	293	296	304	306	309	312	315	316	317	318	319	323	324					
R384	266	267	269	270	271	272	274	275	276	277	278	279	281	283	285	291	292	293	299	300	302	305	306	307
R385	308	310	311	312	315	318	320	321	323	324	325													
R386	242	244	245	246	247	250	251	255	256	257	258	259	261	262	264	266	267	268	273	277	278	280	281	284
R387	278	281	282	285	287	288	289	293	296	298	304	305	306	307	308	310	311	313	314	315	316	319	320	321
R388	237	238	239	241	242	243	244	250	252	263	267	268	271	275	277	280	281	283	284	288	290	292	294	295
R389	271	273	275	277	280	291	292	293	298	306	307	311	312	314	315	316	317	318	321	322	325			
R390	267	268	270	272	274	275	276	277	278	279	281	284	285	286	287	288	289	291	292	294	299	302	305	306
R391	291	292	295	297	298	299	300	305	306	307	308	311	312	316	317	319	322	323	325					
R392	279	280	281	285	286	289	290	291	292	293	294	297	298	299	301	302	305	308	309	312	315	316	317	318
R393	263	264	269	272	273	274	276	277	278	280	281	283	285	287	292	293	294	296	299	300	301	304	306	308
R394	253	254	255	261	265	266	267	269	270	272	273	274	276	277	278	280	285	288	290	296	297	299	301	307
R395	274	276	278	279	282	283	285	286	290	291	292	296	297	301	304	307	308	309	310	312	315	316	317	320
R396	250	251	253	254	257	260	262	264	266	271	272	273	274	276	277	278	279	283	285	286	292	296	298	299
R397	245	249	251	253	254	255	256	257	258	260	261	262	263	266	267	269	270	272	273	274	275	276	277	278
R398	284	287	288	289	290	291	292	293	294	296	297	299	300	301	303	304	305	307	308	309	315	321	322	323
R399	279	280	283	284	285	286	287	289	290	291	293	294	295	301	303	304	306	309	310	311	312	314	316	322
R400	263	265	270	271	279	285	287	289	290	291	292	293	294	295	296	299	303	305	306	308	312	315	316	319
R401	287	288	289	290	293	294	297	306	307	308	310	315	316	318	319	321	322	324	325					
R402	248	250	251	252	253	257	260	262	265	266	268	271	272	273	274	276	278	281	282	284	290	294	297	298
R403	247	252	253	255	259	260	261	263	265	268	270	271	277	281	282	283	285	286	288	290	291	292	296	298
R404	260	263	264	265	275	280	281	282	284	285	288	290	292	296	298	300	304	305	307	311	314	315	317	319
R405	232	234	236	241	248	253	254	259	261	263	266	268	270	271	272	273	274	276	278	280	282	285	287	290
R406	285	287	289	290	291	292	294	296	298	300	302	306	307	308	309	310	311	316	317	320	324			
R407	298	300	301	303	305	306	309	312	317	318	320	321	325											
R408	260	262	263	264	265	266	267	269	272	273	274	275	276	278	280	282	283	288	290	291	294	295	297	298
R409	296	297	298	299	301	302	303	304	305	308	310	311	312	315	316	318	320	321	322	324	325			
R410	270	271	272	274	276	279	282	284	285	286	287	288	289	292	297	301	302	303	305	306	307	313	316	317
R411	253	254	255	256	258	259	260	261	263	264	269	271	272	273	274	276	278	280	281	283	284	286	289	291
R412	301	302	307	310	311	313	314	315	318	319	321													
R413	259	262	263	264	265	275	277	280	284	285	289	291	292	295	296	299	303	304	305	307	308	312	313	315
R414	276	277	278	281	284	286	288	289	290	291	292	293	295	296	297	298	302	306	311	312	319	324	325	
R415	294	297	299	300	301	306	310	311	312	313	314	317	318	320	321	322	324							
R416	279	280	283	284	286	287	289	290	292	294	296	297	300	303	304	307	310	313	316	317	318	319	321	323
R417	294	295	297	298	299	301	302	303	305	308	312	315	318	321	325									
R418	247	248	249	250	251	252	254	257	259	262	265	268	271	275	277	279	281	284	289	290	291	292	293	299
R419	272	274	275	277	278	279	281	283	285	286	289	291	293	295	301	303	305	306	310	312	313	316	317	322
R420	285	288	296	299	302	303	308	310	312	316	317	319	320	321	324									

Copyright © 2005 IEEE. All rights reserved.
This is an unapproved draft, subject to change

Table 55A–3—P matrix: location 49 to 72

	C49	C50	C51	C52	C53	C54	C55	C56	C57	C58	C59	C60	C61	C62	C63	C64	C65	C66	C67	C68	C69	C70	C71	C72
R421	276	278	279	280	281	282	283	284	289	290	292	293	294	296	298	299	301	302	303	304	306	308	316	319
R422	287	288	289	293	295	297	300	303	306	307	309	315	316	317	318	320	321	323	325					
R423	257	258	259	262	263	265	266	271	272	274	275	276	278	279	280	284	285	288	289	290	293	296	298	299
R424	292	293	297	298	306	307	309	311	313	314	320	322	323	324	325									
R425	254	259	265	267	268	270	272	274	276	277	278	280	281	282	284	285	287	288	291	292	293	295	296	297
R426	276	278	279	281	286	289	291	292	294	295	296	297	300	303	305	311	312	313	314	315	316	317	319	320
R427	279	280	283	284	286	287	288	290	292	293	295	296	297	298	299	301	302	303	305	306	308	309	311	313
R428	262	265	266	267	269	270	271	273	275	281	282	284	289	291	293	296	298	299	300	301	302	303	306	309
R429	279	280	282	285	286	287	288	290	291	294	295	296	298	299	301	305	307	308	311	313	314	315	316	318
R430	250	252	254	256	258	263	266	267	268	270	272	274	275	276	278	280	283	289	292	296	297	301	303	304
R431																								
R432	256	258	259	260	266	268	271	272	273	274	276	277	278	279	280	282	283	284	285	287	291	292	294	296
R433	270	271	275	277	281	283	284	285	288	294	295	299	300	302	309	310	311	314	316	318	320	322	323	324
R434	232	233	234	236	241	244	245	246	248	250	256	258	259	260	263	264	265	266	268	271	272	273	274	275
R435																								
R436	257	261	262	263	264	266	268	269	273	275	278	283	285	286	289	291	292	297	298	300	301	302	304	306
R437	308	309	311	312	313	314	317	319	320	321	324													
R438	251	253	255	256	261	263	265	266	268	270	271	272	273	274	276	277	278	279	282	284	287	291	294	295
R439	316	318	319	321	322																			
R440	256	257	258	260	261	262	263	265	266	268	269	272	274	275	276	277	278	280	282	284	286	287	288	290
R441	265	266	267	268	269	270	271	279	282	285	287	288	289	291	297	298	302	303	305	306	310	316	318	319
R442	270	272	273	274	276	277	278	279	280	283	285	286	287	291	294	295	296	298	299	300	301	302	304	305
R443	256	258	260	261	263	264	266	267	268	269	271	272	273	274	276	278	281	282	285	287	289	292	293	295
R444	268	269	270	271	272	274	275	276	278	279	284	285	286	288	289	291	294	295	302	305	310	311	313	314
R445	244	245	248	250	253	254	255	256	260	261	264	266	267	268	270	271	272	274	275	276	278	279	280	281
R446	268	270	272	273	274	276	278	282	284	286	288	289	290	291	293	295	296	299	303	304	306	307	308	312
R447	235	236	237	238	239	240	242	243	244	247	248	249	252	254	257	260	264	265	267	268	272	273	274	276
R448	268	269	272	274	276	278	280	282	283	290	292	297	298	300	303	304	307	308	310	314	315	317	318	
R449	305	308	312	313	320	321	323																	
R450	245	247	249	251	253	255	256	258	260	262	265	266	267	269	273	279	281	287	288	292	294	295	296	297
R451	303	307	309	314	315	316	317	319	321	322	324													
R452	275	276	278	280	287	288	289	292	293	295	296	297	298	301	302	303	304	305	306	307	308	309	310	311
R453	310	317	318	320	322	324	325																	
R454	282	284	285	286	288	289	293	296	297	298	303	304	306	310	311	313	314	315	316	317	318	320	322	323
R455	237	238	242	244	245	247	250	252	253	256	257	258	259	260	261	262	264	266	269	270	271	272	274	276
R456	265	268	272	274	276	277	278	283	285	286	287	290	291	295	298	300	301	302	306	308	310	313	314	315
R457	264	265	266	267	273	277	282	285	286	288	290	291	292	293	294	300	301	305	308	312	315	317	319	320
R458	289	292	293	294	296	297	298	299	302	303	306	308	315	317	318	319	320	323	325					
R459	256	258	263	264	265	269	271	272	274	276	277	278	279	282	283	287	292	293	295	298	299	300	301	305
R460	275	276	278	283	284	288	289	290	293	295	296	298	303	304	307	309	310	311	313	314	315	316	318	321
R461	296	297	298	300	302	307	308	310	313	315	316	318	319	322	323									
R462	256	257	258	259	261	262	263	265	266	268	270	272	273	274	276	278	279	280	282	283	285	286	287	292
R463	246	247	252	253	255	260	263	265	269	270	272	274	276	277	278	279	281	284	288	290	291	293	295	296
R464	230	231	232	233	235	236	239	240	241	243	244	249	252	253	254	257	260	262	265	268	270	271	272	274
R465	257	262	264	266	267	271	273	283	284	287	289	290	293	295	298	299	301	305	306	311	315	317	319	320
R466	263	267	270	272	273	274	276	277	278	281	282	283	284	286	289	292	294	295	296	298	299	300	301	302
R467	266	267	268	269	277	279	280	283	284	285	286	287	289	290	295	297	300	302	304	305	306	307	308	313
R468	250	251	252	253	254	255	257	258	259	260	261	262	263	264	265	266	268	270	272	273	274	276	277	278
R469	246	248	251	252	253	255	260	261	263	267	268	270	272	274	275	276	278	279	280	282	286	287	288	295
R470	260	261	262	265	269	270	271	279	280	281	284	286	287	291	294	295	298	303	306	312	313	316	319	320
R471	274	276	278	279	280	282	283	285	286	287	289	291	294	296	298	301	302	305	306	307	309	310	312	313
R472	252	253	254	255	256	257	258	259	261	262	264	267	270	271	272	273	274	275	277	278	279	280	281	282
R473	291	292	293	294	296	305	306	307	309	310	311	313	314	315	316	319	320	324	325					
R474	256	258	259	267	269	271	272	273	274	275	276	277	278	280	283	284	285	291	293	294	296	297	300	304
R475	278	279	284	287	288	289	291	293	294	295	299	303	304	305	306	308	310	311	312	313	315	316	317	318
R476	250	252	253	255	259	260	261	263	264	265	267	271	272	274	275	276	278	281	283	285	287	289	293	294
R477	257	258	259	262	263	264	265	268	269	270	271	272	273	275	276	281	286	287	288	290	291	292	293	294
R478	297	302	303	304	307	308	312	314	318	320	321													
R479	310	311	313	314	315	318	321																	
R480	279	281	282	285	287	288	289	294	295	296	298	305	306	307	308	309	313	317	318	321	322	323	324	

Copyright © 2005 IEEE. All rights reserved.
This is an unapproved draft, subject to change

Table 55A–3—P matrix: location 49 to 72

	C49	C50	C51	C52	C53	C54	C55	C56	C57	C58	C59	C60	C61	C62	C63	C64	C65	C66	C67	C68	C69	C70	C71	C72
R481	287	289	290	291	294	296	297	299	300	302	303	304	306	307	309	310	314	315	317	318	319	321	322	323
R482	252	253	254	257	260	261	262	263	268	272	273	274	275	276	278	280	282	285	287	288	290	291	293	296
R483	257	258	260	261	264	266	267	269	270	279	280	283	285	286	287	288	289	292	293	294	299	300	301	302
R484	284	285	287	288	289	290	293	294	295	297	299	300	301	306	307	309	311	312	314	316	324			
R485	227	229	230	233	236	238	240	241	242	245	246	247	253	255	256	258	261	263	270	271	277	279	280	282
R486	282	283	284	285	287	288	292	294	296	297	298	304	305	310	311	312	315	317	318	319	320	321	322	323
R487	242	243	244	247	248	249	250	253	255	256	257	258	259	260	262	264	266	267	269	270	271	275	279	281
R488	284	285	290	292	295	296	297	298	302	303	307	308	309	311	313	314	315	317	318	319	320	322	324	
R489	253	256	257	258	260	261	265	266	267	268	269	270	271	277	279	281	283	284	288	295	301	302	305	309
R490	258	259	265	267	268	270	271	272	274	275	276	277	278	279	280	281	285	289	290	293	294	295	296	297
R491	303	305	310	311	316	318	319	321	325															
R492																								
R493	278	280	282	283	285	287	288	289	290	291	292	293	294	297	299	302	303	306	307	308	309	311	312	315
R494	322																							
R495	238	240	242	244	245	246	249	250	255	256	258	261	263	266	268	269	271	272	273	274	276	277	278	281
R496	265	266	267	269	271	279	280	281	283	284	288	289	292	294	295	297	298	299	302	303	304	305	306	309
R497	261	269	271	272	273	274	275	276	277	278	279	281	282	286	287	288	289	293	295	296	298	299	300	303
R498	273	274	276	277	278	280	281	282	284	286	290	291	292	294	295	297	298	300	302	305	307	308	310	312
R499	243	244	246	248	250	251	254	255	257	259	261	262	268	271	272	273	274	275	276	278	279	280	281	282
R500	227	228	237	238	241	242	245	247	248	250	251	252	253	254	257	258	259	260	262	264	265	266	268	271
R501	300	302	303	305	308	309	313	314	316	317	318	320	321	323	325									
R502	263	265	267	268	269	270	272	273	274	276	281	282	283	285	286	287	292	293	294	295	299	300	301	303
R503	278	279	280	283	287	290	291	293	294	296	304	308	309	310	316	317	319	321	322	324	325			
R504	246	247	248	250	251	252	253	254	255	259	260	261	269	270	272	273	274	275	276	277	278	279	281	282
R505	281	282	285	287	289	291	292	293	294	295	299	301	302	304	308	311	314	315	316	317	318	321	322	324
R506	252	253	254	259	261	263	269	272	274	276	278	279	281	282	284	288	290	292	295	297	299	301	302	303
R507	276	277	278	283	284	285	287	295	297	299	303	305	306	307	314	315	317	318	320	322	323			
R508	255	256	257	258	259	260	261	262	264	265	266	267	268	270	275	277	279	280	283	285	287	288	290	292
R509	276	277	278	281	288	289	290	291	293	294	295	297	298	299	301	306	308	310	311	315	316	318	320	322
R510	235	238	239	240	241	242	244	246	247	248	249	250	251	253	254	260	263	269	270	273	275	279	282	286
R511	276	277	278	280	284	285	287	288	289	292	293	295	296	297	299	301	302	303	304	305	306	308	309	311
R512	264	265	267	269	271	272	273	274	276	277	278	279	281	282	283	285	287	289	291	293	297	298	300	302
R513	257	259	260	262	263	264	265	267	268	269	270	271	272	274	275	276	278	279	282	283	284	285	287	291
R514	250	251	253	256	258	259	260	261	263	272	274	275	276	277	278	280	281	288	289	291	293	294	296	298
R515	262	266	267	269	271	277	279	283	284	286	288	289	290	291	293	294	295	297	298	299	301	302	303	304
R516	302	303	305	307	308	309	310	311	313	314	316	319	320	322	323	324	325							
R517	257	258	259	261	264	266	267	269	277	279	280	284	289	290	294	295	298	299	305	306	308	309	312	313
R518	290	291	292	294	295	299	300	301	302	305	306	311	315	319	323									
R519	245	246	247	249	252	256	261	263	265	266	269	270	275	281	282	284	286	289	290	292	293	295	296	297
R520	256	257	259	260	261	262	263	264	265	266	267	269	270	273	276	277	280	281	282	285	288	290	291	292
R521	252	254	255	256	258	261	265	267	269	272	274	276	277	278	279	281	282	286	287	288	291	292	293	296
R522	316	319	320	321	323	324	325																	
R523	255	257	261	262	264	267	268	272	273	274	276	278	279	280	281	282	283	285	286	287	289	292	293	295
R524	255	257	258	261	262	263	266	269	270	271	273	275	279	281	282	283	287	288	291	294	295	296	297	298
R525	272	274	276	279	281	283	284	287	289	290	291	294	295	296	299	301	302	304	305	306	307	311	312	313
R526	246	248	250	251	253	256	258	261	263	264	268	275	277	281	282	286	289	290	294	296	298	302	303	304
R527	239	244	245	250	252	253	255	256	257	258	259	260	262	263	264	266	267	268	270	272	273	274	275	276
R528	252	254	257	260	264	267	268	270	272	274	275	276	278	280	283	293	295	296	297	298	299	300	301	302
R529	288	289	290	291	296	299	304	305	306	309	311	312	313	316	317	319	321	322	325					
R530	315	316	319	320	323																			
R531	254	255	256	257	258	261	262	265	266	268	273	277	284	288	290	291	293	294	298	299	300	301	302	305
R532																								
R533	289	290	293	297	300	304	305	306	308	310	311	312	313	315	317	319	320							
R534	266	268	269	271	273	279	281	282	283	285	288	289	290	291	292	293	296	297	298	299	302	303	305	306
R535	239	240	243	244	248	250	252	253	254	256	261	263	264	265	266	267	268	271	272	274	275	276	277	278
R536	249	253	256	257	258	259	260	262	264	265	269	270	271	272	273	274	276	277	278	279	280	282	283	286
R537	248	249	251	253	254	255	262	263	264	269	272	273	274	276	280	284	288	289	290	291	292	293	295	297
R538	248	251	257	260	261	264	265	266	267	268	269	275	277	282	284	287	288	294	295	296	301	304	305	307
R539																								
R540	255	257	259	262	267	268	270	271	272	273	274	275	276	277	278	280	281	282	283	285	286	287	290	291

Copyright © 2005 IEEE. All rights reserved.
This is an unapproved draft, subject to change

Table 55A–3—P matrix: location 49 to 72

	C49	C50	C51	C52	C53	C54	C55	C56	C57	C58	C59	C60	C61	C62	C63	C64	C65	C66	C67	C68	C69	C70	C71	C72
R541	262	266	268	269	271	272	274	276	278	286	287	289	295	298	302	303	305	306	309	311	315	316	319	320
R542	236	239	241	245	246	247	253	254	255	259	260	263	267	268	271	277	278	279	280	281	283	284	287	288
R543	281	283	284	285	286	287	288	289	291	292	293	296	297	300	301	303	309	311	312	313	314	315	316	317
R544	262	265	266	267	270	279	280	282	283	285	288	289	290	291	295	296	298	299	301	302	303	304	305	307
R545	277	280	282	283	287	290	291	292	297	298	299	300	302	303	305	308	309	310	316	317	318	323	324	
R546	265	266	268	270	271	279	280	281	282	283	288	289	290	291	293	295	296	299	301	302	304	305	306	310
R547	238	242	245	246	247	248	250	252	253	256	258	260	263	264	265	269	271	272	274	276	277	278	279	281
R548	241	242	244	246	247	248	249	252	256	257	258	259	260	262	265	269	272	274	276	278	284	285	291	294
R549	263	265	266	269	270	271	275	277	280	281	282	283	284	285	291	293	299	300	301	302	304	307	308	309
R550	304	305	306	307	308	310	312	313	315	316	317	318	319	323	325									
R551	237	241	245	250	251	252	257	261	262	266	271	277	280	283	285	286	288	289	291	293	295	297	298	300
R552																								
R553	262	266	268	270	272	274	276	278	279	281	283	290	291	292	293	294	295	296	297	298	299	300	301	302
R554	255	256	257	258	259	260	261	262	263	264	265	266	268	272	274	275	276	277	278	280	281	283	284	286
R555	256	258	260	261	264	265	266	269	270	272	274	276	278	279	284	286	287	288	290	294	299	300	301	302
R556	283	284	285	287	289	292	294	295	296	297	298	299	300	302	303	304	305	309	310	312	313	315	318	321
R557	253	254	256	257	258	262	263	265	266	268	269	270	272	274	275	276	277	278	280	282	286	287	288	289
R558	236	237	241	242	248	250	251	252	254	260	262	263	264	269	270	272	274	275	276	278	279	280	284	285
R559	257	258	260	262	263	265	266	267	269	270	271	272	274	275	276	278	280	282	283	284	285	288	290	293
R560	253	254	255	258	260	261	263	264	266	267	268	270	271	273	277	279	281	283	291	292	293	297	299	300
R561																								
R562	288	289	291	292	293	295	296	299	300	303	311	312	314	315	316	318	319	320	321					
R563	277	280	289	290	292	293	294	296	298	299	301	303	304	305	306	312	315	317	321	323	325			
R564	295	299	301	302	304	306	309	310	311	312	314	316	317	318	319	321	323							
R565	255	263	264	267	268	277	280	282	283	285	287	288	289	290	291	294	295	296	300	301	302	305	307	312
R566	288	293	294	295	297	298	300	303	305	309	313	315	317	318	320	321	322	323	324					
R567	294	297	298	300	303	305	307	308	311	312	316	321	323	324	325									
R568	266	267	268	270	273	275	279	280	282	283	286	287	288	290	291	295	296	302	303	304	305	307	308	310
R569	268	269	270	277	284	287	289	290	291	292	293	294	296	298	302	303	305	310	313	315	317			
R570	244	245	246	248	251	252	255	260	261	262	263	265	266	267	272	274	276	277	278	281	284	285	288	290
R571	316	317	318	321	322	324	325																	
R572	284	288	295	296	297	299	302	304	305	309	310	313	314	316	318	320	323							
R573	237	238	239	241	242	243	245	248	252	255	256	259	263	264	269	272	274	275	276	277	278	279	280	283
R574	287	288	289	290	292	295	296	299	301	303	304	306	307	309	310	311	312	314	315	316	320	322	325	
R575	252	255	256	258	259	260	265	266	269	270	279	281	282	286	289	291	293	294	295	296	298	301	304	306
R576	216	217	219	220	221	222	225	226	227	229	232	233	235	237	240	242	248	250	253	254	255	259	260	261
R577	269	270	281	283	284	286	288	292	294	295	298	300	301	309	313	318	319	320	321	323	324			
R578	246	257	262	267	268	276	279	280	284	289	290	291	295	296	297	298	299	300	301	302	303	306	307	308
R579	261	263	264	267	268	273	277	280	284	287	289	290	294	295	297	298	299	300	301	303	304	305	307	310
R580	255	257	264	268	271	272	274	276	277	278	280	283	287	289	290	292	293	300	302	306	307	308	313	315
R581	267	269	272	274	276	278	279	280	282	283	285	286	287	289	292	295	299	300	301	303	304	305	308	309
R582	248	254	255	256	258	260	264	266	269	270	271	272	273	274	276	278	280	281	282	285	286	288	290	294
R583	251	255	257	259	261	262	264	269	272	274	275	276	277	278	279	282	284	285	287	288	289	291	292	296
R584	245	246	247	248	249	250	252	254	255	261	262	263	264	265	269	279	280	283	284	286	287	288	291	293
R585	281	283	284	288	289	290	291	292	293	295	296	298	300	301	306	307	313	315	318	320	322	323	325	
R586	290	295	296	297	299	300	302	305	306	309	310	311	315	317	318	319	320	322	323	324	325			
R587	262	264	269	270	272	273	274	275	276	278	279	281	285	287	291	292	293	295	299	300	301	302	303	305
R588	294	296	298	301	302	304	305	308	310	311	312	314	318	319	320	321	325							
R589	253	255	256	257	258	260	262	263	264	265	266	267	268	271	273	277	285	289	291	293	294	295	296	299
R590	308	310	314	319	320	321	322	323	324															
R591	241	242	243	244	245	248	249	250	251	252	257	259	260	262	263	268	271	273	277	279	282	283	284	288
R592	261	262	263	264	267	270	271	272	274	275	276	277	278	280	281	284	285	286	287	288	290	292	293	295
R593	232	236	240	241	243	244	246	247	248	249	250	252	253	255	257	260	262	265	266	269	270	272	274	276
R594	258	259	262	263	266	267	270	272	274	275	276	277	279	280	281	282	285	288	290	294	295	298	299	300
R595	272	273	274	275	276	278	279	280	282	283	285	286	287	290	291	293	294	296	297	298	301	303	304	307
R596	242	244	246	249	250	251	253	254	256	257	258	262	265	267	268	271	272	274	275	276	278	282	283	285
R597	277	279	282	284	286	288	290	291	292	293	294	299	301	303	305	307	308	309	310	311	312	313	314	318
R598	257	261	262	266	268	271	272	273	274	275	276	278	280	282	283	285	286	287	288	292	293	296	298	299
R599	278	280	283	284	289	290	293	294	295	296	297	301	304	306	309	311	313	317	319	320	321	322	324	
R600	248	249	251	257	262	264	265	272	273	274	276	277	278	279	280	281	282	284	285	288	291	293	296	301

Copyright © 2005 IEEE. All rights reserved.
This is an unapproved draft, subject to change

Table 55A–3—P matrix: location 49 to 72

	C49	C50	C51	C52	C53	C54	C55	C56	C57	C58	C59	C60	C61	C62	C63	C64	C65	C66	C67	C68	C69	C70	C71	C72
R601	269	273	274	275	277	278	279	280	281	282	283	285	287	288	292	295	297	298	299	300	301	303	308	309
R602	287	290	292	294	296	297	298	300	304	305	306	308	310	312	313	316	317	318	319	320	321	322	324	
R603	266	268	271	279	280	282	283	286	290	291	295	298	302	303	304	305	308	310	311	312	314	315	316	317
R604	251	252	253	256	258	260	265	266	268	273	279	280	282	283	285	286	287	288	289	291	295	296	298	299
R605	285	286	287	290	292	294	296	298	299	300	301	302	304	307	310	311	312	314	315	317	318	319	320	321
R606	244	245	250	251	252	253	255	259	260	263	264	269	273	275	277	279	280	281	282	283	284	286	290	292
R607	245	246	247	248	249	251	252	253	256	257	258	259	261	262	269	270	271	277	282	283	284	285	286	298
R608	251	254	257	262	263	265	270	279	281	283	286	287	288	291	293	297	298	299	301	302	303	304	309	312
R609	253	256	258	259	260	269	271	272	273	274	275	276	277	278	279	284	285	287	288	289	290	291	293	296
R610	289	291	292	298	299	303	305	306	307	308	309	312	316	317	318	321	322							
R611	279	284	288	289	291	293	295	296	297	299	301	302	303	304	307	308	310	311	312	314	315	316	319	321
R612	249	251	253	254	255	256	258	260	261	264	267	269	270	273	279	281	284	286	287	289	290	291	293	294
R613	252	253	255	256	257	258	259	266	267	268	269	271	272	273	274	275	276	278	279	280	281	282	288	289
R614	258	262	264	265	267	268	271	273	275	277	278	279	282	286	289	291	292	293	294	295	296	299	301	303
R615	252	253	255	258	260	264	265	269	270	271	273	275	277	281	282	283	284	287	289	293	297	298	301	302
R616	245	246	247	249	250	252	255	256	257	258	259	262	263	264	267	271	272	273	274	276	277	278	280	281
R617	263	264	265	266	267	272	273	274	276	278	279	281	287	288	289	290	291	296	302	304	306	307	309	313
R618	273	274	278	279	281	283	286	287	289	290	292	294	296	301	302	304	306	308	310	311	314	316	317	318
R619	264	265	266	267	270	275	279	283	284	286	287	288	289	290	291	292	293	294	295	297	298	300	301	302
R620	265	266	270	271	272	274	276	278	279	280	284	286	288	290	291	292	295	298	299	300	301	304	306	307
R621	279	281	282	283	284	285	286	287	288	292	293	295	296	298	306	307	308	309	312	313	315	316	319	321
R622	244	248	250	254	261	263	264	265	272	273	274	276	278	279	281	282	284	285	286	288	291	292	297	299
R623	301	303	305	306	307	308	309	312	315	317	318	319	321											
R624	296	297	298	299	305	306	310	313	319	320	323													
R625	242	243	244	245	250	254	255	257	259	262	263	265	268	277	278	280	281	282	283	285	287	289	290	293
R626	289	290	292	294	296	297	300	303	306	308	310	311	313	314	316	318	319	320	322	323	325			
R627	282	286	287	288	289	291	293	296	297	304	308	309	310	315	318	319	323	324	325					
R628	241	242	246	249	250	251	252	255	256	258	259	261	262	263	264	267	275	277	279	282	284	288	289	292
R629	242	245	246	247	253	254	255	257	260	265	266	268	272	273	274	275	276	278	279	280	281	284	285	287
R630	268	269	270	272	274	276	277	278	280	281	286	287	288	290	296	297	301	303	307	308	311	312	315	316
R631	241	242	243	246	253	254	255	263	268	271	273	279	281	284	288	289	290	291	293	295	296	297	298	299
R632	287	288	290	293	296	297	302	303	317	322	323													
R633	308	310	311	314	317	319	320	321	322	324	325													
R634	245	246	248	250	251	252	255	256	257	258	260	261	262	265	269	270	273	275	277	279	280	281	282	283
R635	285	286	289	293	299	301	304	310	311	313	314	315	317	318	319	321	323							
R636	255	256	257	258	261	262	263	264	265	272	273	274	276	278	280	281	282	285	291	292	294	296	297	298
R637	226	227	229	232	233	234	235	237	238	241	242	243	244	245	247	248	251	252	254	259	263	266	267	269
R638																								
R639	245	248	249	250	251	252	254	255	256	258	261	263	265	266	268	272	274	276	278	279	280	281	282	283
R640	279	282	286	288	289	292	295	302	308	310	311	312	314	317	319	320	323	324	325					
R641	217	220	221	222	224	225	226	227	228	229	232	238	239	241	244	250	251	252	253	254	255	257	258	261
R642	282	284	288	289	290	293	295	296	297	298	301	304	306	307	309	313	315	316	317	318	319	321	322	324
R643	262	265	266	267	268	269	271	272	274	276	277	278	279	280	282	284	286	292	294	295	296	297	305	307
R644	239	242	245	247	251	254	256	257	258	260	261	262	264	266	267	269	271	272	274	275	276	277	278	279
R645	249	251	252	253	254	255	256	258	259	261	264	265	268	269	271	272	274	276	277	278	279	281	283	286
R646	267	269	275	280	284	286	289	290	291	292	293	295	296	299	300	302	304	305	306	312	313	316	317	318
R647	249	250	252	253	255	256	257	258	259	262	265	266	267	268	272	273	274	276	277	278	279	280	281	283
R648	281	283	284	286	288	290	291	292	294	295	299	300	301	302	303	304	305	308	312	314	316	317	318	322
R649	240	241	242	243	244	245	249	251	252	254	255	256	257	259	261	264	265	266	269	270	280	281	282	285
R650	247	250	255	257	262	270	272	274	276	277	278	281	282	286	287	288	289	290	291	292	294	300	301	303
R651	281	282	286	288	289	290	293	294	297	300	301	302	303	305	306	307	310	311	314	318	319	321	323	324
R652	285	287	290	291	293	294	296	298	299	304	306	308	309	312	314	315	316	319	322	323	325			
R653	242	243	244	245	246	249	250	251	252	253	257	258	260	261	262	265	269	272	274	275	276	277	278	279
R654	253	254	255	259	260	263	267	271	272	274	275	276	277	278	279	280	282	283	285	286	292	293	296	297
R655	247	249	250	253	254	256	257	258	260	262	265	267	269	271	277	281	283	284	288	289	292	295	296	298
R656	248	249	250	251	254	255	256	259	261	262	263	265	266	269	272	273	274	276	278	279	280	281	282	283
R657																								
R658																								
R659	249	250	252	253	254	256	258	259	261	262	264	268	269	271	277	280	281	282	284	285	286	287	289	294
R660	239	241	242	243	244	246	248	249	250	251	252	254	255	256	257	258	261	262	264	268	271	272	274	276

Copyright © 2005 IEEE. All rights reserved.
This is an unapproved draft, subject to change

Table 55A–3—P matrix: location 49 to 72

	C49	C50	C51	C52	C53	C54	C55	C56	C57	C58	C59	C60	C61	C62	C63	C64	C65	C66	C67	C68	C69	C70	C71	C72
R661	227	233	235	237	242	243	244	247	248	249	250	251	254	256	257	258	259	260	261	262	265	266	267	268
R662	293	295	298	299	300	301	302	311	314	315	317	319	322											
R663	256	258	259	264	266	267	268	272	274	276	278	279	283	285	286	287	288	289	290	292	293	294	295	298
R664	276	278	279	284	285	286	288	289	290	292	293	294	296	298	300	301	302	306	308	315	316	318	321	323
R665	286	288	290	293	296	297	301	302	303	304	311	312	313	314	316	318	319	320	321	324	325			
R666	265	267	269	271	275	277	281	283	288	291	293	296	303	304	308	309	310	312	313	314	315	317	319	322
R667	281	282	286	289	290	293	294	295	297	298	301	303	306	307	309	313	315	317	320	321	322	324	325	
R668	273	275	279	280	281	282	284	286	287	293	294	295	296	301	303	304	305	309	311	313	315	317	322	323
R669	315	318	319	320	322	323	324																	
R670	253	254	260	263	272	274	275	276	277	278	279	281	282	285	287	289	291	293	295	296	299	300	301	302
R671	302	304	305	306	309	310	314	317	318	321	322	324	325											
R672	223	227	229	230	231	232	233	234	235	237	238	240	241	243	245	255	259	260	262	264	265	267	269	272
R673	247	248	249	251	253	257	261	262	264	266	269	270	271	277	289	290	291	292	295	296	297	299	300	304
R674	251	252	257	259	260	262	263	266	267	269	272	274	275	276	278	279	281	282	284	288	289	290	293	295
R675	263	264	267	273	275	283	287	288	289	296	299	300	301	303	308	311	312	313	315	317	322			
R676	275	276	278	279	281	282	283	285	286	287	288	290	291	292	293	296	301	304	306	309	310	311	312	314
R677	244	245	246	247	250	251	252	255	257	259	260	262	264	266	268	269	270	272	273	274	275	276	278	280
R678	265	266	270	272	274	275	276	277	278	279	281	282	286	287	289	292	293	295	298	299	304	308	309	311
R679	268	269	270	271	273	279	286	287	289	291	293	295	297	298	299	302	303	304	307	309	310	314	317	323
R680	273	274	276	278	279	280	283	284	287	289	290	291	293	295	299	301	306	307	317	321	322	323	324	
R681	247	249	250	251	252	254	255	257	258	259	262	263	264	266	267	269	271	273	277	279	280	281	282	284
R682	236	238	239	240	243	244	247	248	250	252	254	257	258	259	260	262	263	264	267	268	270	273	275	279
R683	303	304	305	306	307	308	309	310	311	313	314	315	317	318	320	321	325							
R684	310	313	316	317	318	319	321	322	324															
R685	282	284	286	289	290	291	293	295	296	297	303	305	306	312	315	316	317	320	321	323	325			
R686	264	267	270	272	274	276	277	278	281	284	285	286	290	293	294	296	297	300	301	302	308	310	312	314
R687	252	253	254	255	262	264	266	271	272	273	274	275	276	277	278	279	281	285	286	288	291	293	295	296
R688	315	316	320	323	324																			
R689	268	270	272	274	276	278	282	283	285	286	292	300	302	303	305	306	310	311	314	315	316	317	318	320
R690	248	251	254	256	258	260	261	262	264	265	266	268	269	273	274	275	278	281	282	283	284	286	289	291
R691	251	252	253	254	259	260	261	265	266	269	270	271	272	274	275	276	277	278	283	285	286	289	290	294
R692	262	263	264	266	267	268	270	273	277	280	282	283	285	286	287	288	289	290	291	292	294	295	300	301
R693	250	251	252	256	258	259	260	265	266	267	268	269	271	273	280	281	282	290	292	294	296	297	299	301
R694	236	240	241	244	245	248	250	251	254	255	257	258	261	263	264	265	266	269	273	275	279	283	284	288
R695	272	273	274	275	276	278	282	283	284	290	291	292	294	296	299	301	302	303	304	306	308	309	310	312
R696	267	273	275	279	280	281	283	285	289	290	291	292	294	295	298	301	303	304	305	306	310	311	314	315
R697	273	274	276	278	279	281	283	284	285	288	292	294	295	297	298	300	302	303	305	309	311	313	314	318
R698	274	276	278	279	280	282	285	289	291	292	293	295	297	298	299	300	302	305	306	307	308	316	318	320
R699	263	264	265	266	270	271	272	273	274	276	278	280	286	288	290	291	293	294	295	297	298	301	302	303
R700	267	272	273	274	276	278	279	281	283	285	286	287	289	290	291	293	294	295	296	297	299	300	301	304
R701	262	264	267	271	272	274	276	277	278	279	283	284	290	292	295	296	297	299	301	306	307	308	309	311
R702	298	299	300	301	303	308	309	312	313	315	316	318	319	321	325									
R703	285	286	287	290	292	294	296	297	299	300	301	302	303	304	311	313	314	316	322	323	325			
R704	255	256	258	261	262	265	269	270	271	272	273	274	276	277	278	279	281	282	283	289	290	291	296	298
R705	255	257	261	262	263	268	271	272	273	274	276	277	278	279	281	285	286	288	292	294	295	296	297	302
R706	297	301	302	304	307	310	311	312	313	316	317	318	320	321	322	324	325							
R707	290	293	295	300	303	304	306	307	309	313	316	319	320	321	325									
R708	237	239	240	241	242	247	248	251	252	258	261	265	266	268	270	271	280	283	286	288	293	294	295	297
R709	303	310	311	314	323	324	325																	
R710	267	272	273	274	275	276	277	278	279	280	282	283	284	290	295	296	299	300	302	303	307	310	311	313
R711	278	279	281	282	286	287	289	290	291	296	298	299	300	301	307	308	309	310	313	314	316	318	319	323
R712	234	237	238	242	244	245	246	250	253	256	258	259	260	261	263	264	265	266	267	269	270	271	272	274
R713	276	277	278	279	280	281	283	284	287	288	289	290	292	297	298	306	307	308	312	315	316	317	321	322
R714	254	255	257	260	261	262	263	264	266	267	268	271	273	279	281	282	283	286	288	292	293	296	300	301
R715	256	258	266	268	271	273	277	278	279	281	282	284	285	286	287	289	290	292	294	295	296	297	302	305
R716	231	232	233	236	238	241	242	243	244	245	246	247	248	250	252	254	255	259	260	261	263	264	265	266
R717	298	302	304	306	307	308	309	310	311	312	314	317	319	320	324									
R718	266	267	268	269	270	276	277	279	281	282	288	292	295	296	297	298	299	304	313	315	319	323	324	
R719	290	291	292	298	299	301	302	304	305	308	309	310	311	312	313	314	316	318	319	322	323	324	325	
R720	256	258	259	260	263	264	265	266	267	269	270	271	272	274	276	277	278	279	281	282	283	285	286	287

Copyright © 2005 IEEE. All rights reserved.
This is an unapproved draft, subject to change

Table 55A–3—P matrix: location 49 to 72

	C49	C50	C51	C52	C53	C54	C55	C56	C57	C58	C59	C60	C61	C62	C63	C64	C65	C66	C67	C68	C69	C70	C71	C72
R721	240	241	243	244	245	248	250	251	252	253	255	257	259	260	262	265	266	268	275	277	281	283	285	287
R722	266	269	272	273	274	275	276	277	278	279	280	281	282	284	285	286	287	288	289	290	291	292	295	296
R723	296	297	299	301	304	308	312	315	318	320	323	324	325											
R724	305	306	309	310	311	314	315	316	317	320	325													
R725	282	283	284	285	286	289	292	293	294	298	299	304	305	307	308	310	312	313	315	317	319	320	321	322
R726	262	263	269	272	274	275	276	278	281	282	283	286	293	294	295	298	299	300	302	303	305	307	308	309
R727	255	257	261	262	263	264	265	266	268	269	273	280	281	282	283	284	286	290	291	294	295	296	299	300
R728	273	274	275	276	277	278	282	283	285	287	289	292	293	299	301	303	305	306	307	308	310	312	315	316
R729	310	312	316	318	319																			
R730	259	263	266	268	270	272	274	276	278	279	281	282	286	287	289	290	296	301	302	306	307	308	310	312
R731	302	303	304	306	307	311	312	313	314	319	321	322	323											
R732	237	238	243	244	246	247	248	251	252	253	256	257	258	262	264	266	268	270	271	275	278	281	282	284
R733	269	270	273	275	279	281	283	284	286	287	288	290	291	293	297	301	304	305	306	307	309	310	312	314
R734	296	297	298	300	302	304	305	307	309	313	315	316	318	319	320	321	324							
R735	311	313	314	315	317	318	321	324	325															
R736	265	266	268	269	271	273	275	277	279	283	288	289	290	292	293	296	297	299	301	303	304	305	306	307
R737	248	252	253	256	258	261	262	263	266	269	271	273	275	277	279	281	284	286	287	294	295	297	299	300
R738	239	241	243	245	246	247	252	253	254	255	262	265	266	267	268	271	273	275	277	279	280	282	283	285
R739	280	281	282	284	285	287	288	293	294	297	298	300	301	302	303	316	318	322	323					
R740	229	230	234	238	239	241	242	247	252	253	254	255	256	257	260	262	265	266	267	269	272	273	274	275
R741	273	274	275	276	278	280	283	284	287	289	292	293	298	299	305	306	307	308	313	314	315	321	322	324
R742	247	250	252	255	257	259	260	261	262	264	266	269	270	277	279	282	283	285	287	292	294	295	296	297
R743	272	273	274	275	276	277	278	280	281	282	284	285	286	288	289	291	292	293	295	296	300	301	303	306
R744	292	293	294	295	296	299	300	301	305	306	307	308	312	314	316	318	323							
R745	269	272	274	275	276	277	278	283	286	290	291	294	295	296	298	300	302	304	306	308	310	311	312	314
R746	274	275	276	277	278	281	283	284	285	286	287	290	291	295	296	297	298	300	302	303	305	306	308	310
R747	258	261	265	268	270	280	281	283	288	289	293	294	298	302	303	307	315	316	318	319	321	323	325	
R748	250	251	253	255	257	262	263	264	269	270	272	274	276	277	278	281	286	289	290	291	294	296	297	299
R749	251	253	254	255	256	257	258	260	262	264	265	266	267	270	271	273	275	280	283	284	285	289	290	291
R750	268	271	272	273	274	275	276	278	280	284	285	286	289	290	291	294	295	296	298	302	303	304	307	310
R751	233	234	235	237	238	239	240	241	242	243	246	248	252	258	260	263	264	266	269	270	273	275	278	282
R752	276	277	278	280	285	286	287	288	291	294	295	297	304	305	306	307	310	313	316	319	320	322	323	
R753																								
R754	280	284	286	289	292	294	295	297	298	301	302	305	306	309	310	311	312	314	316	317	319	321	324	
R755	234	237	239	241	247	252	253	255	260	261	264	265	266	269	273	275	277	279	281	282	283	284	286	288
R756	278	282	283	284	285	287	291	293	294	295	297	301	302	304	306	307	308	311	313	315	316	317	318	320
R757	289	291	294	297	300	301	302	306	308	309	310	311	312	313	318	320	321	322	325					
R758	245	247	249	256	257	261	265	269	273	277	280	282	284	285	290	292	293	294	296	297	299	300	301	305
R759	262	264	269	270	275	277	279	280	281	282	283	285	286	288	291	293	294	295	298	303	308	310	313	315
R760	280	281	284	285	286	287	288	290	291	292	293	294	301	303	304	308	309	310	317	319	320	321	322	323
R761	287	293	294	295	296	302	303	304	307	308	309	310	311	312	316	321	325							
R762	266	268	269	270	272	274	275	276	277	278	279	283	288	291	292	294	295	296	297	298	299	300	302	303
R763	259	261	262	264	268	270	271	272	273	276	277	280	285	288	289	290	291	292	293	294	295	301	302	303
R764	276	278	279	280	283	284	285	287	289	291	292	295	296	297	301	302	304	305	307	310	315	316	318	319
R765	288	292	293	294	295	296	298	299	300	302	304	305	309	310	315	317	320	321	322	323	324			
R766	270	273	277	280	281	283	284	285	286	287	288	291	292	294	298	301	302	306	307	309	311	312	315	317
R767	268	269	270	273	284	286	289	291	292	294	295	296	297	298	299	300	302	304	306	307	311	313	314	316
R768	239	240	245	251	254	259	261	262	263	264	267	268	270	271	273	275	277	279	281	283	284	285	286	295
R769	294	299	300	302	304	307	310	311	313	314	315	316	318	319	325									
R770	247	248	254	257	262	263	267	269	271	273	282	283	286	289	291	292	293	294	296	297	300	301	303	304
R771	279	280	284	287	289	290	292	294	295	296	297	299	300	301	303	304	305	306	307	308	309	314	318	319
R772	251	252	253	257	259	260	262	266	269	270	271	275	277	279	280	282	283	287	292	293	294	295	296	298
R773	252	254	256	258	260	263	264	266	267	268	270	272	273	274	275	276	278	279	282	283	285	287	290	294
R774	268	270	271	272	273	274	276	277	278	280	284	285	287	288	289	292	296	299	302	304	305	306	307	310
R775	289	290	294	299	300	302	305	306	307	318	322	324	325											
R776	299	301	302	304	308	309	310	316	318	321	323													
R777	266	267	268	270	271	272	273	274	276	278	279	280	282	284	286	288	289	290	292	294	297	299	301	302
R778	280	284	285	288	289	291	293	295	296	297	299	300	301	305	306	307	308	311	312	314	317	318	319	321
R779	250	251	254	256	258	259	260	266	268	271	272	273	274	278	282	283	286	290	291	292	294	295	296	297
R780	226	227	232	234	237	240	241	242	243	244	246	253	255	259	262	263	264	268	270	272	273	274	276	277

Copyright © 2005 IEEE. All rights reserved.
This is an unapproved draft, subject to change

Table 55A–3—P matrix: location 49 to 72

	C49	C50	C51	C52	C53	C54	C55	C56	C57	C58	C59	C60	C61	C62	C63	C64	C65	C66	C67	C68	C69	C70	C71	C72
R781	262	265	266	272	273	274	276	277	278	279	282	283	285	289	291	293	295	302	305	306	310	311	313	314
R782	270	279	284	286	290	291	292	295	297	298	302	305	306	316	318	322	324							
R783	238	239	240	244	245	246	248	249	250	251	252	253	254	256	258	261	263	264	272	273	274	275	276	278
R784	300	303	304	305	311	312	316	317	320	322	323													
R785	234	235	236	237	238	239	240	245	246	247	248	249	250	256	257	258	259	262	263	264	265	269	270	271
R786	288	289	291	293	294	295	297	299	300	301	304	305	306	308	312	317	318	320	321	323	325			
R787	271	272	274	275	276	277	278	280	281	286	287	288	291	294	295	298	302	304	305	307	308	310	312	314
R788	257	259	260	261	262	263	266	267	268	269	272	274	275	276	278	279	280	284	286	288	292	294	295	296
R789	284	285	286	291	293	294	295	296	297	306	310	311	314	316	319	320	322							
R790	250	252	253	255	256	258	259	260	263	265	266	267	268	269	271	272	273	274	276	277	278	279	280	283
R791	260	265	266	268	277	279	282	283	285	286	287	288	290	291	293	294	295	297	299	300	301	303	304	305
R792	252	253	254	255	256	257	258	262	263	264	265	267	269	270	271	272	274	276	277	278	279	280	281	283
R793	261	264	266	269	273	275	280	281	282	284	285	286	287	289	290	292	299	300	302	305	306	308	310	311
R794	249	251	252	253	254	255	256	257	258	259	260	262	265	266	267	270	272	273	274	275	276	277	278	282
R795	254	256	258	260	261	264	265	266	268	277	282	284	290	291	293	294	296	297	298	299	300	303	304	305
R796	259	260	263	265	271	272	274	276	278	280	281	283	284	285	286	287	290	291	292	294	296	299	300	304
R797	264	268	269	270	273	275	279	280	285	290	291	292	293	295	296	298	299	300	301	302	303	304	306	308
R798	266	267	268	274	275	278	279	280	283	284	285	287	288	289	291	294	295	297	298	300	301	302	303	304
R799	284	286	290	291	292	294	296	297	300	301	302	303	304	305	308	309	311	312	314	316	319	320	323	324
R800	268	269	272	273	274	275	276	278	279	280	282	283	284	290	292	293	294	295	296	298	299	300	302	304
R801	267	268	271	272	273	274	276	278	281	282	288	293	295	296	299	300	303	304	307	309	316	317	318	319
R802	244	248	249	250	254	255	256	258	259	260	261	265	266	267	269	272	274	276	277	280	281	283	288	291
R803	281	283	285	287	288	290	291	292	294	295	300	301	304	305	311	312	313	314	316	318	319	320	325	
R804	281	284	285	290	291	293	295	297	298	299	300	301	304	307	308	310	311	312	314	317	319	320	321	322
R805	269	273	275	277	279	280	281	282	285	286	288	291	292	293	295	296	297	300	301	302	303	304	306	310
R806	268	269	272	274	276	277	278	279	280	281	282	284	285	287	290	291	293	294	296	299	302	304	307	310
R807	269	273	275	280	282	283	286	287	289	291	293	295	298	299	301	303	307	308	311	312	313	316	325	
R808	241	243	244	246	247	248	249	250	251	252	253	257	259	261	262	268	270	271	272	273	274	276	278	279
R809	263	265	266	269	270	275	277	279	280	281	283	288	290	291	293	294	298	299	302	305	307	308	309	310
R810	243	244	245	253	255	257	269	270	271	275	277	279	280	281	283	285	286	290	291	292	293	294	297	300
R811	246	247	248	250	255	259	260	261	263	269	272	273	274	276	277	278	279	280	281	283	284	286	289	290
R812	277	280	281	282	285	287	288	290	291	292	296	297	298	301	305	306	310	313	314	315	317	318	319	320
R813	282	283	284	289	292	293	294	296	298	299	300	302	304	305	306	307	308	310	311	314	321	322	323	
R814	273	275	279	280	284	285	286	287	289	292	294	295	296	299	301	302	304	309	310	311	312	313	314	319
R815	229	230	233	235	240	241	242	243	244	245	246	248	249	252	255	257	258	259	260	262	264	265	266	267
R816	277	279	286	292	294	296	297	298	301	302	303	304	308	313	314	315	316	319	320	322	325			
R817	237	239	242	248	251	253	255	256	258	259	261	262	265	266	269	271	277	280	282	284	285	286	287	289
R818	256	257	258	260	262	269	270	271	272	273	274	276	277	278	279	282	283	286	288	290	293	296	297	298
R819	238	240	241	242	245	246	248	249	254	255	256	258	260	261	262	264	265	268	270	271	273	279	280	283
R820	284	285	286	288	290	291	294	297	299	303	304	308	309	311	313	314	316	317	319	320	322	323	324	
R821	284	285	286	287	289	290	300	301	303	305	306	308	310	311	312	313	314	315	316	319	320	323	324	
R822	280	281	282	287	289	291	292	299	302	303	306	307	309	310	313	316	319	323	325					
R823	279	280	282	285	287	288	291	295	296	297	299	303	304	309	310	316	317	319	321					
R824	257	258	262	264	267	269	270	277	279	284	288	291	293	294	297	298	300	301	303	307	309	315	321	322
R825	251	253	254	255	256	257	258	260	261	262	263	267	268	271	272	274	275	276	278	279	280	281	283	284
R826	314	317	320	321	324																			
R827																								
R828	307	309	311	312	314	316	317	319	320	321	323													
R829	302	303	304	306	309	310	311	313	314	316	317	318	321	322	324									
R830	279	280	281	283	285	287	289	290	291	292	294	296	298	303	304	305	307	309	310	315	316	317	321	322
R831	276	277	278	279	281	283	284	286	289	291	292	295	298	300	303	305	306	307	308	310	311	314	316	318
R832	294	295	297	301	302	305	308	309	311	313	314	315	319	320	321	322	323	324	325					
R833	259	261	262	263	264	266	275	277	282	283	284	287	289	293	296	297	301	303	305	308	309	310	313	316
R834	293	297	303	304	306	309	310	312	313	316	318	319	320	323	324									
R835	279	281	282	284	285	286	288	289	290	292	293	295	298	299	301	302	306	307	309	310	313	315	316	320
R836	238	243	245	246	247	252	253	259	264	267	268	272	274	276	277	280	281	283	285	288	290	292	293	294
R837	254	255	256	257	258	261	263	265	266	269	270	272	274	275	276	278	283	288	289	291	294	295	296	297
R838	252	253	254	256	257	258	259	261	262	263	265	266	269	270	272	273	274	275	276	278	279	283	284	286
R839	279	280	284	285	287	288	289	290	291	294	297	305	306	307	309	312	313	315	316	318	319	320	322	323
R840	320	321	324																					

Copyright © 2005 IEEE. All rights reserved.
This is an unapproved draft, subject to change

Table 55A–3—P matrix: location 49 to 72

	C49	C50	C51	C52	C53	C54	C55	C56	C57	C58	C59	C60	C61	C62	C63	C64	C65	C66	C67	C68	C69	C70	C71	C72
R841	265	266	267	268	270	272	273	274	275	276	277	278	279	282	284	285	287	288	292	294	295	297	298	300
R842	269	270	272	273	274	275	276	278	279	280	281	282	285	286	287	288	292	294	295	296	298	300	302	304
R843	253	255	256	257	258	259	260	261	262	263	264	267	268	270	271	275	280	281	284	289	290	291	292	293
R844	263	265	266	267	268	272	274	275	276	277	278	281	282	284	285	287	288	289	293	295	296	297	298	301
R845	320	321	323	324	325																			
R846	256	259	263	265	266	269	281	286	289	296	297	298	299	301	304	307	308	310	311	313	314	316	318	321
R847	227	229	231	232	235	236	237	239	242	246	251	253	254	255	256	258	260	261	263	264	267	268	270	272
R848	249	251	252	253	255	257	260	262	264	268	269	270	272	273	274	276	278	280	285	287	288	290	292	295
R849	283	284	285	286	287	288	289	291	294	297	298	299	302	303	304	306	307	309	314	315	317	318	319	320
R850	297	298	299	303	305	309	312	315	316	317	319	320	323											
R851	245	252	253	254	260	261	268	271	272	274	275	276	278	282	288	290	291	295	296	298	300	302	304	307
R852	276	279	281	285	287	288	289	290	296	297	302	307	308	311	315	317	318							
R853	261	262	267	268	270	277	281	282	283	284	285	288	293	294	295	297	302	304	305	306	308	309	310	312
R854	276	277	278	280	284	285	287	288	291	295	296	297	298	301	305	307	308	311	313	314	319	320	322	
R855	264	267	269	270	271	272	276	279	281	283	284	287	290	291	294	296	297	298	300	302	303	305	307	309
R856	249	250	251	252	253	254	256	259	262	263	265	266	267	268	271	272	273	274	276	278	279	280	283	285
R857	273	275	277	280	282	283	284	285	286	287	290	294	296	299	300	302	303	304	306	307	308	310	311	312
R858	283	284	286	288	290	291	294	299	301	302	303	306	313	316	320	323	325							
R859	229	230	231	232	233	235	236	239	242	243	244	245	247	249	251	254	255	256	257	260	262	265	267	277
R860	251	254	260	261	263	264	268	269	270	271	272	273	274	275	276	278	280	282	284	286	287	288	290	293
R861	299	302	304	305	306	311	312	313	314	315	318	319	320	321	323	324	325							
R862	258	259	260	262	263	264	265	267	268	271	272	274	276	277	278	279	282	283	285	287	291	292	295	305
R863	291	292	293	295	296	298	301	304	306	308	311	313	314	317	319	324	325							
R864	259	260	261	262	265	268	270	272	274	275	276	277	278	279	283	284	285	286	287	289	290	291	292	293
R865	273	274	276	277	278	281	282	284	286	287	288	293	295	301	305	307	308	309	310	311	312	313	314	315
R866	273	275	281	282	283	284	285	286	287	288	290	291	292	293	294	298	301	302	303	304	305	307	310	311
R867	303	304	305	306	308	309	310	315	319	324	325													
R868	234	236	238	239	241	242	246	247	248	249	252	254	255	256	257	258	260	262	263	264	266	268	270	271
R869	251	254	255	257	259	261	262	265	267	268	271	272	273	274	275	276	277	278	281	282	284	286	290	291
R870	262	263	267	269	271	273	275	277	279	282	283	285	287	290	291	292	293	300	301	304	305	307	308	310
R871	296	297	298	299	300	302	303	304	305	308	310	311	313	314	315	316	317	318	319	322	323			
R872	232	235	236	238	239	240	241	247	248	250	252	253	254	258	259	260	262	265	266	267	269	271	272	273
R873	265	268	269	272	273	274	275	276	277	278	282	285	292	297	298	299	300	303	304	305	310	315	319	320
R874	280	281	285	289	290	292	303	305	306	317	320	322	324											
R875	276	277	278	279	281	283	285	286	287	288	289	290	291	292	295	296	297	298	299	301	302	303	304	308
R876	270	271	272	273	274	275	276	277	278	279	281	284	288	289	290	291	293	298	300	302	306	307	308	309
R877	250	251	253	254	256	258	259	260	261	264	267	268	273	275	280	281	282	284	285	286	287	290	292	294
R878	276	277	279	280	282	283	286	291	297	298	300	301	302	303	304	305	308	312	313	316	317	318	321	323
R879	276	278	279	282	285	287	288	292	294	296	298	299	307	310	313	319	321	322	323					
R880	292	294	299	300	301	303	306	307	310	311	312	313	314	320	321	322	325							
R881																								
R882	295	296	298	300	302	309	315	318	319	322	323													
R883	241	242	244	250	254	255	258	261	263	265	266	269	271	272	273	274	276	277	278	280	282	285	287	289
R884																								
R885	271	272	274	275	276	278	280	281	284	286	287	288	290	291	293	295	296	298	299	300	301	302	303	307
R886	283	284	290	295	296	297	299	300	304	307	309	312	316	318	320	321	322	323	325					
R887	247	249	251	255	256	257	258	259	262	264	265	266	267	268	269	275	279	280	282	291	297	298	302	307
R888	270	271	272	273	274	275	276	278	279	280	282	285	286	287	288	290	291	293	294	297	298	300	303	304
R889	295	301	302	304	306	310	312	313	315	317	318	319	320	322	324									
R890	287	289	297	300	301	302	306	307	310	312	313	314	316	320	323									
R891	251	253	254	255	256	258	259	260	261	269	272	274	275	276	277	278	279	283	285	286	287	289	295	296
R892	291	295	299	301	302	303	304	305	306	318	323													
R893	289	293	294	295	297	298	300	302	304	306	310	315	321											
R894	291	294	296	299	300	301	304	306	307	308	309	310	311	313	314	316	317	319	322	323	324			
R895	269	271	272	273	274	276	277	278	279	280	281	283	285	286	292	300	305	306	311	312	314	315	316	319
R896	252	255	256	258	260	264	265	266	267	270	271	272	274	275	276	278	279	280	281	282	283	284	285	286
R897	247	250	251	252	253	254	255	259	260	263	264	265	266	267	268	270	273	277	279	281	283	284	285	288
R898	265	270	275	277	278	279	280	284	286	289	290	291	292	293	297	300	301	303	304	305	306	313	315	316
R899	238	241	242	246	247	252	253	254	256	258	260	267	270	271	273	275	280	281	282	283	285	286	287	288
R900	278	279	281	282	284	285	286	287	288	291	293	294	298	299	300	303	305	306	307	309	311	313	314	316

Copyright © 2005 IEEE. All rights reserved.
This is an unapproved draft, subject to change

Table 55A–3—P matrix: location 49 to 72

	C49	C50	C51	C52	C53	C54	C55	C56	C57	C58	C59	C60	C61	C62	C63	C64	C65	C66	C67	C68	C69	C70	C71	C72
R901	266	267	269	270	271	272	273	274	275	276	278	280	282	283	285	286	289	290	293	294	295	296	297	298
R902	260	262	265	266	267	270	272	274	276	277	278	279	282	283	285	288	289	293	295	296	298	299	301	302
R903	223	225	227	233	234	239	241	243	246	247	248	252	254	255	257	258	260	262	264	268	270	271	275	277
R904	288	291	293	294	295	297	300	301	302	304	305	306	307	308	310	311	314	316	319	320	323			
R905	255	256	257	258	260	262	263	264	265	266	269	272	274	275	276	277	278	279	280	283	291	292	297	300
R906	270	272	273	274	276	277	278	283	291	294	295	296	298	299	304	305	310	312	313	314	318	321	323	324
R907	250	251	252	253	255	257	261	263	267	270	279	281	282	283	284	286	288	289	290	291	292	293	294	295
R908	312	317	320	321	322	324	325																	
R909	250	251	254	255	261	263	264	266	267	268	271	275	279	280	283	285	286	287	288	290	291	298	299	300
R910	234	235	236	237	238	240	242	243	244	250	252	254	255	256	257	258	259	264	267	269	270	271	273	277
R911	252	253	254	257	261	262	269	270	272	273	274	276	278	281	283	284	286	287	291	293	294	296	297	298
R912	297	298	301	304	306	310	313	319	321	322	323	324	325											
R913	256	257	258	259	261	264	267	268	269	271	272	273	274	276	278	279	280	281	284	286	289	291	292	293
R914	256	258	260	261	264	266	271	272	273	274	278	279	284	285	288	289	290	295	296	299	300	306	309	311
R915	266	269	271	280	281	282	284	288	290	295	296	297	300	305	306	308	309	311	313	314	316	318	319	321
R916	306	312	313	317	321	323	324																	
R917	300	301	302	303	304	307	309	310	312	313	316	317	321	322	325									
R918	254	256	257	258	261	262	265	266	267	269	271	273	275	277	281	284	285	286	287	290	296	297	298	299
R919	261	264	265	268	269	270	273	275	277	280	283	285	286	287	288	293	294	298	301	302	311	313	314	315
R920	254	256	257	258	260	261	262	264	269	271	272	273	274	276	277	278	279	285	286	288	289	290	291	292
R921	279	282	287	289	290	295	298	300	305	307	308	309	318	320	321	324	325							
R922	273	274	275	276	277	278	282	284	286	288	290	291	292	294	296	297	298	301	302	304	307	308	309	310
R923	259	260	262	263	264	267	269	271	273	275	277	279	280	281	283	285	288	292	293	294	296	297	299	301
R924	288	289	291	293	294	295	297	300	302	304	305	306	307	315	317	318	319	322	323	324	325			
R925	270	277	279	280	281	292	293	294	296	302	303	304	307	311	312	313	315	316	318	320	321	322	323	
R926	267	271	273	281	282	284	285	288	293	296	297	299	300	301	304	306	307	312	314	315	316	318	320	323
R927																								
R928	266	267	268	270	274	278	280	283	285	287	288	289	290	293	296	298	306	311	315	316	319	320	321	322
R929	316	320	325																					
R930	261	262	263	264	265	266	269	270	271	273	275	277	280	282	283	284	286	287	289	290	291	293	295	296
R931	272	273	274	276	278	280	282	288	290	291	292	293	294	296	297	298	300	302	309	311	312	314	316	318
R932	272	274	276	277	278	281	282	289	291	296	297	298	303	304	305	307	308	309	310	312	313	314	316	317
R933	288	293	295	296	298	300	302	306	308	309	310	311	314	317	319	322	323							
R934	250	252	256	257	258	260	262	263	268	270	271	272	273	274	276	277	279	280	281	284	286	291	293	295
R935	311	314	316	319	323																			
R936																								
R937	287	288	290	292	293	294	295	297	299	300	301	302	303	307	309	310	312	313	315	318	319	322	324	
R938	275	276	277	278	279	280	286	287	292	295	296	297	299	304	306	307	308	309	311	312	313	314	315	317
R939	276	277	278	279	280	281	284	285	287	289	290	293	294	295	300	302	303	304	306	307	308	309	310	311
R940	267	271	275	280	281	287	289	291	292	293	296	297	298	303	304	305	306	307	311	316	317	318	319	320
R941	256	258	259	262	263	264	266	267	275	280	282	283	285	289	290	303	308	310	313	315	317	318	319	320
R942	248	251	252	254	255	257	259	260	262	266	267	269	273	275	280	283	285	286	288	289	293	295	296	299
R943																								
R944	272	273	274	276	279	280	281	282	284	285	287	290	291	293	297	298	299	302	306	307	308	309	311	313
R945	275	280	281	283	285	288	290	292	293	295	298	300	303	304	305	309	310	312	314	322	324			
R946	274	276	277	278	279	280	282	283	285	287	290	291	293	294	296	298	299	300	301	304	308	309	311	314
R947	285	287	289	290	291	292	297	298	299	301	306	307	309	319	320	321	322	323	325					
R948	247	248	252	254	257	261	262	264	265	268	270	271	273	277	284	286	288	289	290	291	294	298	299	304
R949	250	251	252	253	256	258	259	264	265	266	267	268	271	272	273	274	276	277	278	279	282	283	286	288
R950	258	259	260	262	268	269	271	272	273	274	276	278	279	280	281	282	283	284	286	289	293	294	296	298
R951	232	235	236	237	239	241	242	243	246	248	249	250	251	253	257	261	263	264	265	266	267	269	270	272
R952	252	253	255	257	258	259	260	262	264	266	268	269	270	271	275	279	282	283	284	286	287	289	291	292
R953	270	271	272	273	274	275	276	277	278	284	285	286	287	290	293	294	295	296	297	298	300	301	303	307
R954	311	313	314	315	316	318	319	321	323															
R955	269	270	272	274	275	276	278	279	280	283	284	288	289	290	292	293	295	296	297	301	304	307	309	310
R956	255	256	257	258	259	260	262	266	267	268	269	270	271	272	273	274	276	277	283	288	289	290	293	294
R957	309	311	314	318	320	321	322	324	325															
R958	279	280	281	282	283	284	285	286	287	289	293	297	301	303	310	311	312	313	314	315	316	321	322	323
R959	252	254	257	259	260	262	265	266	267	268	272	273	274	276	279	280	282	286	287	288	290	291	295	296
R960	241	243	247	248	249	250	252	253	258	259	260	263	265	268	271	279	280	283	286	287	288	289	290	291

Copyright © 2005 IEEE. All rights reserved.
This is an unapproved draft, subject to change

Table 55A–3—P matrix: location 49 to 72

	C49	C50	C51	C52	C53	C54	C55	C56	C57	C58	C59	C60	C61	C62	C63	C64	C65	C66	C67	C68	C69	C70	C71	C72
R961	274	276	277	278	280	281	282	283	284	285	287	289	290	293	297	299	303	304	306	310	311	314	317	319
R962	240	241	245	246	247	248	255	259	261	263	264	265	266	267	268	272	273	274	275	276	278	280	281	284
R963	296	299	302	303	304	306	309	310	311	312	314	319	321	322	324									
R964	247	248	250	252	254	255	260	263	264	269	277	281	282	283	284	286	298	299	300	301	302	303	306	307
R965	238	248	249	251	253	256	258	259	260	261	262	265	266	269	270	271	273	279	280	285	286	287	288	289
R966	255	257	259	262	264	267	269	277	279	280	281	283	285	286	288	290	292	293	294	295	296	297	300	302
R967	283	286	288	292	293	294	295	298	299	301	303	304	308	309	310	311	313	314	316	318	320	321	323	
R968	261	263	267	268	269	272	274	275	276	277	278	281	282	285	287	288	289	290	291	292	295	296	302	303
R969	267	268	269	272	274	275	276	278	279	280	281	283	286	287	288	291	292	293	294	297	298	299	304	305
R970	304	308	310	312	313	315	316	318	319	320	321	322	324											
R971	247	248	249	251	254	255	256	258	260	261	263	264	265	266	267	269	270	271	275	277	281	282	284	286
R972	247	248	252	253	260	261	264	269	270	275	279	281	282	290	291	292	293	299	301	302	304	305	307	309
R973	262	266	268	270	272	274	276	278	279	281	282	283	284	286	289	291	294	296	297	299	301	302	303	304
R974	245	246	253	255	265	266	267	268	269	271	275	277	280	281	282	283	288	290	292	293	294	295	297	300
R975	283	285	286	289	290	294	295	296	299	302	303	305	306	308	309	311	315	316	319	324	325			
R976	281	285	287	290	293	294	295	296	297	298	300	302	303	306	308	309	310	311	312	314	315	318	320	321
R977	240	244	250	255	256	258	260	263	269	270	271	279	281	284	286	290	291	292	294	295	296	297	304	306
R978	229	231	233	237	239	241	242	243	244	245	246	247	250	251	252	253	255	257	259	261	263	264	265	266
R979	298	299	301	309	310	316	317	318	319	320	323													
R980	267	268	270	272	273	274	275	276	277	278	279	281	282	283	285	289	290	291	294	295	297	299	301	303
R981	259	260	261	262	263	264	265	266	268	269	270	271	272	273	274	276	278	280	281	282	286	290	293	295
R982	252	253	254	256	258	259	263	266	268	270	272	274	275	276	277	278	280	284	285	286	287	288	289	293
R983	298	299	305	306	307	308	309	312	313	315	317	318	320	323	325									
R984	240	241	245	247	248	249	255	256	258	259	261	267	269	270	277	280	286	287	289	293	297	302	307	308
R985	251	252	257	259	262	264	265	266	267	270	272	273	274	276	277	278	279	280	282	283	286	290	292	295
R986	243	246	247	248	252	253	254	255	256	258	260	261	264	265	269	270	273	275	281	282	284	285	286	289
R987	268	269	275	277	279	281	282	286	289	295	299	300	301	307	309	310	311	314	315	320	324			
R988	269	270	272	273	274	275	276	278	279	280	283	285	286	287	290	295	298	299	301	302	307	308	310	312
R989	247	248	249	253	254	256	257	258	262	263	264	266	269	270	272	273	274	276	278	279	280	281	282	283
R990	293	299	301	303	306	307	309	313	319															
R991	264	265	266	267	269	272	276	279	282	283	285	286	289	291	293	294	295	297	298	299	304	306	310	311
R992	290	293	294	297	299	302	303	305	309	310	312	313	314	318	320	321	322	324	325					
R993	275	276	277	278	279	281	282	283	286	288	292	293	296	297	299	301	303	305	314	318	320	323	324	
R994	294	296	297	298	299	300	301	303	304	305	306	310	311	312	313	316	320	321	324					
R995	248	250	254	256	258	259	261	266	268	270	271	272	273	274	276	278	279	280	281	282	283	288	289	291
R996	305	309	311	312	313	315	317	319	320	323	325													
R997	280	281	282	283	284	285	287	291	292	293	295	297	298	305	311	312	313	315	317	319	322	323	325	
R998	253	256	257	258	262	263	268	269	272	273	274	275	276	278	279	280	282	283	286	289	292	294	295	296
R999	251	253	254	255	256	257	258	259	261	262	264	265	267	268	270	271	272	273	274	275	276	278	279	281
R1000	245	246	249	251	252	253	254	255	256	257	258	261	265	266	267	268	270	272	274	275	276	279	280	283
R1001	269	271	273	275	279	280	281	285	286	287	288	292	294	295	298	299	301	309	310	312	313	315	321	323
R1002	250	252	254	259	260	263	269	270	275	277	279	283	285	286	287	288	289	290	292	294	295	297	299	305
R1003	257	260	261	262	265	267	270	271	275	277	279	282	283	284	285	287	290	293	294	295	296	297	304	305
R1004	296	298	299	300	305	306	307	308	312	313	315	316	317	319	320	321	322	323	325					
R1005	277	279	281	282	284	285	286	287	292	298	305	307	308	312	313	314	321	323	325					
R1006	242	244	246	247	248	249	250	252	253	256	257	258	262	264	266	271	272	274	275	276	277	278	279	280
R1007	287	292	293	294	295	296	297	299	300	304	305	308	309	313	315	316	319	322	323	324	325			
R1008	259	261	266	269	271	272	273	274	276	277	278	280	281	282	284	286	288	293	294	295	298	299	300	301
R1009	298	299	300	306	307	308	311	312	313	318	319	320	325											
R1010	263	264	265	266	267	269	275	280	282	284	285	286	287	288	290	291	292	293	294	295	298	301	305	306
R1011	251	252	256	257	258	259	261	262	264	265	266	268	270	272	273	274	276	278	281	282	283	284	286	291
R1012	281	282	285	286	290	291	293	295	299	300	301	302	305	306	307	312	313	315	317	319	320	323	325	
R1013	254	256	257	258	259	260	261	262	266	268	269	272	274	276	278	281	282	283	286	292	293	296	299	300
R1014	240	241	243	246	249	252	254	255	259	260	261	262	264	265	266	267	268	270	271	272	273	274	276	278
R1015	304	305	308	309	310	311	315	316	321	322	323	324	325											
R1016	243	246	247	251	252	255	257	258	260	261	262	265	266	268	271	272	274	276	277	278	281	284	288	290
R1017	254	255	260	261	264	268	275	277	278	279	281	282	284	285	286	287	288	293	297	301	302	304	311	312
R1018	258	259	261	263	265	266	267	268	272	274	276	277	278	283	287	289	290	291	297	298	300	301	303	306
R1019	279	280	281	283	284	285	287	289	290	294	295	296	297	298	299	301	302	303	305	309	310	313	317	321
R1020	265	268	270	271	273	277	279	280	281	282	285	286	288	290	291	292	296	301	302	303	305	307	308	309

Copyright © 2005 IEEE. All rights reserved.
This is an unapproved draft, subject to change

Table 55A–3—P matrix: location 49 to 72

	C49	C50	C51	C52	C53	C54	C55	C56	C57	C58	C59	C60	C61	C62	C63	C64	C65	C66	C67	C68	C69	C70	C71	C72
R1021	256	258	260	268	270	271	275	282	283	287	290	293	294	296	297	298	302	310	311	316	318	320	322	323
R1022	295	296	299	300	303	304	306	307	310	311	312	314	317	318	319	323	324							
R1023	255	256	258	259	260	265	266	268	271	272	273	274	275	276	278	280	282	283	284	286	287	289	290	291
R1024	284	285	287	289	292	293	294	295	297	298	302	306	309	314	315	316	317	319	322	324	325			
R1025	277	279	282	283	284	285	286	287	288	289	290	291	294	297	299	300	301	302	303	306	307	308	309	310
R1026	281	284	288	290	291	292	294	295	297	299	301	304	307	308	310	311	312	313	314	315	321	322	325	
R1027	267	271	275	279	280	281	282	283	286	287	289	290	291	292	294	295	298	300	303	304	305	306	307	308
R1028	285	287	288	289	293	296	297	298	300	301	302	304	306	307	310	311	312	313	314	315	317	318	320	322
R1029	261	262	266	267	271	277	282	283	284	285	286	288	289	291	292	293	294	295	296	298	304	305	311	313
R1030	285	286	287	289	290	291	295	297	301	306	308	310	311	312	313	314	316	319	321	322	324			
R1031	285	286	287	288	289	290	291	295	296	298	299	300	304	305	306	308	310	315	318	319	320	322	324	
R1032	281	282	283	284	285	286	290	291	295	297	300	307	308	310	311	313	314	315	316	317	320	321	322	323
R1033	251	252	253	254	255	257	261	262	263	266	268	273	275	282	283	284	286	287	288	289	290	291	294	298
R1034	286	288	292	293	294	298	299	301	304	305	306	310	312	313	314	316	317	319	320	322	323			
R1035	281	282	283	289	290	291	293	294	296	299	300	301	303	304	305	306	307	308	309	310	312	313	315	316
R1036	282	284	287	289	292	296	297	298	303	304	312	313	318	319	322	324	325							
R1037	275	276	277	278	282	283	284	286	289	291	292	293	294	296	297	298	299	300	304	306	307	310	311	313
R1038	260	261	266	267	268	270	273	277	283	285	287	288	290	291	294	297	300	301	305	306	307	308	309	310
R1039	284	287	292	293	294	295	296	297	298	299	300	302	304	307	308	309	310	313	314	315	319	320	323	324
R1040	282	285	288	289	290	291	296	298	299	301	304	309	312	313	316	317	318	320	322	324	325			
R1041	314	315	316	317	318	319	324																	
R1042	254	257	259	260	261	262	263	268	270	279	281	283	284	286	288	289	290	291	292	293	296	297	299	305
R1043	270	271	272	273	274	275	276	278	279	282	285	286	288	290	291	296	298	300	301	305	306	307	308	309
R1044	235	238	239	242	244	247	249	250	252	253	255	256	258	259	261	263	264	269	271	272	274	275	276	277
R1045	286	287	289	290	292	294	296	300	302	305	306	308	310	315	318	321	323	324	325					
R1046	269	270	271	272	274	276	278	279	280	282	283	284	291	295	296	297	298	299	300	301	302	304	305	310
R1047	261	275	277	281	282	283	284	287	291	292	295	296	299	300	301	305	307	308	315	316	318	319	320	321
R1048	291	292	294	296	297	302	308	309	310	311	312	314	316	318	320	324	325							
R1049	293	294	295	300	305	307	310	311	312	313	314	317	318	319	321	323	325							
R1050	269	278	282	283	285	288	291	294	297	299	300	302	303	304	307	310	312	313	314	315	317	318	319	323
R1051	268	269	270	271	277	279	280	283	284	285	289	290	292	293	296	297	300	303	305	306	308	310	312	314
R1052	272	273	274	276	278	279	280	284	290	291	293	294	295	296	297	298	299	300	301	303	304	307	316	317
R1053	287	288	289	290	291	293	296	297	299	304	305	306	307	309	312	317	318	321	323					
R1054	281	283	285	287	290	293	294	296	297	301	302	303	305	306	307	308	311	313	314	315	316	319	324	
R1055	271	273	277	279	282	283	284	286	289	292	293	294	295	296	297	298	302	307	308	309	310	312	315	319
R1056	269	270	272	273	274	276	278	281	285	288	293	294	296	299	300	301	302	303	305	307	308	309	314	315
R1057	262	263	264	266	268	270	271	272	274	275	276	277	278	282	284	288	289	291	296	298	300	301	304	305
R1058	246	247	250	251	254	255	256	257	258	259	260	262	264	268	269	272	273	274	275	276	278	280	281	282
R1059	265	271	272	274	275	276	277	278	279	280	285	287	288	289	291	292	295	296	297	301	302	304	305	306
R1060	258	259	260	262	264	269	273	274	275	277	278	279	283	285	287	288	290	291	292	295	296	302	303	304
R1061	257	261	265	266	267	268	270	271	279	280	282	283	285	287	288	289	290	293	295	296	298	300	303	307
R1062	266	271	273	278	282	286	287	290	294	297	300	306	308	312	313	314	318	319	320	322	323	324	325	
R1063	257	258	259	260	261	262	264	269	271	273	275	277	279	284	285	286	291	292	294	295	298	300	301	303
R1064	265	266	269	270	271	273	277	280	281	284	290	292	293	294	295	296	300	302	303	305	308	309	313	318
R1065	270	273	277	279	282	284	285	287	289	293	294	295	296	297	298	301	302	304	306	307	308	309	310	312
R1066	247	250	254	255	257	259	262	264	267	269	270	271	272	274	278	280	281	284	287	288	290	291	294	295
R1067	268	269	270	272	274	275	276	277	278	281	282	283	287	290	293	295	299	300	303	305	306	308	312	313
R1068	245	246	250	251	252	253	254	255	257	260	261	262	267	268	270	272	274	275	276	278	280	281	287	288
R1069	241	244	247	249	252	253	254	256	257	258	261	264	265	266	267	269	270	271	277	279	281	282	284	285
R1070	298	299	302	305	306	307	308	309	310	316	319	321	324											
R1071	267	271	272	273	274	276	278	279	281	286	288	290	291	292	296	297	298	299	300	301	309	313	314	317
R1072	253	254	259	261	264	265	267	269	270	271	272	273	274	275	276	277	278	281	285	288	292	294	295	303
R1073	266	268	269	270	273	280	285	290	292	294	296	297	298	300	302	305	306	309	311	312	314	315	318	319
R1074	275	281	282	289	290	291	292	294	295	297	298	299	300	301	302	303	305	307	308	310	311	313	314	318
R1075	312	314	315	318	323	324	325																	
R1076	261	263	266	267	269	270	272	274	275	276	278	279	281	282	283	285	286	287	288	290	297	298	299	302
R1077	237	241	243	245	248	249	251	252	253	254	257	259	260	261	265	266	269	278	280	282	283	285	287	289
R1078	266	271	274	275	277	278	280	282	283	284	289	290	294	297	300	303	304	305	312	313	315	316	317	321
R1079	258	260	261	264	267	268	271	272	274	275	276	277	278	281	283	284	285	286	287	289	290	291	292	293
R1080	293	295	301	302	303	304	306	309	310	311	313	314	315	316	318	319	321							

Copyright © 2005 IEEE. All rights reserved.
This is an unapproved draft, subject to change

Table 55A–3—P matrix: location 49 to 72

	C49	C50	C51	C52	C53	C54	C55	C56	C57	C58	C59	C60	C61	C62	C63	C64	C65	C66	C67	C68	C69	C70	C71	C72
R1081	240	241	243	244	247	248	250	253	255	257	259	262	265	266	267	269	270	273	279	280	282	283	285	286
R1082	297	298	299	301	302	303	306	308	309	311	313	314	315	316	317	318	320	324	325					
R1083	258	259	260	261	263	264	265	266	267	268	279	280	282	286	288	291	293	296	298	301	302	303	306	307
R1084	237	238	241	242	243	244	245	246	250	251	257	259	262	265	266	267	268	269	270	272	274	275	276	278
R1085	323	324	325																					
R1086	254	259	261	262	263	264	268	270	271	273	279	281	282	283	286	287	288	290	291	293	295	296	298	300
R1087	263	265	268	270	271	273	277	281	286	287	294	296	297	299	303	304	308	312	313	314	318	320	321	
R1088	262	267	269	270	271	277	279	281	282	284	289	290	291	293	294	295	296	297	298	299	300	301	303	304
R1089	268	269	277	279	282	283	285	286	287	289	292	295	296	297	300	302	303	306	307	308	311	312	313	314
R1090	284	294	295	296	297	299	300	301	302	303	304	305	307	308	309	310	311	312	313	314	318	320	324	
R1091	254	256	258	259	260	263	265	266	268	275	277	282	284	285	286	287	288	291	294	298	299	300	306	308
R1092	247	249	251	252	253	256	258	264	269	271	275	277	279	280	283	284	285	286	288	290	291	292	293	294
R1093	245	247	251	255	261	263	267	268	271	273	280	281	282	283	285	287	288	289	290	292	293	294	295	299
R1094	286	288	292	293	298	303	304	310	311	312	314	315	316	317	318	319	320	321	322	324	325			
R1095	221	226	227	229	230	233	235	237	238	240	242	243	248	249	250	251	254	255	256	257	258	260	262	264
R1096	300	301	304	305	306	307	308	309	310	311	313	314	315	317	318	320	321	322	325					
R1097	252	253	254	255	256	257	258	259	260	262	266	268	269	271	280	281	283	288	293	294	295	297	300	307
R1098	233	235	236	238	239	241	244	246	247	248	249	251	255	256	257	258	259	261	262	264	267	268	271	272
R1099	285	287	289	290	294	296	297	298	301	305	308	309	313	315	318	321	325							
R1100	252	253	254	255	256	258	260	261	262	264	265	266	268	275	277	279	281	282	284	286	289	293	295	296
R1101	257	258	259	262	264	266	267	268	270	272	274	276	277	278	279	286	289	290	292	293	294	296	298	299
R1102	248	254	255	258	259	261	263	267	268	270	271	272	274	276	277	278	279	280	286	287	291	292	293	294
R1103	262	263	265	266	267	268	269	270	273	275	277	280	282	284	288	291	292	294	297	302	306	307	309	310
R1104																								
R1105	242	246	247	251	252	254	257	258	259	260	262	263	264	269	271	273	277	279	280	281	283	284	285	288
R1106	301	302	303	305	308	309	311	314	315	316	317	319	320	321	323	324	325							
R1107	279	281	282	284	285	287	288	289	291	292	294	297	298	299	300	302	307	308	309	311	313	314	316	319
R1108	281	283	285	286	287	288	291	293	300	305	307	309	310	313	315	316	317	320	321	322	325			
R1109	269	277	278	279	282	283	284	286	289	293	294	297	298	301	302	303	306	307	308	311	312	314	315	319
R1110	238	239	240	241	243	244	245	246	250	251	252	254	256	257	258	260	261	262	265	266	267	268	271	272
R1111	288	289	291	293	295	296	297	299	300	303	306	311	312	313	315	316	317	319	320	321	323			
R1112	261	262	263	265	266	267	268	270	271	275	279	280	281	282	283	285	286	288	289	290	291	292	293	295
R1113	278	280	281	282	283	284	285	286	287	291	293	294	295	296	300	303	305	306	307	308	311	313	314	318
R1114	295	298	299	302	308	312	313	315	316															
R1115	273	289	290	292	295	297	301	302	303	305	306	307	308	309	311	315	316	318	320	321	322	323	324	
R1116	250	259	261	263	273	277	279	282	283	285	286	288	289	290	291	293	294	295	298	299	305	306	310	315
R1117	267	268	269	272	273	274	275	276	277	278	279	280	281	282	284	287	292	294	295	296	297	298	299	300
R1118	246	247	253	254	255	263	264	265	266	269	270	277	279	282	283	285	288	290	291	292	293	294	298	299
R1119	269	271	272	274	275	276	278	280	281	283	284	285	288	293	294	296	298	301	304	305	308	310	311	312
R1120	290	291	292	293	297	298	299	300	301	303	305	307	308	309	310	312	313	316	318	320	321	322	325	
R1121	235	238	241	242	243	244	246	248	252	253	254	260	261	262	264	265	271	275	279	280	281	284	285	288
R1122	280	281	287	290	292	293	294	298	301	304	311	313	314	315	317	319	320	322	325					
R1123	241	243	244	246	249	250	255	257	260	267	268	271	273	275	277	279	280	281	282	283	286	288	289	296
R1124	275	277	280	288	290	292	293	294	295	300	301	305	306	308	309	311	314	316	319	320	322	323	324	
R1125	291	293	295	296	297	299	301	302	304	305	306	308	312	313	316	317	319	321	322	324	325			
R1126	245	247	250	251	253	254	255	256	258	259	260	261	263	264	265	266	269	271	277	280	281	282	284	285
R1127	309	311	312	313	314	317	318	320	321	323	325													
R1128	235	239	240	241	243	247	248	250	251	254	255	257	259	261	263	265	271	273	275	277	280	282	283	284
R1129	273	280	282	285	287	288	289	290	291	292	293	294	295	297	299	300	301	302	303	305	306	308	312	313
R1130	265	266	267	271	272	273	274	275	276	278	279	280	281	282	283	284	286	287	288	290	292	293	296	297
R1131	285	286	290	292	295	296	298	300	303	305	306	308	309	310	311	312	313	314	316	318	319	321	322	323
R1132	292	294	296	297	301	302	304	305	306	308	309	313	316	318	319	320	323	324	325					
R1133																								
R1134	272	273	274	276	278	279	280	281	282	283	284	285	287	292	293	295	297	298	300	301	304	305	307	309
R1135	274	276	278	283	286	290	292	293	296	297	299	300	302	304	306	313	317	318	322					
R1136	281	284	285	287	290	292	293	296	297	298	299	301	302	303	305	306	307	310	313	318	319	320	322	323
R1137	259	261	262	264	265	266	267	272	274	276	278	279	281	282	283	284	285	286	289	290	291	292	295	300
R1138	258	259	260	263	265	267	270	271	272	273	274	276	277	278	280	285	286	288	289	293	294	296	299	301
R1139	275	278	279	280	285	289	290	291	293	297	298	303	304	306	308	309	310	311	318	319	320	324	325	
R1140	307	308	309	310	311	313	314	315	316	318	319	321	322	323	325									

Copyright © 2005 IEEE. All rights reserved.
This is an unapproved draft, subject to change

Table 55A–3—P matrix: location 49 to 72

	C49	C50	C51	C52	C53	C54	C55	C56	C57	C58	C59	C60	C61	C62	C63	C64	C65	C66	C67	C68	C69	C70	C71	C72
R1141	247	248	249	250	251	252	253	254	256	258	265	267	268	270	272	274	276	277	278	280	283	285	289	290
R1142	314	316	317	318	319	322	323	324	325															
R1143	300	302	304	305	310	311	312	313	315	316	317	318	319	324	325									
R1144	285	287	288	289	291	292	294	297	299	302	303	304	305	306	307	309	310	311	312	318	322	323	325	
R1145	270	271	273	279	280	281	285	287	288	290	291	294	295	297	298	300	302	303	305	307	308	311	312	314
R1146	250	251	255	257	261	263	265	266	268	270	271	275	280	281	284	286	287	288	291	292	293	294	296	300
R1147	256	258	259	264	265	269	282	283	284	286	287	288	289	290	293	294	295	297	298	301	302	303	304	305
R1148	290	291	295	296	297	301	303	304	308	310	316	320	321	324	325									
R1149	275	279	280	281	282	283	284	285	287	288	290	293	295	296	297	299	300	301	302	303	305	306	307	309
R1150	244	245	246	247	248	249	252	253	260	264	265	266	269	270	271	273	275	279	280	281	283	286	290	291
R1151	287	288	289	291	292	295	296	297	298	302	303	305	306	311	316	317	320	321	322					
R1152	245	248	249	250	251	252	254	255	256	257	258	261	262	263	264	266	267	268	270	275	281	283	284	287
R1153	254	255	256	257	258	261	263	264	269	275	279	280	282	284	285	287	289	291	293	294	298	300	301	304
R1154	291	295	296	300	301	302	303	304	307	308	309	313	314	315	316	317	319	320	323					
R1155	232	235	236	239	241	244	246	250	255	257	258	262	267	269	270	272	274	276	277	278	279	280	281	282
R1156	278	281	283	287	288	290	291	296	297	299	304	306	307	308	309	310	311	312	313	314	316	321	323	
R1157	301	304	305	307	310	311	314	315	317	319	321													
R1158	254	255	256	258	259	260	261	264	265	266	267	268	270	272	273	274	276	277	278	281	284	285	287	288
R1159	261	263	264	265	266	268	269	270	271	272	273	274	276	278	280	282	284	286	287	288	291	292	297	298
R1160	237	238	239	241	244	245	247	249	252	253	254	255	256	257	258	260	265	266	267	268	270	273	277	280
R1161																								
R1162	268	273	277	279	280	283	284	286	288	289	290	291	293	294	295	297	298	304	305	306	307	308	311	313
R1163	233	236	237	238	242	244	245	247	248	249	250	251	254	256	257	258	259	260	262	266	268	270	275	278
R1164	263	264	266	267	268	269	270	271	272	273	274	276	278	280	282	283	285	286	291	298	309	314	316	318
R1165	237	240	245	247	250	251	252	254	255	260	261	264	265	267	268	277	280	282	283	285	286	287	290	292
R1166	261	263	264	265	266	268	269	271	273	277	281	282	283	286	287	291	294	295	297	298	299	300	302	304
R1167	262	263	269	270	271	272	273	274	275	276	278	280	283	286	292	294	296	300	301	302	303	304	305	308
R1168	302	303	304	305	309	310	311	312	314	317	319	320	321	323	325									
R1169	264	265	266	267	270	271	272	273	274	275	276	277	278	280	281	284	285	287	293	294	295	296	297	298
R1170	272	274	275	276	277	278	280	281	282	287	290	291	293	296	301	302	303	304	306	307	308	309	314	316
R1171	261	262	263	264	265	266	267	269	271	279	281	284	285	286	287	289	291	292	293	294	296	297	299	301
R1172	300	301	302	303	307	309	311	313	314	316	317	318	320											
R1173	242	243	244	245	247	248	250	251	252	253	255	257	262	263	264	265	267	268	271	275	278	280	282	283
R1174	270	272	273	274	275	277	278	280	281	282	286	288	289	290	292	293	294	296	298	299	301	302	307	310
R1175	269	270	271	275	277	279	281	283	285	287	288	289	290	296	297	298	299	300	305	307	310	311	312	314
R1176	279	280	282	285	286	287	288	289	291	293	294	295	297	298	299	300	302	306	307	310	311	312	313	314
R1177	249	250	251	252	253	255	256	257	259	262	264	265	267	269	270	271	272	274	276	278	279	281	282	283
R1178	247	248	249	251	254	255	256	257	258	260	261	263	264	265	266	267	268	270	271	272	274	275	276	277
R1179	282	285	286	293	294	296	299	302	304	306	308	310	313	317	318	319	321	322	325					
R1180	274	276	278	279	280	281	282	285	287	288	289	290	291	294	295	298	299	302	304	307	310	313	315	317
R1181	256	258	264	266	267	270	271	272	274	275	276	278	283	284	285	286	287	288	289	290	292	294	297	300
R1182	257	258	261	262	263	264	266	267	271	275	277	279	281	282	283	286	287	288	290	292	293	294	295	298
R1183	244	245	248	250	252	253	255	257	258	260	261	262	263	264	265	266	270	277	279	282	283	284	287	289
R1184	250	251	253	254	256	257	258	259	260	261	262	264	266	267	269	270	277	280	284	287	290	293	295	297
R1185	282	285	286	287	288	289	291	293	296	297	299	300	301	302	305	308	309	310	311	313	314	316	317	318
R1186	324																							
R1187	235	241	247	248	249	250	256	258	259	265	266	269	275	277	281	284	285	289	293	295	296	297	298	301
R1188	301	303	307	308	311	313	317	318	319	320	322	323	325											
R1189	262	263	264	266	267	268	270	271	272	273	274	276	277	278	281	282	288	291	292	296	297	300	302	303
R1190	306	308	312	314	316	319	323																	
R1191	283	284	285	290	291	292	293	295	296	299	303	310	312	315	316	317	321	322	323					
R1192	229	232	234	238	239	240	241	250	252	253	254	257	259	262	264	265	266	267	268	271	272	274	275	276
R1193	268	269	271	272	273	274	275	276	278	279	280	282	285	287	288	292	293	294	297	298	299	300	301	303
R1194	240	241	244	245	246	247	248	249	250	252	253	254	263	265	266	267	270	271	273	275	279	280	281	282
R1195	254	255	257	262	269	270	271	273	275	277	279	280	281	282	283	286	288	290	291	293	294	296	297	298
R1196	304	306	309	310	312	313	314	315	317	318	325													
R1197	275	276	281	282	285	286	287	293	301	303	304	305	310	312	315	317	318	320	322	324	325			
R1198	278	281	283	284	287	290	292	294	296	297	301	302	308	311	312	313	314	315	316	319	324			
R1199	268	269	271	275	277	280	282	284	285	287	289	290	291	294	295	296	298	299	301	302	305	307	308	310
R1200	251	252	255	260	262	263	265	266	267	269	270	271	272	273	274	276	277	278	279	281	282	284	286	287

Copyright © 2005 IEEE. All rights reserved.
This is an unapproved draft, subject to change

Table 55A–3—P matrix: location 49 to 72

	C49	C50	C51	C52	C53	C54	C55	C56	C57	C58	C59	C60	C61	C62	C63	C64	C65	C66	C67	C68	C69	C70	C71	C72
R1201	260	262	264	265	267	269	272	273	276	277	280	283	284	285	286	287	290	291	293	295	298	299	300	302
R1202																								
R1203	237	238	239	242	243	245	248	251	252	254	255	256	257	259	260	261	262	269	271	272	274	276	277	278
R1204	274	275	276	278	279	280	281	282	286	288	290	292	295	296	297	298	301	303	304	307	309	313	314	315
R1205	255	256	258	260	261	263	264	267	269	270	271	273	277	284	285	286	287	288	289	290	292	296	297	299
R1206	266	268	269	273	275	279	286	290	293	295	298	302	303	304	305	306	309	310	317	318	319	321	322	323
R1207	270	271	273	275	280	285	289	291	292	294	295	298	301	304	311	313	314	315	317	320	322	323	324	
R1208	261	262	265	266	267	269	270	272	273	274	276	277	278	279	282	283	284	285	286	293	295	296	297	298
R1209	272	273	274	276	277	278	279	280	282	283	284	285	288	296	300	302	303	305	308	312	313	315	316	319
R1210	259	260	261	262	263	264	266	269	275	277	282	287	288	290	292	293	294	295	299	300	302	303	305	308
R1211	244	250	254	255	259	261	263	264	265	266	267	268	269	272	274	276	278	280	281	282	284	285	290	291
R1212	255	256	257	258	259	261	262	263	267	268	271	272	273	274	275	276	277	278	280	282	283	290	291	293
R1213	265	266	268	271	273	277	279	280	287	288	292	293	296	299	300	302	304	310	315	316	317	318	319	320
R1214	230	231	234	239	244	246	248	249	250	253	254	255	256	258	260	263	264	267	268	273	275	278	280	281
R1215	302	303	304	305	307	308	310	312	313	317	318	320	321	322	325									
R1216	247	250	254	259	261	262	263	264	265	266	269	271	272	273	274	275	276	278	279	280	281	284	285	286
R1217	289	290	292	293	294	296	297	298	300	302	303	304	305	307	310	313	316	318	319	323	325			
R1218	268	270	272	273	274	276	277	278	281	284	288	289	292	294	295	297	299	300	301	304	305	306	307	308
R1219	292	294	295	296	298	301	303	304	305	306	309	310	314	315	318	320	321	324	325					
R1220	252	253	259	260	261	263	265	266	269	270	273	275	277	279	281	284	286	288	289	291	292	293	294	295
R1221	234	236	240	249	251	254	255	256	257	258	259	260	261	263	264	265	268	273	277	279	280	281	285	286
R1222	266	267	268	271	273	275	280	281	283	284	286	287	289	290	291	292	294	296	297	298	299	300	303	305
R1223	262	263	265	266	268	269	270	275	277	279	280	282	283	284	286	287	288	291	296	297	298	299	300	303
R1224	311	312	313	315	316	321	322	324	325															
R1225	263	264	268	272	273	274	275	276	277	278	279	280	281	284	287	289	290	292	293	296	297	299	302	303
R1226	304	307	308	309	310	313	317	319	320	322	324													
R1227	263	264	266	267	268	270	273	275	277	282	283	285	286	288	289	290	293	294	295	299	300	301	303	305
R1228	268	269	270	271	275	276	277	279	280	281	283	287	288	289	297	301	304	305	310	311	314	315	321	322
R1229	268	272	274	276	277	278	281	282	283	286	291	298	299	300	301	303	304	305	306	309	312	318	323	324
R1230	252	260	263	265	266	267	268	270	275	279	280	281	283	287	289	290	291	293	295	298	303	304	305	306
R1231	250	254	261	267	269	270	271	273	275	280	284	286	287	291	292	293	295	296	299	300	301	302	303	307
R1232	296	300	301	303	304	305	307	312	315	319	323	324	325											
R1233	279	280	282	285	286	290	291	292	293	295	297	298	299	302	303	305	307	321	322	323	325			
R1234	247	248	249	250	254	256	257	260	261	262	265	266	267	269	271	275	277	281	289	292	293	297	301	302
R1235	274	275	276	278	280	281	282	285	286	287	288	290	294	295	300	303	305	306	307	308	309	312	313	314
R1236	285	286	287	289	290	292	293	295	300	301	302	306	309	311	314	315	316	318	321	322	324			
R1237	270	272	274	276	277	278	279	285	286	287	288	289	290	291	293	295	297	299	302	306	310	311	312	313
R1238	259	262	263	267	272	274	276	277	278	279	280	282	283	285	286	288	289	291	292	293	295	297	298	299
R1239	260	265	267	270	273	275	277	279	281	283	285	286	293	294	295	296	300	301	304	308	309	310	311	312
R1240	287	290	291	292	293	294	295	301	302	307	310	313	314	316	318	319	320	322	324					
R1241	240	241	242	245	246	248	253	255	261	263	266	270	271	272	274	275	276	277	279	280	281	283	291	292
R1242	280	281	284	285	286	288	290	292	293	295	297	299	301	302	303	305	308	309	310	311	312	313	317	
R1243	282	289	290	291	294	295	296	301	302	303	304	305	306	308	310	312	315	316	317	318	320	322	323	324
R1244	265	266	269	272	273	274	275	276	277	278	279	282	288	291	292	297	300	302	304	305	307	310	311	312
R1245	286	291	295	297	299	300	301	303	304	305	306	308	310	314	315	317	318	321	322	323	324			
R1246	271	273	277	279	280	281	284	290	291	292	293	294	295	296	299	300	301	304	308	310	317	318	319	320
R1247	285	286	288	291	293	294	295	297	301	305	308	311	313	316	317	322	324							
R1248	280	282	284	288	289	290	294	299	300	301	302	304	307	308	309	311	315	317	318	319	320	321	323	324
R1249	247	249	250	251	252	253	255	256	257	258	259	261	262	264	269	270	271	272	274	276	278	279	282	284
R1250	262	263	266	267	268	269	270	272	274	276	277	278	281	283	285	286	287	288	292	295	296	297	299	301
R1251	263	264	265	266	267	269	279	280	281	283	285	288	290	292	294	297	300	302	304	305	306	308	311	312
R1252	275	277	280	284	285	287	290	291	293	294	296	298	300	301	302	304	305	309	310	311	312	313	314	315
R1253	254	255	257	260	264	265	266	267	268	270	272	273	274	276	277	278	281	282	284	287	288	291	292	300
R1254	258	260	265	266	267	268	270	271	272	273	274	276	278	280	286	289	290	291	298	299	302	304	305	307
R1255	273	274	276	278	281	282	283	284	290	291	292	293	294	298	300	306	308	309	311	314	316	317	318	320
R1256	251	253	255	256	258	260	263	264	267	271	273	275	279	280	281	282	287	290	294	296	299	301	303	305
R1257	290	292	293	294	296	297	299	301	302	304	305	306	307	308	313	319	320	321	322	323	324			
R1258	244	248	250	254	256	257	258	262	263	264	268	270	272	273	274	276	277	278	281	283	287	288	290	291
R1259	250	251	253	255	256	257	258	259	261	262	263	265	266	268	269	271	272	274	276	277	278	279	281	282
R1260	270	272	273	274	276	278	281	282	283	284	285	287	288	290	292	296	298	299	303	304	308	309	313	314

Copyright © 2005 IEEE. All rights reserved.
This is an unapproved draft, subject to change

Table 55A–3—P matrix: location 49 to 72

	C49	C50	C51	C52	C53	C54	C55	C56	C57	C58	C59	C60	C61	C62	C63	C64	C65	C66	C67	C68	C69	C70	C71	C72
R1261	252	253	254	259	261	265	266	268	271	273	277	283	284	285	287	288	289	292	293	294	295	297	298	300
R1262	230	231	233	234	235	236	237	240	241	242	243	245	248	249	252	254	255	257	258	260	261	263	264	265
R1263	276	278	279	282	283	284	286	289	291	292	293	295	297	298	300	301	303	305	308	310	312	313	314	315
R1264	260	262	263	264	267	268	269	270	272	274	276	277	278	280	282	283	284	285	288	289	291	292	294	296
R1265	263	265	266	267	268	270	271	275	282	283	284	285	287	288	289	290	291	292	294	297	300	303	306	308
R1266	264	267	268	270	271	272	274	275	276	278	279	280	281	283	292	294	296	300	301	302	305	308	312	313
R1267	259	260	261	262	263	264	265	266	267	269	270	271	272	274	276	277	278	279	282	283	284	285	289	290
R1268	248	249	250	252	255	256	258	259	260	264	266	269	272	274	276	278	282	283	285	286	287	289	291	292
R1269	267	268	269	275	277	279	280	281	285	287	291	292	293	295	296	298	299	302	303	304	307	310	312	313
R1270	324																							
R1271	290	294	296	297	298	299	301	303	304	305	308	310	313	314	315	316	319	321	322	323	324			
R1272	252	253	264	265	267	268	272	274	275	276	277	278	279	280	281	284	286	288	290	295	298	301	304	307
R1273	259	262	265	266	268	269	270	272	274	276	277	278	279	281	284	285	287	288	289	290	292	294	297	298
R1274																								
R1275	256	258	259	262	264	265	266	267	269	270	273	275	277	281	283	284	286	289	291	295	296	299	304	308
R1276	260	263	264	265	267	269	271	273	280	282	284	286	289	290	293	298	299	300	302	304	305	306	308	311
R1277	255	259	260	261	265	266	269	270	271	272	274	275	276	277	278	279	280	282	284	285	286	287	288	289
R1278	285	287	288	289	291	292	293	295	296	298	300	302	305	306	307	308	309	310	311	312	313	315	317	318
R1279	254	255	256	257	259	260	262	263	267	268	269	272	274	276	277	278	279	280	283	286	287	291	292	293
R1280	271	272	274	276	277	278	280	283	284	285	286	288	289	290	293	294	296	299	304	305	306	307	312	313
R1281	258	260	262	263	264	267	269	270	272	273	274	276	278	280	281	282	283	284	285	290	291	292	293	294
R1282	298	300	301	303	305	306	307	312	315	316	317	320	321											
R1283	235	236	238	241	243	244	245	248	249	250	251	252	253	254	256	258	261	263	265	266	267	269	272	274
R1284	296	297	300	303	304	305	307	308	309	310	312	315	316	317	318	319	320	321	322	323	325			
R1285	288	290	296	299	304	305	306	307	308	310	312	315	317	319	325									
R1286	284	285	286	287	288	289	295	296	297	299	306	307	308	309	311	313	314	316	317	318	319	321	324	
R1287	241	244	246	248	250	252	254	264	268	270	271	273	275	279	281	282	284	286	287	289	293	295	297	298
R1288	229	230	235	238	242	244	245	247	249	250	251	252	253	256	260	261	267	268	270	272	273	274	275	276
R1289	269	270	275	280	281	282	283	285	286	290	297	300	304	305	313	316	318							
R1290	243	244	245	247	248	249	251	252	253	255	256	258	260	261	265	266	269	270	271	272	274	276	277	278
R1291	265	266	267	268	270	271	275	277	280	283	285	288	289	290	291	293	294	299	300	302	303	304	305	308
R1292	318	319	321	324	325																			
R1293	231	233	234	235	237	242	249	252	256	257	259	262	264	266	267	273	274	278	281	283	284	288	290	291
R1294	282	283	285	286	287	291	292	294	295	297	298	299	301	302	305	306	307	308	310	314	316	323	324	
R1295	272	274	275	276	277	278	280	282	283	284	292	294	297	299	300	302	303	305	308	310	312	315	317	320
R1296	280	281	285	286	290	291	293	300	301	303	305	306	307	308	309	310	311	314	315	316	319	320	321	322
R1297	265	266	268	269	271	273	277	280	281	283	284	286	288	290	292	294	295	298	300	301	302	303	305	306
R1298	292	295	296	298	299	301	302	305	306	307	309	312	313	315	317	319	320	321	322					
R1299	248	251	252	253	259	262	265	267	269	272	274	275	276	277	278	280	281	282	283	285	287	288	289	290
R1300	242	245	246	249	251	255	257	261	263	264	267	268	271	277	279	280	281	283	284	285	287	293	294	298
R1301	279	280	282	283	285	287	288	295	296	298	301	303	309	310	312	313	317	318	319	322	325			
R1302	252	253	254	255	260	261	263	264	265	269	271	272	274	275	276	278	282	283	284	285	286	288	291	293
R1303	282	285	287	288	289	290	291	299	300	302	306	307	309	313	323	324	325							
R1304	253	254	259	260	261	262	263	264	265	266	268	270	272	273	274	275	276	284	285	286	287	294	295	297
R1305	310	311	313	314	316	317	321	323	324															
R1306	266	268	269	270	273	275	279	282	283	284	286	290	291	293	295	296	298	300	302	304	305	306	308	311
R1307	302	307	308	313	315	317	318	323	325															
R1308	252	253	256	258	259	260	263	265	268	270	273	280	282	284	285	286	287	289	293	294	296	298	301	302
R1309	261	262	264	266	267	271	272	273	274	275	276	278	281	282	283	284	285	286	287	289	291	294	295	296
R1310	275	277	281	283	284	285	286	287	292	293	297	298	301	304	305	307	317	320	323	324	325			
R1311	251	253	254	257	260	261	262	264	267	269	273	279	280	281	282	283	285	286	288	289	290	292	293	294
R1312	269	279	280	281	283	284	287	288	289	290	291	293	295	296	297	301	307	310	311	315	316	317	320	321
R1313	241	243	246	248	249	251	253	254	256	258	260	265	269	270	272	274	275	276	277	278	280	282	283	285
R1314	258	261	264	265	266	269	270	272	274	275	276	279	282	284	285	288	291	294	295	297	298	299	301	302
R1315	299	300	301	303	307	308	309	311	312	317	318	319	320	321	323									
R1316	296	299	302	303	304	312	315	319	324															
R1317	305	306	307	310	311	314	318	321	322	323	325													
R1318	250	251	252	254	255	256	257	258	259	262	267	268	270	271	279	280	282	284	285	287	289	293	295	296
R1319	252	253	256	257	258	261	263	269	271	272	274	276	277	278	283	286	287	289	290	291	294	298	299	300
R1320																								

Copyright © 2005 IEEE. All rights reserved.
This is an unapproved draft, subject to change

Table 55A–3—P matrix: location 49 to 72

	C49	C50	C51	C52	C53	C54	C55	C56	C57	C58	C59	C60	C61	C62	C63	C64	C65	C66	C67	C68	C69	C70	C71	C72
R1321	270	273	275	280	281	282	283	285	287	288	291	292	293	294	302	304	307	308	309	310	311	312	313	314
R1322	243	244	245	248	250	253	254	256	257	258	259	260	262	264	267	269	270	272	274	276	277	278	280	282
R1323	263	266	268	271	272	273	274	276	278	279	280	282	283	289	290	291	293	295	297	300	301	302	303	304
R1324	283	284	289	290	291	293	297	301	302	303	305	307	309	310	315	316	317	318	320	321	324			
R1325	258	259	260	261	263	264	266	268	269	271	272	274	276	277	278	279	280	281	282	283	285	286	288	290
R1326	269	272	274	275	276	279	280	282	284	285	286	288	289	290	291	292	293	294	296	300	303	304	307	309
R1327	282	283	285	287	293	299	301	302	305	306	307	308	310	312	315	318	322	324	325					
R1328	250	254	255	257	259	262	265	266	267	268	269	270	275	279	281	282	284	286	287	289	290	292	294	295
R1329																								
R1330	322	323	324																					
R1331	229	230	233	236	239	241	243	244	246	249	253	255	257	258	260	261	262	266	267	269	270	272	274	275
R1332	265	266	267	268	270	271	272	274	275	276	278	279	280	281	283	285	286	287	289	291	292	294	295	296
R1333	303	304	306	310	311	313	317	320	321															
R1334	283	284	285	287	288	293	296	297	301	302	306	308	311	312	313	314	318	319	320					
R1335	229	231	234	235	236	238	239	240	241	242	244	249	250	252	254	256	258	259	261	266	269	270	272	274
R1336	250	251	252	254	255	257	258	260	261	262	263	264	266	268	270	271	272	274	275	276	278	279	280	281
R1337	261	263	265	266	267	268	275	279	282	284	285	287	295	296	298	301	302	306	308	309	315	317	318	319
R1338	263	267	269	270	272	273	274	276	277	278	280	283	285	286	287	289	291	292	293	294	296	297	301	302
R1339	266	267	271	277	279	282	285	286	290	293	295	297	299	301	305	306	309	312	315	319	320	322	323	324
R1340	286	289	291	292	294	298	300	301	302	305	306	309	317	318	320	321	323							
R1341	254	256	258	259	260	263	267	270	271	272	273	274	275	276	278	280	284	285	286	288	291	294	296	301
R1342	263	264	265	267	268	269	275	280	283	284	285	286	288	292	294	295	296	299	300	302	304	306	307	309
R1343	251	253	256	258	260	264	265	269	270	282	284	285	287	291	292	300	301	302	303	307	309	310	311	315
R1344	241	244	247	250	251	253	254	257	259	262	264	266	268	271	273	279	281	282	283	286	288	290	295	296
R1345	293	295	299	301	302	304	307	308	310	311	312	313	314	315	316	317	318	319	321	322	324			
R1346	289	294	295	299	302	304	305	306	307	308	309	310	311	315	317	318	319	320	321	322	324			
R1347	262	265	267	268	269	273	275	277	279	280	283	288	289	290	291	295	296	297	298	304	305	307	308	310
R1348	284	285	286	289	290	292	293	294	296	297	298	301	302	303	304	305	306	308	311	313	316	319	321	322
R1349	282	285	286	288	289	294	295	297	298	299	301	302	303	309	311	312	313	314	316	319	321	324	325	
R1350	310	312	316	319	325																			
R1351	283	284	285	287	289	293	295	301	306	307	309	310	311	312	313	314	318	319	322					
R1352	261	264	265	269	270	271	279	280	281	282	285	287	289	291	294	297	298	300	301	302	303	306	309	312
R1353	286	288	294	295	299	304	305	308	309	312	315	316	320	322	323	324	325							
R1354	302	304	306	307	309	310	311	313	314	316	317	318	320	322	325									
R1355	249	250	252	253	254	255	256	258	259	260	261	263	265	267	270	272	273	274	276	279	280	281	284	285
R1356	238	240	241	242	244	245	246	247	248	250	253	255	263	264	265	266	267	268	271	272	273	274	276	277
R1357	264	265	266	270	272	274	276	277	278	279	280	282	285	287	288	290	291	292	295	298	301	304	306	307
R1358	236	238	239	241	244	246	247	248	253	254	255	257	259	261	262	265	267	269	270	275	277	278	280	282
R1359	266	271	273	279	280	282	283	286	288	290	293	294	297	298	299	302	307	311	312	313	314	315	316	318
R1360	241	242	243	244	247	248	249	250	252	253	256	258	259	261	263	265	266	267	269	270	275	277	282	284
R1361	240	243	244	248	251	253	254	256	257	258	260	261	263	264	267	269	271	272	274	276	277	278	279	280
R1362	254	255	256	257	258	260	261	262	265	266	269	275	279	280	281	282	284	286	290	292	294	295	299	301
R1363	297	298	300	302	303	304	306	307	309	310	316	317	319	324	325									
R1364	254	255	261	265	266	267	268	270	272	274	275	276	278	279	280	281	287	288	291	293	294	297	298	300
R1365	254	261	265	266	273	277	281	282	283	284	288	293	295	296	298	299	302	304	306	307	308	309	314	315
R1366	245	247	249	251	253	254	257	260	261	262	269	273	275	277	278	279	280	281	283	284	285	286	288	289
R1367	292	293	294	295	296	298	300	301	302	306	307	309	310	311	312	313	316	322	323					
R1368	323	324	325																					
R1369	259	261	262	265	271	275	286	287	288	289	292	293	296	297	298	300	304	306	307	308	310	313	322	
R1370	277	285	288	289	290	292	293	296	297	299	300	303	304	305	306	310	311	312	313	314	315	317	319	320
R1371	299	300	305	306	308	309	312	314	319	321	322													
R1372	309	313	314	323	325																			
R1373	266	267	269	270	271	272	273	274	278	280	285	286	288	289	291	292	293	294	295	297	298	300	302	304
R1374																								
R1375	262	263	265	266	268	272	274	275	276	278	284	285	287	288	289	291	296	297	299	301	305	306	307	309
R1376	260	261	262	264	268	270	272	274	275	276	278	280	281	282	283	285	287	288	289	290	292	293	295	296
R1377	264	265	266	269	272	273	274	276	278	279	280	282	283	290	291	293	294	295	296	297	298	299	301	302
R1378	288	290	291	292	293	295	296	301	303	304	310	311	312	314	318	319	322							
R1379	234	236	237	240	241	242	243	244	245	247	253	254	255	257	259	261	262	263	264	266	269	273	279	281
R1380	305	308	312	316	321	322	323																	

Copyright © 2005 IEEE. All rights reserved.
This is an unapproved draft, subject to change

Table 55A–3—P matrix: location 49 to 72

	C49	C50	C51	C52	C53	C54	C55	C56	C57	C58	C59	C60	C61	C62	C63	C64	C65	C66	C67	C68	C69	C70	C71	C72
R1381	258	259	263	268	270	271	277	281	282	283	284	285	287	288	296	298	299	301	302	303	308	311	312	314
R1382	260	261	264	265	266	275	277	279	280	281	282	284	285	286	287	291	292	294	295	296	298	301	302	303
R1383	278	281	283	284	285	287	289	291	292	294	295	296	298	299	300	302	305	307	314	315	321	322	324	
R1384	260	262	263	264	265	266	267	268	270	272	273	274	275	276	277	278	279	280	281	282	284	285	287	291
R1385	250	251	252	253	255	256	257	258	259	261	262	264	269	270	271	272	274	275	276	278	279	280	283	285
R1386	296	297	298	299	304	307	309	312	316	318	320	321	322	324	325									
R1387	248	250	253	254	264	268	269	270	271	281	283	284	286	287	288	289	290	291	292	294	295	297	299	304
R1388	274	276	277	278	279	280	281	289	291	294	297	299	300	303	307	309	310	311	312	314	316	318	319	320
R1389	298	299	300	301	303	306	307	314	315	318	319	324	325											
R1390	260	262	263	265	266	267	268	272	274	276	277	278	279	282	283	284	285	287	291	292	294	296	299	300
R1391	259	263	264	269	271	272	274	276	278	280	281	283	284	285	289	292	293	294	295	296	300	302	303	305
R1392	305	306	315	316	320																			
R1393	262	263	264	267	268	271	277	280	281	284	285	287	293	294	296	297	298	299	301	303	304	307	316	317
R1394	257	258	259	262	264	265	266	268	270	271	272	274	275	276	278	282	284	286	288	289	290	291	295	297
R1395	286	287	290	295	297	298	302	305	307	309	312	313	316	317	318	319	320	321	325					
R1396	240	244	246	247	248	249	250	251	253	255	256	257	258	259	260	262	265	266	269	270	271	272	274	275
R1397	267	268	273	279	280	284	285	288	291	292	296	299	301	304	309	310	313	316	320	321	324			
R1398	247	248	250	252	254	259	260	265	267	269	270	271	272	273	274	276	277	278	281	282	284	285	287	288
R1399	242	243	245	246	247	250	251	252	254	256	258	260	261	263	265	266	268	271	272	273	274	275	276	278
R1400	253	255	257	259	262	264	268	269	270	273	275	281	282	286	287	289	290	294	295	296	297	298	299	301
R1401	270	272	273	274	276	277	278	282	283	285	287	288	289	291	293	295	300	302	305	306	307	311	312	314
R1402	280	281	282	283	285	290	291	294	295	296	297	302	303	304	305	308	312	313	314	317	319	323	324	
R1403	268	269	270	271	272	274	276	278	279	283	284	287	289	293	294	296	297	298	299	300	304	308	312	315
R1404	239	241	242	244	245	247	248	249	250	253	255	257	259	262	263	265	266	267	268	270	271	279	282	283
R1405	257	258	259	261	262	263	264	266	267	269	270	271	272	273	274	276	277	278	279	281	284	289	295	300
R1406	267	269	270	272	274	275	276	277	278	279	282	286	288	289	290	292	295	298	301	303	304	307	309	312
R1407	254	256	258	261	264	265	267	268	269	270	273	275	277	279	280	284	286	288	289	290	292	293	297	301
R1408	261	262	268	269	270	271	272	274	275	276	277	278	280	284	286	287	288	290	292	297	298	299	301	303
R1409	240	243	244	247	248	250	251	253	256	257	258	260	262	264	266	267	268	270	275	277	280	281	282	283
R1410	262	263	265	267	268	269	272	274	276	277	278	280	282	286	287	288	291	292	293	295	296	298	299	303
R1411	284	286	289	291	297	298	299	300	301	303	305	306	308	309	310	311	312	313	314	315	316	318	321	
R1412	268	272	274	275	276	277	278	279	280	282	289	290	293	294	296	297	298	300	302	304	307	315	318	319
R1413	273	274	275	276	278	279	281	282	285	286	290	293	294	295	296	297	300	302	303	304	309	310	316	318
R1414	297	298	299	301	305	306	310	315	317	324	325													
R1415	258	261	262	264	265	266	269	272	273	274	275	276	278	279	281	282	285	286	288	290	291	292	303	304
R1416	272	274	275	276	277	278	279	280	281	287	288	290	292	293	294	295	297	299	300	301	305	307	311	314
R1417	293	295	297	301	305	308	310	311	312	313	314	315	318	319	322	323	325							
R1418	278	283	284	286	289	290	291	293	295	300	302	303	308	312	314	315	316	317	318	319	321	322	323	324
R1419	280	281	282	283	284	285	286	287	290	293	294	295	296	297	298	299	300	301	303	305	307	308	309	310
R1420	306	311	313	314	317																			
R1421	270	275	277	279	284	287	291	292	293	294	295	296	297	299	300	303	306	308	311	315	316	317	319	321
R1422	250	251	253	254	265	269	270	271	272	273	274	275	276	277	278	279	280	285	286	287	288	289	290	296
R1423	263	266	267	268	272	273	274	275	276	278	279	281	283	284	285	287	291	292	294	295	296	299	300	301
R1424	273	274	276	277	278	279	281	282	283	284	287	289	290	291	293	295	297	298	300	302	303	312	315	319
R1425	313	314	318	320	321	322	325																	
R1426	278	279	288	290	292	293	294	295	296	298	302	307	308	309	310	315	316	319	323	324	325			
R1427	253	256	258	260	263	264	267	269	270	271	273	275	277	279	281	283	288	290	291	294	295	298	301	303
R1428	300	302	304	306	307	308	309	311	312	315	318	319	323	324	325									
R1429	289	293	295	296	297	298	299	300	303	304	305	306	307	308	309	310	311	312	323					
R1430	239	241	242	243	244	247	248	250	251	252	255	257	259	262	267	269	272	273	274	275	276	278	279	283
R1431	259	260	261	262	267	269	271	272	274	276	278	279	284	285	288	295	296	297	298	299	303	305	307	308
R1432	257	261	262	265	266	268	272	273	274	275	276	277	282	284	287	288	291	292	293	294	295	301	302	304
R1433	286	291	294	295	296	298	300	305	307	309	311	312	313	316	319	320	324							
R1434	259	261	263	266	267	269	275	279	281	283	286	287	289	290	292	293	294	296	297	305	306	307	310	311
R1435	320	321	322	323	324																			
R1436	251	252	260	265	266	267	268	272	274	276	277	278	279	280	284	286	288	290	291	293	297	298	300	302
R1437	231	232	235	237	239	241	242	244	245	246	248	252	253	255	264	265	266	267	268	270	271	272	273	274
R1438	257	258	259	260	261	262	264	265	266	268	275	279	280	281	282	283	285	287	288	290	293	296	297	298
R1439	229	230	231	238	239	240	244	247	249	252	253	256	258	259	260	261	262	264	265	268	270	271	273	275
R1440	250	251	252	253	254	255	260	261	262	263	265	266	267	268	273	275	277	280	282	283	288	291	294	296

Copyright © 2005 IEEE. All rights reserved.
This is an unapproved draft, subject to change

Table 55A–3—P matrix: location 49 to 72

	C49	C50	C51	C52	C53	C54	C55	C56	C57	C58	C59	C60	C61	C62	C63	C64	C65	C66	C67	C68	C69	C70	C71	C72
R1441	248	249	251	252	255	257	262	263	264	267	271	272	274	275	276	277	278	280	281	282	286	288	293	294
R1442	260	261	263	264	266	269	273	275	276	277	279	281	283	284	285	288	289	292	293	294	295	297	298	306
R1443	271	274	275	277	278	279	280	282	286	288	289	290	292	293	296	297	298	300	302	303	304	307	309	313
R1444	271	273	281	282	283	289	290	291	292	294	296	297	298	299	302	303	305	308	309	311	313	315	317	320
R1445	261	263	265	266	268	270	280	281	286	289	290	291	293	294	296	298	299	304	305	308	309	313	317	319
R1446	256	257	258	259	261	262	264	265	269	271	272	273	274	275	276	277	278	279	282	283	286	287	292	293
R1447	269	270	271	280	281	282	283	288	290	291	292	295	301	302	303	304	305	310	311	314	315	317	318	320
R1448	243	246	248	252	254	255	257	260	262	264	266	269	271	273	277	279	280	283	285	286	288	291	294	300
R1449	270	272	274	276	278	284	285	286	288	290	291	293	294	296	297	300	301	302	308	309	312	313	314	315
R1450	252	256	266	267	268	270	273	275	282	284	285	286	287	288	290	292	294	295	297	298	299	300	301	305
R1451	253	255	256	257	258	260	261	262	263	264	267	268	272	273	274	275	276	277	278	279	281	282	283	287
R1452	290	292	293	295	296	297	301	304	305	307	308	309	310	312	315	317	320	323	324					
R1453	270	271	273	275	277	280	281	284	285	286	287	290	291	292	293	297	299	302	303	304	305	310	311	312
R1454	276	277	278	279	280	287	288	289	290	292	295	296	297	298	300	302	308	309	316	319	320	321	322	323
R1455	294	296	298	300	301	302	303	304	306	307	308	310	312	313	314	317	318	319	320	321	323	324	325	
R1456	274	276	277	278	279	281	283	284	285	286	287	288	291	292	295	298	299	300	301	303	305	307	308	309
R1457	246	249	250	251	252	254	257	260	261	262	263	266	269	270	273	275	279	280	281	282	283	284	285	288
R1458	276	278	279	281	282	286	288	292	293	294	297	299	301	302	303	305	307	308	310	315	316	319	321	322
R1459	274	276	278	280	287	288	290	292	298	301	303	306	308	311	314	315	316	318	319	320	322	323	325	
R1460	277	278	279	280	281	284	285	286	287	288	291	293	295	296	300	301	305	311	312	313	314	319	322	323
R1461	273	275	280	281	283	285	286	287	288	290	294	295	297	300	301	304	305	307	308	309	311	312	315	316
R1462	262	265	266	268	269	270	275	281	284	286	291	293	294	295	296	297	298	299	300	304	310	312	313	316
R1463	264	266	267	269	270	271	272	274	276	278	279	281	283	284	287	295	296	297	298	302	303	307	309	310
R1464	269	271	272	273	274	275	276	277	278	279	282	284	288	289	290	291	292	296	297	303	304	306	309	310
R1465	233	234	237	238	239	241	242	243	245	246	247	251	252	254	255	257	259	261	262	264	265	266	269	272
R1466	264	267	272	274	275	276	277	278	280	281	283	284	287	292	294	296	300	304	305	308	310	311	314	315
R1467																								
R1468	236	238	240	241	243	245	247	252	253	255	258	259	260	263	264	265	268	270	271	273	275	279	280	281
R1469	242	243	244	245	246	247	248	249	254	255	256	257	258	260	262	264	268	270	271	277	280	282	284	289
R1470	295	296	299	302	303	304	305	306	308	310	316	317	319	321	325									
R1471	276	278	280	282	283	285	286	287	288	289	292	293	294	297	298	300	301	302	305	306	309	311	312	315
R1472	314	318	319	323	325																			
R1473	307	310	312	315	321	322	324																	
R1474	251	252	253	254	256	258	259	261	266	267	270	271	273	275	279	280	281	284	285	287	291	292	293	294
R1475	248	250	251	252	256	257	258	259	261	262	264	266	267	277	282	284	285	287	289	290	294	295	297	298
R1476	268	269	270	271	273	275	277	280	286	289	292	294	295	296	297	298	302	303	304	309	314	315	321	324
R1477	294	295	303	310	311	312	313	314	316	317	319	320	321	323	325									
R1478	285	287	290	292	294	295	296	300	301	303	304	305	306	308	309	310	315	316	319	322	323	324	325	
R1479	292	296	298	299	300	304	306	308	309	313	319	320	323	324	325									
R1480	286	287	288	289	291	294	297	299	302	303	305	306	308	309	311	312	314	315	316	317	319	320	321	323
R1481	260	261	262	263	264	265	266	267	268	269	270	275	279	283	285	286	290	291	297	300	301	302	303	306
R1482	259	266	268	270	271	275	279	281	284	286	288	290	291	292	295	296	297	298	301	302	304	305	307	310
R1483																								
R1484	254	255	256	258	259	261	264	265	268	271	277	279	281	284	286	287	290	292	293	295	300	301	302	305
R1485	274	276	277	279	282	285	289	294	296	299	301	302	304	305	308	310	311	312	313	314	315	318	319	320
R1486	312	316	318	319	321	322	324																	
R1487	277	281	282	283	287	288	291	292	293	295	296	298	302	304	306	310	315	318	325					
R1488	256	258	259	260	264	271	272	274	275	276	278	279	280	283	284	286	287	288	291	292	293	295	298	299
R1489	265	266	269	270	271	272	276	277	279	281	282	283	284	289	290	291	294	296	298	299	300	301	303	304
R1490	253	254	257	259	260	261	263	265	266	269	270	272	274	275	276	278	279	280	281	282	284	286	289	291
R1491	302	303	305	309	312	313	316	317	320	321	322	324	325											
R1492	282	283	286	290	291	295	299	304	307	310	312	313	314	316	317	319	320	321	322					
R1493	275	276	277	278	279	281	282	283	284	285	287	290	292	294	296	297	298	299	308	312	316	318	320	322
R1494	258	259	262	267	268	272	273	274	276	278	279	280	282	283	284	286	294	296	297	299	300	301	303	304
R1495	262	263	264	265	272	274	276	277	278	280	282	283	284	287	290	296	298	303	306	308	312	313	317	318
R1496	244	247	248	250	251	253	254	255	257	259	261	262	268	271	280	282	290	291	294	296	297	298	299	300
R1497	257	258	262	264	267	269	271	272	273	274	275	276	277	278	281	282	283	286	287	292	294	296	297	301
R1498	249	250	251	256	257	258	259	262	267	269	270	271	272	274	275	276	277	278	283	284	285	287	293	294
R1499	234	236	237	238	240	241	242	244	249	251	252	253	254	256	258	259	260	261	264	267	268	271	272	273
R1500	248	251	253	254	258	260	261	266	268	269	270	271	272	274	275	276	278	280	285	286	288	289	290	291

Copyright © 2005 IEEE. All rights reserved.
This is an unapproved draft, subject to change

Table 55A–3—P matrix: location 49 to 72

	C49	C50	C51	C52	C53	C54	C55	C56	C57	C58	C59	C60	C61	C62	C63	C64	C65	C66	C67	C68	C69	C70	C71	C72
R1501	249	250	253	254	256	258	259	261	264	266	268	270	271	272	274	276	277	278	280	282	283	284	285	286
R1502	273	275	279	280	284	285	286	290	292	293	299	300	301	302	303	305	306	307	308	310	315	321	322	324
R1503	323																							
R1504	297	305	311	314	315	317	318	319	320	322	324													
R1505	269	271	272	273	274	275	276	277	278	282	285	286	287	290	291	293	294	296	297	302	303	304	307	308
R1506	237	238	239	240	242	244	245	246	247	248	250	254	258	259	260	261	262	263	265	266	267	268	272	273
R1507	250	251	254	259	261	264	266	267	268	269	270	271	273	275	279	280	283	290	292	299	302	304	305	306
R1508	267	268	272	273	274	276	277	278	280	282	284	286	287	288	289	290	291	296	297	298	299	300	304	305
R1509	283	286	287	288	289	291	295	296	298	302	303	304	305	306	307	310	313	315	316	317	319	320	321	
R1510	249	252	253	254	256	257	258	259	261	262	264	271	272	273	274	275	276	277	278	279	280	282	283	285
R1511	281	282	283	284	289	290	291	292	294	296	298	299	302	303	305	306	312	313	316	317	318	319	323	
R1512	253	254	255	256	257	258	262	264	265	266	268	269	272	273	274	276	278	279	280	282	284	290	293	294
R1513	257	258	259	262	267	271	272	274	276	278	279	280	281	285	286	287	288	291	292	293	295	297	299	300
R1514	275	276	278	281	282	283	284	285	286	295	297	299	300	303	304	305	306	309	310	312	313	315	319	322
R1515	248	251	255	259	260	261	263	267	268	270	271	277	280	282	284	285	289	292	293	294	296	297	300	301
R1516	245	247	250	251	252	255	257	259	262	264	265	266	269	273	275	277	279	282	283	286	288	289	290	291
R1517	283	288	292	293	296	299	300	305	308	310	311	312	313	314	315	317	319							
R1518	265	266	267	270	271	275	277	279	280	285	291	293	294	295	296	297	299	303	308	312	313	314	316	318
R1519	239	240	241	242	243	244	245	248	250	257	259	261	262	265	266	269	270	271	272	273	274	276	278	279
R1520	242	243	245	246	247	248	250	251	252	253	254	255	257	259	267	269	270	273	275	281	286	288	289	290
R1521	270	271	272	274	276	278	280	281	283	286	288	290	296	298	299	300	301	302	304	310	312	315	323	324
R1522	249	252	255	256	258	259	263	264	267	269	270	271	279	281	285	290	291	294	296	297	298	301	305	307
R1523	265	266	269	271	272	276	281	282	284	285	287	288	289	292	296	299	301	302	304	307	308	310	311	312
R1524	289	290	292	293	298	299	300	303	304	306	310	312	313	319	322	323	325							
R1525	239	243	244	245	247	249	250	255	256	258	259	260	263	264	268	270	271	273	277	280	281	282	284	285
R1526	268	270	271	272	274	276	278	280	281	283	289	291	297	298	299	300	302	306	307	308	309	310	311	312
R1527																								
R1528	244	246	250	251	257	262	265	268	270	271	273	285	287	288	291	292	293	294	299	302	306	307	309	310
R1529	248	249	250	252	253	254	256	257	258	259	261	262	266	268	270	272	274	276	278	282	283	284	285	288
R1530	255	256	257	258	260	261	262	264	268	271	272	273	274	276	277	278	280	283	285	286	288	291	295	296
R1531	266	267	268	270	273	275	277	285	289	293	294	295	296	297	299	300	306	308	309	311	312	314	317	318
R1532	257	259	260	262	265	266	267	269	271	272	273	274	275	276	278	281	282	284	285	289	290	293	294	299
R1533	254	255	256	257	258	259	262	263	264	269	272	274	276	277	278	282	283	285	286	287	288	289	291	293
R1534	233	234	236	238	240	243	244	245	247	249	250	251	254	255	256	260	263	268	270	271	277	280	281	285
R1535	251	253	254	255	260	261	262	263	266	271	272	274	276	277	278	280	283	284	286	287	289	290	294	301
R1536	286	291	293	295	298	300	301	305	306	310	311	313	314	317	318	319	320							
R1537	251	253	254	255	257	259	262	263	264	267	269	270	271	273	275	277	279	281	283	284	288	291	292	293
R1538	308	309	310	313	314	316	317	321	322	323	324													
R1539	295	296	300	302	304	305	306	308	309	311	313	314	315	317	318	321	325							
R1540	296	298	299	300	301	305	307	308	311	312	315	316	317	319	320	321	322	324	325					
R1541	267	270	272	273	274	276	277	278	281	282	283	284	285	286	289	290	292	294	295	298	299	302	303	304
R1542	257	258	260	261	262	269	271	272	274	276	277	278	279	282	283	286	290	291	293	295	297	298	299	301
R1543	274	276	278	279	280	282	285	286	287	290	291	292	293	294	295	296	297	299	300	302	304	305	308	309
R1544	272	274	276	278	279	281	284	288	289	292	293	299	302	303	304	305	306	310	311	314	316	317	318	319
R1545	248	249	250	253	254	256	257	260	261	262	263	264	267	269	270	275	280	282	285	286	288	289	291	295
R1546	290	292	295	298	300	301	303	305	306	308	309	310	311	319	320	322	324							
R1547	256	257	258	259	260	261	262	263	264	265	269	271	272	274	276	278	279	282	283	286	289	291	292	293
R1548	281	283	289	291	299	300	301	302	303	305	306	307	308	309	310	314	315	316	318	319	320	322	323	324
R1549	274	276	278	282	285	287	288	292	293	298	301	302	303	304	305	311	313	314	318	323	324			
R1550	264	265	266	268	271	272	273	274	275	276	277	278	281	283	284	286	287	292	293	295	297	299	300	305
R1551	262	263	265	266	267	268	270	271	274	275	278	279	282	283	285	287	288	292	293	296	299	302	303	305
R1552	295	296	297	300	301	302	303	308	309	313	317	318	319	323	325									
R1553	281	282	283	284	286	288	291	293	296	298	300	303	304	305	306	307	309	311	314	315	316	317	325	
R1554	272	273	274	276	278	284	285	287	288	293	298	299	301	302	305	316	317	319	321	323	325			
R1555	278	283	284	289	292	296	298	299	300	301	303	306	310	311	313	315	321	322	323	324	325			
R1556	263	264	268	272	274	275	276	277	278	279	281	282	284	285	286	287	288	293	294	297	298	303	304	305
R1557	244	246	248	249	250	252	254	256	258	261	264	265	266	269	272	273	274	275	276	278	280	281	283	284
R1558	306	308	309	312	313	317	318	319	323	324	325													
R1559	259	260	261	262	266	270	273	282	284	286	287	288	289	290	291	293	296	297	298	300	301	305	306	309
R1560	248	251	252	253	260	263	266	267	269	271	273	275	281	283	285	287	288	292	293	295	296	299	302	303

Copyright © 2005 IEEE. All rights reserved.
This is an unapproved draft, subject to change

Table 55A–3—P matrix: location 49 to 72

	C49	C50	C51	C52	C53	C54	C55	C56	C57	C58	C59	C60	C61	C62	C63	C64	C65	C66	C67	C68	C69	C70	C71	C72
R1561	268	269	277	279	285	286	287	289	296	299	300	301	307	314	316	318	320	321	322	324	325			
R1562	286	287	289	290	294	295	296	298	300	304	305	306	308	309	311	314	315	318	320	321	325			
R1563	254	255	260	261	264	265	266	268	277	279	280	286	287	290	291	292	297	301	302	303	305	306	308	309
R1564	286	287	289	291	292	294	295	296	297	298	299	300	302	304	305	306	307	308	310	312	314	316	319	322
R1565	251	252	254	256	258	263	264	266	267	268	270	273	275	277	279	280	284	285	287	289	292	301	311	312
R1566	248	249	250	251	252	253	254	255	259	264	265	267	268	269	271	273	280	282	283	289	291	294	296	302
R1567	287	288	289	290	291	292	293	296	298	301	303	305	307	309	310	312	313	318	320	324	325			
R1568	297	298	299	300	301	302	303	304	305	306	307	308	309	311	313	318	319	322	324					
R1569	287	288	289	290	293	294	297	302	303	306	311	312	314	315	316	317	318	319	320	323	324			
R1570																								
R1571	257	259	262	264	265	266	267	268	271	273	275	277	279	283	284	286	288	289	290	291	292	293	296	299
R1572	275	277	279	280	282	286	287	289	292	294	296	298	302	304	308	313	315	316	319					
R1573	281	282	285	286	287	289	293	294	295	296	297	298	301	302	303	305	307	308	309	310	312	313	317	318
R1574	267	268	270	271	272	273	274	275	276	277	278	284	285	287	288	291	292	293	295	296	297	300	301	302
R1575	279	280	283	285	287	288	291	293	296	298	299	302	304	309	313	319	320	322	323	324	325			
R1576	265	267	268	269	270	271	277	280	285	286	288	290	294	297	298	302	305	306	307	308	310	313	315	316
R1577	260	261	262	266	267	268	269	275	277	279	280	281	288	290	291	293	295	296	297	298	299	301	306	307
R1578	282	283	284	285	286	289	290	291	292	294	295	298	302	303	307	308	312	313	315	317	318	319	320	321
R1579	256	258	260	261	266	267	269	270	272	273	274	276	278	283	286	289	291	292	293	294	296	299	301	303
R1580	238	239	245	246	249	250	251	254	259	260	261	268	270	281	282	284	286	288	289	290	291	292	298	300
R1581	254	255	256	260	261	263	264	265	270	273	275	279	280	282	283	286	287	290	294	295	296	297	300	301
R1582	247	249	251	252	254	257	262	263	265	268	270	273	275	277	279	280	284	287	290	293	297	300	302	303
R1583	281	282	283	285	286	291	292	293	294	295	299	302	303	305	306	308	310	316	318	323	324			
R1584	288	289	294	296	298	299	300	301	303	306	307	318	321	324	325									
R1585																								
R1586	280	281	285	287	288	293	294	295	297	299	300	301	304	305	308	309	311	314	315	316	318	322	323	324
R1587	252	253	255	256	257	258	259	261	263	264	267	269	272	273	274	275	276	277	278	280	282	283	284	285
R1588	266	269	270	271	277	287	288	290	291	292	293	298	301	304	308	309	312	315	316	319	320	321	322	324
R1589	273	277	279	280	281	284	285	287	295	298	302	303	306	307	308	309	312	313	315	319	322	323	324	
R1590	303	305	306	311	312	314	317	318	319	321	325													
R1591	253	254	255	256	257	258	259	261	262	264	268	272	273	274	275	276	278	280	282	283	284	286	287	289
R1592	285	287	288	290	293	299	300	301	303	305	306	307	311	315	317	318	320	322	323	324	325			
R1593	236	240	241	242	243	245	246	251	252	253	255	259	260	262	265	268	269	273	277	279	282	283	285	286
R1594	243	244	245	247	250	251	252	254	256	258	259	264	265	266	268	269	270	271	277	280	281	282	284	286
R1595	259	260	262	263	267	273	275	277	284	286	287	291	296	298	299	306	308	309	311	312	313	314	317	318
R1596	261	262	263	264	268	269	270	271	280	284	286	289	290	291	292	293	294	296	297	303	304	305	306	307
R1597	256	258	259	260	264	265	267	269	272	274	276	278	282	283	286	287	288	289	291	292	293	294	295	303
R1598	246	247	250	253	254	257	259	261	262	264	265	266	267	268	270	272	274	276	277	278	284	285	286	287
R1599	292	293	294	295	296	297	298	300	301	302	303	304	307	308	309	311	314	316	319	320	323	324	325	
R1600	236	237	238	239	241	242	243	248	250	251	253	254	255	259	262	269	270	271	273	275	280	283	286	290
R1601	289	290	291	294	295	297	299	302	303	304	306	307	308	310	315	321	322	324	325					
R1602	261	263	264	265	266	268	270	271	273	277	279	282	283	285	286	292	295	296	297	299	300	301	302	303
R1603	284	286	287	288	289	291	293	295	296	297	298	303	304	305	306	310	312	313	314	315	316	318	319	322
R1604	290	291	294	299	300	301	302	305	306	307	308	309	310	312	314	318	321							
R1605	254	255	256	257	260	262	263	265	266	269	270	273	275	277	279	282	284	286	287	296	298	302	304	305
R1606	242	244	246	247	250	251	252	253	254	256	259	260	261	266	269	271	272	274	276	277	279	283	285	286
R1607	256	257	258	259	260	262	265	266	268	270	273	277	279	280	290	295	298	300	303	306	307	309	311	312
R1608	279	282	283	285	286	287	289	290	296	300	305	306	310	312	313	314	315	320	323	324	325			
R1609	254	255	256	258	261	264	265	266	268	270	271	272	273	274	276	278	283	287	290	292	293	296	298	299
R1610	305	307	309	311	314	315	318	319	324															
R1611	251	252	254	256	257	258	260	261	262	263	269	270	272	273	274	276	278	281	282	283	287	289	291	292
R1612	226	227	228	231	232	233	235	236	238	239	240	241	242	243	244	245	250	252	253	258	261	262	264	265
R1613	278	279	283	284	285	286	287	289	290	291	292	294	295	296	298	299	302	304	306	311	313	314	315	317
R1614	277	278	282	283	284	285	287	289	294	295	296	297	302	308	309	311	312	313	315	318	322	323	324	
R1615	256	257	260	262	269	271	276	279	280	282	287	288	289	293	294	295	297	298	300	301	302	303	306	309
R1616	296	297	299	301	304	305	306	308	309	310	311	312	313	314	315	316	317	318	319	323	324			
R1617	284	285	286	287	288	289	290	291	292	294	296	297	298	300	304	306	309	311	314	317	319	321	324	
R1618	247	249	250	252	254	255	256	258	260	262	263	265	266	269	271	272	273	274	276	277	278	280	282	283
R1619	261	262	263	264	265	267	268	269	270	271	272	274	276	278	279	281	284	285	291	292	293	294	295	296
R1620	271	275	281	284	285	287	289	295	296	298	301	304	308	309	310	313	315	316	318	321	322	324	325	

Copyright © 2005 IEEE. All rights reserved.
This is an unapproved draft, subject to change

Table 55A–3—P matrix: location 49 to 72

	C49	C50	C51	C52	C53	C54	C55	C56	C57	C58	C59	C60	C61	C62	C63	C64	C65	C66	C67	C68	C69	C70	C71	C72
R1621	285	287	288	290	291	292	294	295	296	297	298	299	302	304	305	306	307	308	310	311	312	313	315	319
R1622	244	245	246	247	248	250	251	252	254	258	260	266	267	270	271	272	273	274	275	276	278	282	285	286
R1623	263	265	267	269	271	281	282	283	285	286	287	289	290	292	299	301	302	304	305	306	310	311	312	313
R1624	278	281	283	284	285	287	288	289	290	291	292	293	296	297	298	299	300	301	303	304	305	306	310	311
R1625	285	286	289	291	292	293	294	296	298	301	302	303	306	307	308	311	312	314	316	317	318	319	320	321
R1626	247	249	250	253	254	256	257	258	259	264	267	268	273	277	280	282	284	285	288	289	291	292	294	296
R1627	265	268	269	270	279	280	281	282	283	286	287	289	290	292	295	298	299	301	302	305	306	308	309	311
R1628	258	264	265	266	267	271	273	277	279	281	283	284	285	286	287	288	291	292	294	300	301	303	306	307
R1629	255	256	258	259	260	262	263	265	266	267	273	275	279	284	285	286	287	289	292	294	297	300	301	303
R1630	264	266	275	277	279	282	283	284	285	286	288	290	294	297	299	300	301	302	305	306	311	312	313	317
R1631	247	249	251	252	257	259	262	263	264	267	268	271	275	279	280	281	283	284	285	287	288	293	295	296
R1632	246	248	250	253	254	256	257	258	259	261	262	265	267	268	270	273	279	280	281	283	288	292	293	295
R1633	254	257	259	260	261	262	263	267	269	270	272	273	274	276	278	283	284	286	287	290	293	294	295	296
R1634	255	257	261	262	263	265	267	269	270	273	277	279	280	283	289	292	293	294	296	297	300	305	307	308
R1635	292	298	302	303	304	309	311	314	315	316	317	318	319	320	323	324	325							
R1636	299	301	303	304	305	308	310	312	316	319	321	322	324											
R1637	260	261	264	265	267	269	270	272	274	276	278	280	282	283	285	286	287	289	290	292	294	299	301	303
R1638	285	289	291	292	293	294	296	297	298	299	300	302	303	307	309	310	312	313	315	317	319	320	321	323
R1639	324																							
R1640	243	246	247	248	249	251	254	256	257	258	260	262	263	264	267	269	272	274	275	276	277	278	281	282
R1641	236	240	243	246	248	249	250	252	253	254	255	256	257	258	259	261	262	264	265	267	268	271	277	279
R1642	299	300	301	303	305	307	308	311	313	314	317	320	321	322	323									
R1643	260	261	264	267	268	270	272	273	274	276	278	280	281	284	285	286	287	288	290	292	293	294	295	296
R1644	253	256	258	260	261	265	266	269	270	275	284	285	287	288	289	290	292	293	296	300	302	303	304	305
R1645	282	285	286	287	291	292	293	294	295	296	298	299	300	301	306	307	311	314	319	321	322	324	325	
R1646	273	280	281	284	285	290	294	296	298	299	300	303	304	305	310	311	313	314	316	319	320	322	325	
R1647																								
R1648	254	255	257	260	262	264	265	269	272	274	275	276	277	278	279	280	282	284	288	289	291	293	295	296
R1649	277	278	279	283	284	285	293	294	295	296	299	300	301	302	305	309	311	312	314	315	316	321	323	324
R1650	247	248	251	254	255	259	263	264	265	266	269	270	272	273	274	275	276	277	279	282	285	286	289	290
R1651	256	258	259	260	263	264	265	268	271	275	277	280	282	283	285	287	288	290	291	293	294	297	298	299
R1652	255	260	261	262	263	264	269	270	271	273	277	280	281	283	286	287	288	289	290	291	293	295	296	298
R1653	245	247	248	250	251	252	257	259	260	262	263	269	270	271	272	273	274	276	277	279	281	282	284	285
R1654	242	245	246	249	251	252	254	256	257	259	260	262	263	264	265	269	270	273	275	277	279	280	281	282
R1655	263	265	266	268	271	273	276	277	281	284	285	286	288	289	292	294	295	298	299	301	303	304	306	308
R1656	279	281	283	286	290	291	296	297	298	300	302	303	304	305	307	309	310	315	317					
R1657	239	240	241	243	244	247	250	252	253	257	260	261	262	268	270	271	273	279	280	281	283	284	288	289
R1658	253	259	263	264	268	269	272	274	276	278	279	280	281	283	284	289	290	291	292	294	296	297	298	301
R1659	277	278	280	281	284	290	291	292	293	297	298	300	301	302	304	305	306	307	309	311	312	313	314	315
R1660	276	278	280	281	283	285	293	296	297	300	304	305	308	309	311	312	313	314	315	316	317	320	321	324
R1661	246	247	250	254	257	259	260	261	262	263	264	266	269	272	274	275	276	277	281	284	286	288	289	290
R1662	264	265	266	267	270	271	273	277	279	281	285	287	289	292	293	294	295	296	297	299	302	303	304	308
R1663	313	314	316	320	321	323	325																	
R1664	227	229	231	238	239	241	243	244	245	246	249	250	252	255	259	260	261	263	264	269	272	273	274	276
R1665	280	281	282	288	291	293	294	295	300	303	304	305	308	311	312	314	315	316	320	322	324			
R1666	288	289	291	294	295	297	299	300	301	303	307	310	311	313	314	316	320	322	323					
R1667	237	238	239	240	241	244	245	246	247	248	250	254	256	260	261	262	263	264	265	266	267	268	270	271
R1668	282	284	285	286	287	289	290	293	294	302	304	305	308	310	314	316	317	318	319	320	323			
R1669	256	258	259	260	261	268	270	271	272	273	274	276	278	280	281	282	287	288	289	290	291	296	298	299
R1670	256	257	262	264	265	269	271	275	279	281	282	283	288	289	290	291	292	293	294	299	301	303	305	306
R1671	302	303	305	306	311	314	315	317	318	320	322													
R1672	253	255	256	258	260	261	263	265	266	267	269	270	271	272	274	276	277	278	279	280	281	283	287	290
R1673	266	267	268	269	272	274	275	276	277	278	280	281	283	287	289	291	292	293	297	298	299	300	302	305
R1674	304	305	306	307	308	311	314	316	317	319	320	323	324											
R1675	233	234	237	239	248	253	255	256	257	258	262	263	265	266	267	268	269	270	271	272	274	275	276	277
R1676	273	274	275	276	278	279	284	288	290	293	298	299	301	307	311	314	317	319	322	324	325			
R1677	297	298	301	303	304	306	307	309	310	311	317	321	322	324	325									
R1678	293	295	297	299	302	303	304	305	306	307	313	316	319	321	323									
R1679	289	290	291	293	298	300	301	303	305	306	307	308	309	310	317	318	319	320	321	322	325			
R1680	284	285	288	290	291	292	293	298	299	305	309	311	313	314	315	316	317	324	325					

Copyright © 2005 IEEE. All rights reserved.
This is an unapproved draft, subject to change

Table 55A–3—P matrix: location 49 to 72

	C49	C50	C51	C52	C53	C54	C55	C56	C57	C58	C59	C60	C61	C62	C63	C64	C65	C66	C67	C68	C69	C70	C71	C72
R1681	262	264	267	269	270	271	273	275	279	281	284	286	291	293	294	296	297	298	301	304	306	307	308	309
R1682	275	276	277	279	281	282	283	284	285	286	287	290	291	292	293	295	298	300	301	304	305	310	312	314
R1683	302	309	313	316	318	320	323																	
R1684	263	265	267	271	272	273	274	276	278	281	285	287	288	291	294	298	299	300	304	305	310	311	319	320
R1685	259	260	261	262	263	265	266	267	269	270	273	275	277	279	281	282	284	286	288	291	293	295	296	297
R1686	274	276	278	282	283	284	286	287	292	294	295	296	297	298	299	302	303	309	311	314	315	317	320	322
R1687	286	287	288	289	290	291	294	295	297	299	300	302	303	306	308	312	313	315	318	321	324			
R1688	242	243	244	246	249	251	255	256	258	259	265	266	269	270	271	272	273	274	275	276	278	279	280	282
R1689	273	275	280	281	282	284	288	289	292	293	294	295	296	300	302	303	304	306	308	309	312	315	316	317
R1690	246	249	250	251	252	255	259	260	263	264	266	268	269	272	273	274	275	276	277	279	280	284	286	287
R1691	281	282	284	288	289	290	291	292	295	296	297	298	302	304	305	306	308	311	312	313	316	319	320	321
R1692	294	297	299	300	301	302	304	305	306	307	309	310	312	315	316	317	318							
R1693	266	269	270	273	277	279	281	284	287	289	290	291	293	294	295	296	298	301	304	305	308	310	311	312
R1694	261	264	269	271	273	275	279	283	285	288	289	290	291	292	294	296	297	299	306	308	309	310	311	312
R1695	235	236	238	239	242	247	249	251	252	255	256	257	258	259	260	261	262	264	265	267	268	269	270	271
R1696	278	280	283	284	286	289	290	292	293	294	296	297	298	303	304	311	312	313	321	322	325			
R1697	275	277	280	282	286	291	294	295	299	302	303	310	311	312	314	318	321	324	325					
R1698	310	311	312	314	316	317	319																	
R1699	241	243	245	246	247	250	251	252	253	254	257	260	262	263	268	269	272	273	274	275	276	277	278	279
R1700	241	242	243	245	246	256	258	259	260	261	263	264	266	267	268	271	272	274	276	277	278	279	282	283
R1701	264	268	270	272	274	275	276	278	281	282	284	285	287	288	289	290	291	292	293	296	297	299	303	305
R1702	260	262	265	267	268	269	271	272	273	274	276	277	278	281	283	285	286	290	298	299	301	302	303	304
R1703	283	284	286	289	290	291	293	297	298	299	303	312	313	315	317	320	322							
R1704	298	299	301	302	304	308	311	312	314	315	320	321	325											
R1705	263	267	268	269	271	272	273	274	275	276	277	278	280	282	283	285	288	290	291	293	295	297	298	299
R1706	250	251	253	254	256	260	261	263	265	266	267	268	272	273	274	276	278	283	284	285	286	287	293	301
R1707	254	255	260	261	265	266	268	269	270	273	277	281	283	284	285	286	292	293	294	295	296	297	298	300
R1708	259	269	271	272	274	276	278	279	280	281	283	285	286	287	288	290	291	295	296	297	298	301	302	303
R1709	265	266	267	268	269	271	275	277	280	281	282	283	287	290	292	294	296	297	298	299	302	303	305	307
R1710	277	279	280	282	283	286	288	290	291	292	294	295	297	299	301	302	304	306	308	310	311	312	321	323
R1711	251	253	258	261	264	265	267	269	271	273	275	277	280	281	282	283	285	288	289	294	296	298	300	303
R1712	285	286	287	294	295	296	297	299	304	309	310	316	318	322	323									
R1713	279	286	288	290	291	296	300	301	302	303	308	309	310	312	313	316	321	323	325					
R1714	284	285	286	287	288	292	294	296	298	299	301	303	305	307	310	315	319	321	322	323	325			
R1715	227	230	234	238	240	241	242	244	246	250	252	255	256	257	258	259	261	262	265	266	268	270	271	275
R1716	244	247	249	250	252	253	254	255	259	260	264	269	271	273	284	285	287	289	291	293	296	299	303	304
R1717	274	275	276	277	278	280	285	287	292	293	297	298	304	305	306	310	311	312	313	314	315	316	317	319
R1718	278	283	284	286	289	290	293	294	296	298	299	302	303	304	307	310	313	315	318	321	322	323	324	
R1719	252	254	256	265	266	268	272	274	275	276	278	279	283	284	286	289	291	293	294	297	298	300	302	303
R1720	258	261	262	263	266	267	269	270	271	275	279	280	281	282	284	285	286	287	289	290	291	292	293	294
R1721	272	274	276	278	279	284	288	294	296	297	298	299	301	303	304	305	306	307	310	313	315	316	318	319
R1722	274	275	276	277	278	279	280	282	285	286	287	288	289	292	294	297	301	306	307	310	311	314	316	317
R1723	263	264	266	270	272	273	274	276	278	280	283	285	290	291	292	294	295	296	301	302	306	311	313	315

Copyright © 2005 IEEE. All rights reserved.
This is an unapproved draft, subject to change

Table 55A–4—P matrix: location 73 to 96

	C73	C74	C75	C76	C77	C78	C79	C80	C81	C82	C83	C84	C85	C86	C87	C88	C89	C90	C91	C92	C93	C94	C95	C96
R1	321																							
R2																								
R3	316	317	319	320	321	323	325																	
R4	319	321	322	324	325																			
R5	325																							
R6	319	321	325																					
R7																								
R8	300	304	306	307	309	314	315	316	318	320	322	323	325											
R9	295	296	297	298	300	302	303	307	308	309	311	312	315	316	317	320	321							
R10	302	303	304	305	309	311	315	316	320	321	322	324	325											
R11	323	324	325																					
R12	323	324	325																					
R13	314	318	319	321	322	324	325																	
R14																								
R15	278	280	284	285	287	289	293	295	296	300	301	302	303	305	306	310	312	314	320	322	324			
R16																								
R17	316	318	320	322	324																			
R18																								
R19	306	307	308	309	310	311	317	318	323															
R20	291	293	294	295	297	299	300	301	303	306	307	308	309	310	311	312	315	316	317	319	320	321	322	
R21	321	323	324																					
R22																								
R23	323																							
R24	300	301	303	305	308	309	310	317	320	321	322													
R25	304	305	309	311	314	315	318	319	320	321	325													
R26	298	300	301	303	304	308	311	312	315	319	320	321	324											
R27																								
R28	295	297	298	302	303	304	306	308	312	314	317													
R29	286	287	290	293	298	301	303	308	311	312	314	315	318	321	322	323	324							
R30																								
R31																								
R32																								
R33																								
R34	310	312	316	317	320	321	322	323	325															
R35	301	303	304	305	307	308	309	310	312	316	317	320	321	323	325									
R36	311	313	314	315	323	324	325																	
R37	311	312	313	314	315	319	320	321	324															
R38	298	302	303	304	305	306	307	309	311	313	314	316	318	319	320	321	322	324	325					
R39	298	299	300	301	302	303	304	305	308	311	314	315	316	319	320	321	322	323	325					
R40																								
R41	304	309	310	311	312	313	315	319	320	321	322	324	325											
R42	276	278	283	287	288	290	293	295	296	299	300	301	302	303	307	309	312	316	319	320	321			
R43																								
R44	302	304	306	310	311	313	314	315	316	317	318	320	321	322	325									
R45	325																							
R46																								
R47																								
R48	318	319	324																					
R49	310	311	312	313	314	315	317	320	321															
R50	324																							
R51																								
R52	317	318	320	321	324																			
R53																								
R54	303	304	306	309	310	311	314	316	317	319	320	321	323	324	325									
R55	320	321	323																					
R56																								
R57	302	304	305	310	316	317	321	322	323	324	325													
R58	318	321	323																					
R59																								
R60	309	311	313	314	315	316	325																	

Copyright © 2005 IEEE. All rights reserved.
This is an unapproved draft, subject to change

Table 55A–4—P matrix: location 73 to 96

	C73	C74	C75	C76	C77	C78	C79	C80	C81	C82	C83	C84	C85	C86	C87	C88	C89	C90	C91	C92	C93	C94	C95	C96
R61	285	286	287	293	298	301	302	303	304	305	308	310	313	314	315	316	321	322	323	324	325			
R62																								
R63																								
R64	307	309	313	315	316	319	320	322	325															
R65																								
R66	296	297	300	301	302	306	307	308	311	314	315	317	318	319	320	321	322	323	325					
R67	296	299	302	303	304	308	309	310	311	314	316	324	325											
R68	325																							
R69	321	322	325																					
R70	305	308	309	311	312	313	315	316	319	321	322	324	325											
R71	314	315	317	318	321																			
R72																								
R73	319	320	321	323	324																			
R74	312	313	314	315	316	317	318	319	320	322	324													
R75																								
R76																								
R77	325																							
R78	301	302	304	305	306	308	310	311	313	314	315	318	319	320	323	324	325							
R79	279	280	282	286	287	289	292	297	299	300	301	302	303	304	306	308	310	322	324					
R80	316	317	319	320	321	322	323																	
R81	319																							
R82	305	306	307	308	309	312	315	316	318	319	323													
R83	297	298	301	302	303	304	306	309	311	312	316	319	320	321	322	324	325							
R84	260	261	262	264	265	266	269	272	273	274	275	276	277	278	279	285	286	287	289	290	291	303	306	308
R85	302	304	306	308	310	314	320																	
R86																								
R87	302	303	304	305	313	316	317	321	322															
R88	312	314	315	316	317	320	321	322	325															
R89	314	315	316	321	322																			
R90	296	297	300	301	303	304	310	311	313	316	319													
R91	302	305	306	311	317	318	322	323	324															
R92	308	311	312	313	314	315	318	319	323	324	325													
R93																								
R94	324																							
R95	296	297	301	302	303	304	306	307	308	311	312	317	318	320	324									
R96	320	323	325																					
R97																								
R98	308	309	310	316	317	318	319	320	321	324	325													
R99																								
R100	303	304	305	306	308	311	312	313	315	316	319	320	321	323	324									
R101	315	317	319																					
R102	312	316	317	319	320	324	325																	
R103	309	315	317	318	319	320	321																	
R104	288	289	290	291	292	294	295	297	299	300	301	306	307	308	311	314	315	316	318	320	322	323	325	
R105	303	307	312	314	317	319	322																	
R106	304	305	306	307	310	316	317	323	325															
R107	314	315	316	317	319	320	321	322	324															
R108																								
R109	288	289	290	291	294	295	296	297	298	299	300	301	307	311	312	314	318	319	321	322	323	324	325	
R110	317	322	325																					
R111																								
R112	317	318	320																					
R113																								
R114	297	298	300	302	304	308	309	312	314	316	317	320	321											
R115	315	316	318	324	325																			
R116																								
R117	248	249	257	258	261	263	264	266	267	268	270	272	274	275	276	278	280	281	282	285	286	287	288	291
R118	305	308	309	310	313	315	317	320	322	324	325													
R119	313	316	319	322	323																			
R120																								

Copyright © 2005 IEEE. All rights reserved.
This is an unapproved draft, subject to change

Table 55A–4—P matrix: location 73 to 96

	C73	C74	C75	C76	C77	C78	C79	C80	C81	C82	C83	C84	C85	C86	C87	C88	C89	C90	C91	C92	C93	C94	C95	C96
R121	298	299	305	306	308	309	311	316	322															
R122	306	307	310	314	315	322	323	324	325															
R123																								
R124	325																							
R125	297	298	300	302	303	307	308	309	310	313	314	315	318	319	320	321	322							
R126	323																							
R127	300	301	303	305	306	310	313	314	315	316	317	318	319	323	324									
R128																								
R129																								
R130	296	302	305	309	312	313	314	315	317	320	321	322	323	324	325									
R131	289	290	294	295	298	299	300	303	306	307	308	309	310	315	316	317	318	319	320	323	324			
R132																								
R133	286	288	289	293	296	298	299	301	303	306	308	310	316	317	318	320	323	324	325					
R134	284	287	288	290	291	296	301	305	307	308	311	312	314	315	316	317	318	322	324					
R135	324																							
R136																								
R137	318	321	322	323	325																			
R138	301	302	305	306	307	309	310	311	312	315	319	323	324											
R139	314	316	317	319	322	323	325																	
R140																								
R141	317	318	320	321	324																			
R142																								
R143	311	314	317	318	319																			
R144	297	300	301	305	309	315	316	317	320	321	322													
R145																								
R146																								
R147																								
R148																								
R149	298	299	300	303	304	305	309	311	312	314	315	316	325											
R150	321	322	323																					
R151																								
R152	321	322	323	324	325																			
R153																								
R154																								
R155																								
R156	306	307	308	309	312	313	314	315	316	319	321	322	324											
R157	320	321	323																					
R158	319	321	323	324	325																			
R159																								
R160	324																							
R161	313	317	322																					
R162	292	293	295	296	297	299	303	309	311	312	313	316	319	322	325									
R163																								
R164	289	291	292	295	299	301	302	304	307	308	310	312	313	314	316	317	319	320	321	323	325			
R165	309	310	311	313	315	317	319	320	322	323	324													
R166	303	305	306	310	311	312	313	314	316	318	320	324	325											
R167	309	310	311	313	314	317	320	322	323															
R168																								
R169																								
R170	307	308	309	311	312	314	316	317	318	320	323													
R171	295	296	301	302	304	305	309	310	311	312	313	314	315	316	317	318	321	322	325					
R172	322	323	324																					
R173	305	306	308	310	311	313	314	315	316	321	322	324	325											
R174	324																							
R175	315	317	318	321	323																			
R176																								
R177																								
R178	297	298	299	300	301	303	304	306	307	308	309	310	314	315	316	320	321	324	325					
R179	310	312	313	314	315	317	318	319	320	324	325													
R180	305	306	307	309	311	318	319	321	322	323	325													

Copyright © 2005 IEEE. All rights reserved.
This is an unapproved draft, subject to change

Table 55A–4—P matrix: location 73 to 96

	C73	C74	C75	C76	C77	C78	C79	C80	C81	C82	C83	C84	C85	C86	C87	C88	C89	C90	C91	C92	C93	C94	C95	C96
R181	285	289	292	295	299	301	303	306	307	308	309	314	315	318	324									
R182																								
R183																								
R184																								
R185																								
R186	316	317	319	320	321	322	323	324	325															
R187	301	304	305	306	308	311	314	315	316	317	318	319	320	321	323									
R188	307	308	311	314	320	323	324																	
R189																								
R190	265	267	269	270	275	277	281	283	285	286	287	288	289	291	292	295	297	298	300	303	304	307	308	317
R191	319																							
R192	286	289	291	294	296	297	298	299	300	302	304	305	306	307	308	309	310	314	315	316	317	318	320	321
R193																								
R194	298	301	304	306	307	308	311	312	314	319	321	323	325											
R195	272	273	274	276	278	279	280	281	283	284	287	288	289	291	293	294	297	300	301	303	305	306	308	313
R196	305	306	307	310	312	317	319	321	323															
R197																								
R198	306	308	312	316	320	324	325																	
R199	299	300	303	306	307	309	312	314	316	317	321	322	324											
R200																								
R201	311	315	317	319	325																			
R202	296	297	302	303	304	306	307	308	309	311	314	316	320	321	324									
R203	283	285	286	291	295	296	298	300	305	307	308	310	311	312	313	314	315	316	318	319	321	324	325	
R204																								
R205	298	299	300	301	303	305	306	308	309	310	311	313	314	315	317	320	321							
R206	287	292	294	295	300	301	309	313	315	316	317	319	320	322	323									
R207	321	323	324																					
R208	300	301	302	303	307	308	310	313	314	316	318													
R209																								
R210	293	294	298	300	303	304	305	306	308	309	310	311	312	313	314	315	320	324	325					
R211																								
R212																								
R213	325																							
R214	324																							
R215																								
R216	300	301	302	304	305	308	309	310	311	314	316	317	320	321	322	323	325							
R217	294	295	296	299	300	301	302	305	306	307	308	310	313	317	319	320	321							
R218																								
R219	298	299	301	302	305	308	312	313	317	319	320	322	324											
R220	292	293	296	298	299	300	301	302	303	304	312	313	316	317	319	321	323	324	325					
R221																								
R222																								
R223																								
R224	294	296	297	300	303	305	310	313	317	318	320	322	325											
R225	301	303	304	305	306	309	310	311	313	315	316	317	318	319	320	322	323	324	325					
R226	269	270	273	279	280	282	285	287	289	290	292	293	294	295	296	297	298	301	302	306	308	309	311	312
R227	321	323	325																					
R228																								
R229	319	322	325																					
R230																								
R231	311	313	315	317	319	320	322	323	325															
R232	301	302	306	307	308	309	312	313	314	315	316	317	320	323	324									
R233	303	304	305	306	307	308	310	311	313	314	315	319	320	321	322	323	324							
R234																								
R235	280	282	285	286	290	291	293	294	295	296	297	298	299	300	304	305	306	307	315	316	318	319	320	321
R236	307	308	310	311	312	314	320	323	324															
R237	276	277	278	284	285	287	288	290	292	293	297	302	304	306	307	308	310	313	314	315	316	317	320	321
R238																								
R239																								
R240																								

Copyright © 2005 IEEE. All rights reserved.
This is an unapproved draft, subject to change

Table 55A–4—P matrix: location 73 to 96

	C73	C74	C75	C76	C77	C78	C79	C80	C81	C82	C83	C84	C85	C86	C87	C88	C89	C90	C91	C92	C93	C94	C95	C96
R241	311	312	316	318	323																			
R242	325																							
R243																								
R244	295	298	299	301	306	307	309	313	317	318	319	320	324											
R245	296	299	300	302	307	312	315	316	317	318	319	321	325											
R246	320	322	323																					
R247	313	314	315	317	324																			
R248	295	297	301	303	304	305	307	313	315	316	317	320	323	324	325									
R249	306	307	309	313	315	318	322																	
R250	298	299	303	304	305	306	307	308	310	312	313	315	319	321	325									
R251	312	314	315	317	319	322	324																	
R252																								
R253	298	299	300	301	304	305	307	308	309	310	311	312	315	319	321	324	325							
R254																								
R255	285	286	288	289	295	296	297	299	302	304	305	307	308	309	311	312	313	317	320	321	323			
R256	283	285	286	288	291	292	294	295	297	301	303	304	305	306	307	308	310	311	314	317	318	321	322	
R257	285	287	289	290	292	294	295	297	300	303	304	308	309	313	314	316	317	321	323					
R258	297	298	300	302	303	311	314	315	316	321	323	324	325											
R259	322	323	324																					
R260	325																							
R261																								
R262	271	272	273	274	275	276	277	278	280	281	283	286	287	288	289	291	293	294	297	298	302	304	305	306
R263	320																							
R264																								
R265	308	311	312	314	315	316	317	318	319	320	321	324	325											
R266	322	323	324																					
R267																								
R268	272	274	276	277	278	279	280	283	284	285	286	287	288	290	292	295	296	297	299	300	306	307	311	315
R269																								
R270	325																							
R271																								
R272	306	307	308	309	311	312	313	317	318	320	321	322	324											
R273	309	313	315	317	319	321	325																	
R274																								
R275																								
R276																								
R277	311	313	314	316	317	318	319	320	323															
R278	299	303	304	305	307	309	310	311	312	313	316	317	319	322	323									
R279	301	306	310	315	318	321	325																	
R280	306	307	309	311	312	315	317	319	320	321	323													
R281																								
R282	300	301	302	303	304	306	307	308	309	313	316	318	319	322	324									
R283	290	291	292	295	296	297	298	301	303	305	306	307	308	310	311	313	315							
R284	302	304	305	306	308	310	314	317	318	320	322	323	324											
R285	283	284	285	286	287	290	295	296	297	298	300	302	303	305	308	309	311	313	314	315	318	319	320	323
R286																								
R287	308	311	313	316	319	321	325																	
R288	318	320	322	324	325																			
R289	306	307	314	317	318	319	320	321	323	324	325													
R290	324																							
R291																								
R292	324																							
R293	315	318	319	322	324																			
R294	301	302	304	307	308	310	311	312	314	316	317	318	319	320	321	322	324							
R295																								
R296	276	278	279	281	285	288	290	292	293	295	296	297	298	299	300	301	303	304	308	309	314	316	317	319
R297																								
R298	314	315	318	319	322	323	325																	
R299	287	289	293	295	296	298	300	301	302	304	305	306	308	310	311	314	316	317	320	322	323			
R300	313	316	317	321	323																			

Copyright © 2005 IEEE. All rights reserved.
This is an unapproved draft, subject to change

Table 55A–4—P matrix: location 73 to 96

	C73	C74	C75	C76	C77	C78	C79	C80	C81	C82	C83	C84	C85	C86	C87	C88	C89	C90	C91	C92	C93	C94	C95	C96
R301	298	299	300	301	302	307	309	313	317	319	321	322	323	324	325									
R302																								
R303	302	304	306	308	309	312	314	315	316	319	320	323	325											
R304	309	311	314	316	317	318	319	320	321	324	325													
R305	302	303	304	305	306	310	316	317	319	321	324													
R306	307	308	309	310	311	312	313	314	315	316	318	319	320	321	324									
R307	270	277	279	281	283	286	287	290	291	292	294	299	304	305	306	307	309	310	312	313	314	316	322	324
R308																								
R309																								
R310	321																							
R311																								
R312	321																							
R313																								
R314	295	296	300	301	304	305	312	316	318	320	321	324	325											
R315	287	288	290	291	294	295	296	297	298	299	301	306	313	317	321	324	325							
R316	295	297	300	302	306	307	308	309	310	313	316	317	319	321	322	324	325							
R317																								
R318	306	307	308	309	310	312	313	314	315	317	319	320	323	324	325									
R319	321	322	323																					
R320	315	316	318	319	323	324	325																	
R321	315	316	317	320	323	324	325																	
R322	324																							
R323																								
R324	313	318	321	322	325																			
R325	315	319	320	321	324																			
R326	298	300	302	303	305	306	307	309	313	315	317	319	320	321	325									
R327	277	279	281	283	284	285	288	289	290	292	297	298	300	302	305	307	308	310	311	312	313	316	321	322
R328	297	299	301	304	306	307	308	310	311	313	314	317	324											
R329	299	301	307	308	310	318	319	320	321	322	325													
R330	310	312	313	316	320	322	324																	
R331	315	318	320	322	323																			
R332																								
R333																								
R334	310	312	313	315	316	318	320	321	323															
R335	312	314	315	317	318	321	322	323	324															
R336	291	293	294	296	297	298	299	300	304	305	306	309	310	311	312	313	314	316	317	318	319	320	325	
R337	310	311	312	314	316	317	318	322	324															
R338	294	295	298	305	306	308	309	310	313	315	316	317	318	321	322	323	324							
R339	320	322	323																					
R340	296	297	299	300	301	303	304	305	306	307	308	310	312	317	318	319	320	323	325					
R341	294	295	298	299	300	302	303	304	305	306	307	308	309	310	312	313	316	317	320	322	324			
R342	310	311	313	314	317	318	319	321	322	323	324													
R343	298	300	301	302	304	306	308	310	312	313	316	320	321	324	325									
R344																								
R345	307	308	311	312	313	317	318	319	320	321	323													
R346																								
R347	311	313	314	319	320	321	323	324	325															
R348																								
R349	279	283	284	285	286	287	290	294	295	296	297	298	300	302	303	304	306	308	309	310	311	312	313	316
R350	283	284	285	286	289	290	292	293	295	296	297	298	299	304	305	306	307	308	309	310	312	314	318	321
R351																								
R352	321	322	324																					
R353																								
R354	312	314	315	316	317	318	319	320	322	324	325													
R355	314	315	318	319	322	324	325																	
R356	323																							
R357	280	281	283	287	288	289	290	294	295	297	298	299	302	304	305	307	308	309	314	315	318	320	321	322
R358	298	300	301	302	303	304	305	307	308	309	310	311	314	316	317	320	321	322	324					
R359																								
R360																								

Copyright © 2005 IEEE. All rights reserved.
This is an unapproved draft, subject to change

Table 55A–4—P matrix: location 73 to 96

	C73	C74	C75	C76	C77	C78	C79	C80	C81	C82	C83	C84	C85	C86	C87	C88	C89	C90	C91	C92	C93	C94	C95	C96
R361																								
R362																								
R363																								
R364	306	311	314	315	316	317	318	319	320	322	324													
R365																								
R366																								
R367	325																							
R368	288	291	292	293	294	295	297	298	304	305	310	317	321	323	324									
R369	301	304	310	311	314	315	317	321	323															
R370	296	298	299	300	301	304	308	311	312	313	314	321	325											
R371	293	297	298	300	304	305	306	308	309	311	314	316	321	323	324									
R372	301	302	306	308	309	311	313	314	316	317	320	321	322	323	325									
R373																								
R374	285	286	288	289	292	293	294	295	296	297	303	305	306	309	313	319	320	321	325					
R375																								
R376	310	311	312	313	314	315	317	319	324															
R377																								
R378	309	312	317	319	320	323	325																	
R379																								
R380																								
R381	284	288	291	292	293	294	300	301	304	305	307	309	312	314	315	318	319	320	321	322	323			
R382																								
R383																								
R384	308	310	313	315	316	319	320	321	322															
R385																								
R386	285	289	292	293	300	301	302	303	306	309	310	311	316	319	320	321	324							
R387	323																							
R388	299	301	303	304	309	311	313	314	315	317	318	319	320	322	324									
R389																								
R390	307	309	310	311	314	317	318	320	321															
R391																								
R392	319	322	324																					
R393	310	312	315	317	318	320	321	322	324															
R394	310	311	312	313	315	316	320	321	325															
R395	323																							
R396	300	308	310	314	317	318	321	323	325															
R397	279	280	281	283	285	286	287	288	290	292	296	299	300	301	302	303	304	309	313	314	315	316	317	319
R398	324																							
R399	324																							
R400	320	322	323	324	325																			
R401																								
R402	299	300	301	303	304	311	312	314	315	316	318	320	323	324	325									
R403	303	305	306	309	310	311	318	320	321	322	325													
R404	322																							
R405	291	292	299	304	307	308	309	310	311	315	316	317	318	322	325									
R406																								
R407																								
R408	299	300	302	312	314	315	317	319	320	321	323	324	325											
R409																								
R410	318	319	320	321	322	323	325																	
R411	292	294	295	302	303	305	307	308	313	314	317	321	322	324	325									
R412																								
R413	317	320	321	322	324																			
R414																								
R415																								
R416	324																							
R417																								
R418	300	301	302	303	305	309	312	314	316	317	318	319	320	321	323									
R419	325																							
R420																								

Copyright © 2005 IEEE. All rights reserved.
This is an unapproved draft, subject to change

Table 55A–4—P matrix: location 73 to 96

	C73	C74	C75	C76	C77	C78	C79	C80	C81	C82	C83	C84	C85	C86	C87	C88	C89	C90	C91	C92	C93	C94	C95	C96
R421	320																							
R422																								
R423	300	302	303	304	307	308	310	311	312	313	314	316	319	320	324									
R424																								
R425	299	300	302	304	305	308	310	311	312	313	315	318	319	320	322									
R426	322	324	325																					
R427	316	317	321	322	324																			
R428	311	312	314	316	317	319	321	324	325															
R429	319	322	325																					
R430	305	308	310	311	314	315	316	318	320	321	324													
R431																								
R432	297	299	302	303	304	305	308	309	310	312	315	316	317	318	322									
R433	325																							
R434	276	278	279	281	282	283	286	287	288	289	292	293	294	295	298	300	303	305	306	308	310	312	313	314
R435																								
R436	307	308	310	311	313	314	315	316	317	318	319	322	325											
R437																								
R438	296	299	304	305	306	307	311	312	316	320	325													
R439																								
R440	293	295	296	299	302	304	306	309	310	311	312	313	317	318	319	320	321	323	324					
R441	320	321	322																					
R442	306	308	310	311	313	314	317	318	319	321	322	323	325											
R443	298	300	301	302	305	306	309	313	314	316	318	319	320	322	325									
R444	318	319	321	322	325																			
R445	282	283	284	287	290	291	293	294	295	296	297	299	306	307	313	317	318	322	323	324	325			
R446	315	316	322																					
R447	277	278	279	280	282	285	286	287	288	292	294	297	298	301	305	308	310	312	313	316	317	320	321	323
R448																								
R449																								
R450	298	300	301	303	309	314	316	317	319	320	321	324	325											
R451																								
R452	312	313	317	319	320	323	325																	
R453																								
R454	324																							
R455	277	278	279	280	282	284	288	289	290	291	292	293	295	296	297	306	308	310	311	314	316	317	320	321
R456	316	318	319	320	321	322	323	324	325															
R457	322	323	325																					
R458																								
R459	306	307	309	310	311	314	316	318	320	321	323	324	325											
R460	322	324	325																					
R461																								
R462	294	295	296	297	299	300	302	303	304	305	308	309	310	312	313	314	317	319	320	322	323			
R463	302	304	307	310	311	312	313	315	318	319	320													
R464	275	276	277	279	284	286	289	290	291	293	299	300	302	304	306	308	309	310	317	318	320			
R465	322	323	325																					
R466	304	305	306	308	312	313	314	316	319	323	324													
R467	314	315	316	317	321	324	325																	
R468	280	281	282	283	286	290	292	293	297	299	300	301	303	304	306	307	310	312	322	323	324			
R469	296	298	299	300	305	306	307	309	312	313	314	316	317	321	323									
R470	323																							
R471	315	318	319	320	321																			
R472	285	287	288	290	291	293	295	296	297	298	301	302	304	306	307	314	315	316	317	319	321	323	324	
R473																								
R474	305	308	309	312	313	316	318	319	320	321	323	324	325											
R475	320	323	324																					
R476	296	298	299	300	305	306	307	308	312	314	315	317	321	322	325									
R477	295	296	297	300	304	308	310	311	312	313	314	315	317	318	320	322	325							
R478																								
R479																								
R480																								

Copyright © 2005 IEEE. All rights reserved.
This is an unapproved draft, subject to change

Table 55A–4—P matrix: location 73 to 96

	C73	C74	C75	C76	C77	C78	C79	C80	C81	C82	C83	C84	C85	C86	C87	C88	C89	C90	C91	C92	C93	C94	C95	C96
R481	324																							
R482	297	298	299	300	303	306	307	309	315	317	318	319	320	321	322									
R483	303	306	308	310	311	313	314	316	317	318	319	324	325											
R484																								
R485	284	285	286	289	290	292	294	296	297	298	299	301	303	305	307	308	312	313	318	319	322			
R486	324																							
R487	288	291	292	293	295	296	297	301	302	303	306	307	308	310	311	313	314	315	317	320	323	324	325	
R488																								
R489	310	311	312	314	315	317	318	323	325															
R490	298	299	301	306	308	309	311	313	314	315	320													
R491																								
R492																								
R493	321	322	324																					
R494																								
R495	283	285	286	288	289	292	295	297	300	304	305	306	307	308	309	310	315	316	317	319	320	321	324	
R496	310	311	313	314	315	316	318	324	325															
R497	305	306	309	311	313	317	318	321	322	323	324													
R498	313	316	318	319	322																			
R499	287	288	289	290	292	294	295	297	303	305	306	307	309	310	317	318	319	321	324					
R500	272	273	274	276	278	279	282	284	287	288	290	291	293	294	296	297	298	299	300	301	302	305	306	309
R501																								
R502	307	308	311	312	313	314	315	321	324															
R503																								
R504	285	286	288	289	290	291	293	295	296	297	304	305	315	316	318	319	321	322	323					
R505	325																							
R506	304	307	308	309	310	313	315	316	317	320	321	322	323											
R507																								
R508	295	296	300	305	307	309	310	311	312	313	314	318	320	322	323									
R509	323	324	325																					
R510	289	290	293	295	296	297	298	299	300	303	304	305	306	307	309	310	312	314	315	317	321			
R511	313	316	317	318	319	321	325																	
R512	304	305	306	309	310	311	312	313	314	315	318	319	320											
R513	294	296	300	301	302	307	309	312	314	315	318	319	320	321	323									
R514	299	300	302	303	304	309	310	312	313	315	317	319	320	321	322									
R515	305	308	310	319	320	321	322	323	325															
R516																								
R517	316	317	318	319	320	324	325																	
R518																								
R519	301	302	304	306	307	312	314	316	318	319	320	321	322											
R520	293	296	297	300	303	305	308	309	311	313	315	321	323	324	325									
R521	297	298	301	302	305	306	307	309	314	316	317	319	321	323	324									
R522																								
R523	297	300	301	302	306	308	309	310	311	313	314	316	321	323	324									
R524	300	301	306	307	308	309	310	312	313	316	317	318	322	324	325									
R525	314	316	317	318	319	322	323	324	325															
R526	305	307	308	312	313	319	320																	
R527	277	278	281	283	287	290	291	299	300	301	303	309	311	313	315	319	320	321	323					
R528	305	309	311	312	313	316	319	320	321	323	324													
R529																								
R530																								
R531	307	311	312	314	318	319	321	324	325															
R532																								
R533																								
R534	312	314	316	318	320	324	325																	
R535	281	282	284	286	288	289	290	291	293	295	297	298	299	301	311	317	323							
R536	288	290	295	296	297	298	300	301	302	303	306	307	308	309	312	313	315	316	319	321	323	324	325	
R537	301	303	307	310	311	312	313	314	316	317	318	319	321	322	323									
R538	308	309	316	318	319	320	321	324	325															
R539																								
R540	292	293	297	300	302	303	309	313	315	317	318	319	320											

Copyright © 2005 IEEE. All rights reserved.
This is an unapproved draft, subject to change

Table 55A–4—P matrix: location 73 to 96

	C73	C74	C75	C76	C77	C78	C79	C80	C81	C82	C83	C84	C85	C86	C87	C88	C89	C90	C91	C92	C93	C94	C95	C96
R541	324																							
R542	289	294	297	303	307	309	310	312	314	317	320													
R543	321	322	323																					
R544	308	311	313	314	315	318	319	323	325															
R545																								
R546	313	314	317	318	319	322	323	324	325															
R547	283	284	285	286	287	289	292	293	297	298	299	300	301	302	305	315	316	317	318	319	321	323	325	
R548	296	298	302	304	305	306	308	309	314	317	318	321	324											
R549	311	312	314	315	317	319	320	322	323															
R550																								
R551	306	311	312	314	318	319	320	322	323	324	325													
R552																								
R553	304	306	307	310	311	313	315	321	322	323	325													
R554	288	290	296	298	304	307	310	311	313	314	315	317	318	319	321	322	323							
R555	305	307	311	312	313	314	316	317	318	321	324													
R556	322	323	324																					
R557	291	292	293	298	301	304	305	307	308	309	311	313	314	316	317	321	324							
R558	286	287	289	290	292	293	296	297	299	300	302	304	310	311	314	315	316	317	319	321	323	324	325	
R559	294	298	301	303	304	307	308	311	312	314	315	319	323	324	325									
R560	301	302	303	304	307	308	309	310	311	313	314	315	316	319	321									
R561																								
R562																								
R563																								
R564																								
R565	313	317	321	324	325																			
R566																								
R567																								
R568	313	315	316	318	321	322	324																	
R569																								
R570	293	294	295	296	297	298	299	304	307	309	312	317	318	319	320	321	323							
R571																								
R572																								
R573	284	287	288	291	292	293	297	303	306	307	309	312	320	321	324									
R574																								
R575	307	310	312	313	319	321	322	323	325															
R576	262	267	268	271	273	275	283	286	287	291	294	295	298	300	301	302	305	306	308	310	311	312	314	316
R577																								
R578	310	313	316	319	320	321	323	324	325															
R579	311	312	313	316	317	318	319	320	323	324	325													
R580	317	318	319	324	325																			
R581	310	314	316	321	324																			
R582	295	300	301	304	307	309	310	311	312	313	316	318	319	320	321	322	325							
R583	297	298	299	303	305	306	309	311	312	314	319	322	324											
R584	294	295	297	298	299	301	304	305	307	308	311	312	314	315	316	317	320	321	323					
R585																								
R586																								
R587	311	312	313	315	317	320	322	324	325															
R588																								
R589	300	301	302	308	314	316	317	318	319	321	325													
R590																								
R591	289	290	291	293	295	296	297	298	299	301	303	305	310	311	312	314	319	320	321	322	324			
R592	298	299	300	302	304	309	311	314	315	319	320	322	325											
R593	277	278	279	284	286	287	292	293	294	295	297	298	299	300	301	303	304	305	307	309	310	311	312	314
R594	302	306	307	309	310	315	317	320	323															
R595	308	309	310	312	317	321	322																	
R596	290	292	300	301	302	304	306	307	308	310	311	313	314	316	320	321	323							
R597	319	321	322	323	325																			
R598	301	303	304	305	306	307	310	314	315	316	322													
R599																								
R600	302	304	305	306	307	309	312	318	319	321	325													

Copyright © 2005 IEEE. All rights reserved.
This is an unapproved draft, subject to change

Table 55A–4—P matrix: location 73 to 96

	C73	C74	C75	C76	C77	C78	C79	C80	C81	C82	C83	C84	C85	C86	C87	C88	C89	C90	C91	C92	C93	C94	C95	C96
R601	310	311	314	315	317	318	319	320	322	323	324													
R602																								
R603	319	321	322																					
R604	300	301	303	306	310	312	313	315	316	318	321	322	325											
R605	322	323	324																					
R606	293	294	295	296	297	303	305	307	308	311	312	313	315	317	321	322	324							
R607	299	301	302	303	304	310	312	314	320	322	325													
R608	313	315	316	319	321	322	323	324	325															
R609	297	300	301	303	304	306	309	310	311	315	316	317	320	323	325									
R610																								
R611	322	324	325																					
R612	296	297	298	299	303	304	309	311	313	314	320	321	322											
R613	290	291	292	293	294	296	297	298	299	300	301	306	307	310	311	314	315	316	317					
R614	305	306	307	308	310	312	313	315	316	318	320	323	325											
R615	303	304	306	308	311	315	317	318	324															
R616	282	283	292	293	294	296	299	300	301	302	304	305	306	307	308	310	311	312	313	315	317	318	319	321
R617	315	316	322	324	325																			
R618	321	322	323	324	325																			
R619	303	304	305	307	311	312	314	315	316	317	318	319	320											
R620	308	312	313	314	316	318	320	322	325															
R621	323																							
R622	301	302	304	305	308	309	313	316	320	321	322	323	325											
R623																								
R624																								
R625	294	295	296	297	300	301	303	304	305	306	308	310	312	315	321	322	324							
R626																								
R627																								
R628	294	295	296	297	301	302	304	306	309	311	316	318	322	323	324									
R629	288	289	292	294	296	302	303	304	306	308	310	311	313	314	315	316	318	321	322	324	325			
R630	317	318	319	320	321	323	325																	
R631	300	302	303	305	307	314	315	318	324															
R632																								
R633																								
R634	285	286	288	291	293	294	296	299	300	303	306	307	309	313	315	317	319	321	325					
R635																								
R636	309	311	312	314	317	318	320	324	325															
R637	272	273	274	276	277	278	280	281	282	284	285	287	290	292	293	294	296	297	299	300	301	302	307	312
R638																								
R639	285	286	287	290	294	296	297	300	301	303	304	306	307	308	310	312	315	316	318	320	324			
R640																								
R641	262	266	268	271	272	273	274	275	276	279	280	281	283	284	287	289	290	291	293	295	298	299	302	304
R642	325																							
R643	308	309	312	313	315	316	317	319	322															
R644	280	281	283	285	286	287	289	297	298	299	302	305	307	311	312	314	316	317	318	319	320	321	325	
R645	287	288	290	292	294	296	301	302	304	306	307	310	311	313	314	317	319	321	322					
R646	320	322	323	324	325																			
R647	286	288	289	291	292	293	294	297	299	300	301	302	304	305	306	307	310	311	312	313	317	319	321	323
R648	324																							
R649	293	295	296	298	303	304	306	309	310	315	316	318	320	322	325									
R650	306	309	312	317	318	320	325																	
R651	325																							
R652																								
R653	280	281	285	288	293	298	299	302	303	307	308	310	316	317	319	320	322	323	325					
R654	298	299	301	311	312	319	321	322	325															
R655	300	301	302	303	304	306	308	309	310	311	312	314	316	317	318	319	323	324	325					
R656	288	292	293	296	297	298	299	302	304	305	307	308	310	313	323	324	325							
R657																								
R658																								
R659	295	297	300	301	303	309	311	312	314	315	318	321	322											
R660	278	279	280	283	285	286	287	289	290	291	295	298	301	304	308	309	312	313	314	318	320	321	325	

Copyright © 2005 IEEE. All rights reserved.
This is an unapproved draft, subject to change

Table 55A–4—P matrix: location 73 to 96

	C73	C74	C75	C76	C77	C78	C79	C80	C81	C82	C83	C84	C85	C86	C87	C88	C89	C90	C91	C92	C93	C94	C95	C96
R661	269	270	271	272	274	275	276	278	279	281	283	289	291	293	294	296	298	299	302	303	305	307	308	309
R662																								
R663	299	300	302	304	306	307	308	309	310	313	320	321	322											
R664	325																							
R665																								
R666	324																							
R667																								
R668	325																							
R669																								
R670	304	306	307	310	311	314	316	320	321	322	323	324	325											
R671																								
R672	273	274	276	279	281	284	286	288	289	290	292	294	297	298	299	302	306	308	311	312	315	317	321	324
R673	306	307	308	311	312	314	317	318	320	322	323	324	325											
R674	296	297	298	301	303	304	306	308	309	310	311	313	317	319	320	321	323	324	325					
R675																								
R676	315	316	317	319	322	323	324																	
R677	282	284	287	288	289	290	292	293	297	299	302	304	310	312	313	314	316	317	321					
R678	312	313	314	319	321	323	324																	
R679	325																							
R680																								
R681	285	286	288	289	290	292	294	295	296	299	302	303	310	311	312	313	315	317	319	323	325			
R682	281	283	285	286	290	292	293	294	295	297	299	302	303	304	307	309	312	314	316	318	319	321	322	323
R683																								
R684																								
R685																								
R686	317	318	320	321	325																			
R687	298	300	301	304	305	308	311	312	316	317	318	322	325											
R688																								
R689	322	323	325																					
R690	293	295	296	297	298	299	300	306	307	310	311	314	316	317	318	319	321	322	325					
R691	297	300	301	303	304	306	310	311	314	315	318	319	321	322	323	324	325							
R692	303	305	307	308	312	313	315	316	317	322	325													
R693	303	304	305	306	307	311	312	315	316	318	320	322	325											
R694	289	292	293	294	299	301	302	306	307	308	316	317	318	319	320	321	324							
R695	314	315	316	318	319	320	322	324	325															
R696	316	317	318	320	322	324	325																	
R697	319	321	325																					
R698	321	323	324																					
R699	310	314	316	317	319																			
R700	306	307	308	314	315	316	317	321	325															
R701	318	319	320	322	325																			
R702																								
R703																								
R704	299	300	301	302	303	304	308	309	310	312	315	316	317	318	319	323	324							
R705	303	305	307	308	309	310	317																	
R706																								
R707																								
R708	298	302	303	304	306	307	308	309	310	312	314	315	316	317	319									
R709																								
R710	314	315	316	318	319	320	321																	
R711	324																							
R712	276	277	278	279	280	282	283	284	290	292	298	299	300	301	304	305	312	317	318	319	320	321	322	323
R713	325																							
R714	302	307	310	312	316	317	321																	
R715	306	308	310	314	315	319	320	321	323	324	325													
R716	267	270	271	272	273	274	276	278	285	286	290	293	294	296	297	298	302	307	308	310	311	316	319	320
R717																								
R718																								
R719																								
R720	290	291	292	294	295	296	303	304	308	313	315	316	317	318	325									

Copyright © 2005 IEEE. All rights reserved.
This is an unapproved draft, subject to change

Table 55A–4—P matrix: location 73 to 96

	C73	C74	C75	C76	C77	C78	C79	C80	C81	C82	C83	C84	C85	C86	C87	C88	C89	C90	C91	C92	C93	C94	C95	C96
R721	289	293	294	295	296	298	300	301	302	304	306	307	309	310	312	317	320	321	322	323	325			
R722	297	298	301	303	304	307	308	311	312	313	314	315	318	321	325									
R723																								
R724																								
R725	323																							
R726	310	311	312	314	315	316	317	318	321	322	323													
R727	301	302	303	304	305	308	310	311	312	313	314	315	318	320	321	322	323	324	325					
R728	320	321	323	324	325																			
R729																								
R730	313	315	316	320	321	322	324																	
R731																								
R732	288	291	293	296	299	300	302	303	304	305	309	310	314	315	318	320	322	323	325					
R733	316	318	319	322	323																			
R734																								
R735																								
R736	308	311	314	315	318	319	322	323	324															
R737	301	304	307	309	313	317	318	320	322	323	324													
R738	287	288	289	291	292	297	300	303	304	306	307	308	310	311	315	316	319	320	321	324	325			
R739																								
R740	276	277	278	281	282	283	285	287	288	289	291	294	295	303	305	308	313	314	318	319	320	323	325	
R741	325																							
R742	306	307	309	311	312	313	314	315	316	319	320	322	325											
R743	307	308	314	318	319	321	324																	
R744																								
R745	315	318	320	321	322	324	325																	
R746	311	314	315	316	317	318	319	322	323															
R747																								
R748	300	302	305	306	309	312	313	314	315	316	318	319	320	322	323	324	325							
R749	292	295	297	298	301	302	304	305	310	311	312	316	317	318	319	320	321							
R750	312	315	318	321	322	324	325																	
R751	283	286	290	291	292	294	296	297	300	301	303	304	305	307	310	311	314	315	320	321	323	324	325	
R752																								
R753																								
R754																								
R755	289	292	293	295	299	300	302	308	309	311	312	314	316	319	323									
R756	322	323	324																					
R757																								
R758	315	316	318	319	320	322	323																	
R759	317	320	321	324	325																			
R760	325																							
R761																								
R762	304	307	309	311	313	320	323																	
R763	305	306	307	311	312	313	315	317	319	322	325													
R764	320	321	322	324	325																			
R765																								
R766	320	321	322	323	325																			
R767	318	319	320	322	325																			
R768	296	299	300	302	305	307	308	309	310	311	312	313	325											
R769																								
R770	306	313	314	315	318	319	321	322	324															
R771	320	322	324																					
R772	299	301	304	306	307	308	309	310	311	312	315	317	323											
R773	296	297	298	300	302	303	304	308	310	313	316	317	324											
R774	311	314	315	319	322	323	324																	
R775																								
R776																								
R777	303	305	306	311	313	315	318	319	321	322	323													
R778	323																							
R779	300	302	303	304	306	307	311	312	314	315	316	318	325											
R780	278	279	285	286	289	290	294	295	297	299	300	302	303	304	305	307	309	312	314	315	318	321	325	

Copyright © 2005 IEEE. All rights reserved.
This is an unapproved draft, subject to change

Table 55A–4—P matrix: location 73 to 96

	C73	C74	C75	C76	C77	C78	C79	C80	C81	C82	C83	C84	C85	C86	C87	C88	C89	C90	C91	C92	C93	C94	C95	C96
R781	315	316	319	320	321																			
R782																								
R783	280	282	283	284	287	291	292	294	295	296	298	300	303	305	306	311	312	313	314	315	316	317	321	322
R784																								
R785	273	277	279	284	288	294	296	299	300	302	303	304	305	306	311	312	317	318	319	320	321			
R786																								
R787	315	320	321	324	325																			
R788	297	298	299	301	305	306	307	310	311	313	316	318	319	322	323	324	325							
R789																								
R790	285	287	289	294	295	296	297	298	299	300	302	303	309	310	312	313	315	316	317	318	319	320	324	
R791	306	307	308	311	312	315	318	319	321	323	325													
R792	290	291	294	297	300	301	302	307	308	309	313	314	316	318	320	322	323	324	325					
R793	314	315	316	317	318	319	321	324	325															
R794	284	285	286	288	290	292	294	295	298	299	307	309	314	315	316	318	320	321	322					
R795	307	310	312	313	317	319	321	322	323	324	325													
R796	306	309	312	317	319	320	321	324	325															
R797	311	314	315	317	318	322	325																	
R798	306	307	309	310	311	312	314	315	317	320	321	322	323	324	325									
R799	325																							
R800	306	307	309	314	315	316	322	324	325															
R801	320	321	325																					
R802	292	295	296	300	301	303	304	312	313	315	318	320	322	323	325									
R803																								
R804	323	324	325																					
R805	311	313	314	315	318	321	325																	
R806	314	318	319	321	323	324	325																	
R807																								
R808	283	286	287	289	293	294	296	297	298	300	303	305	307	315	320	321	324							
R809	311	312	313	314	315	316	318	319	320	324	325													
R810	301	305	308	309	313	314	317	318	319	321	325													
R811	294	295	296	298	300	301	302	303	306	307	308	309	313	317	318	319	325							
R812	322																							
R813																								
R814	321	323	324																					
R815	268	270	271	272	274	275	276	278	280	281	285	287	288	291	293	296	298	305	306	307	309	310	312	314
R816																								
R817	291	293	297	299	300	302	303	304	307	309	310	311	313	314	316	317	319	320	321	322	324			
R818	300	301	306	308	311	312	313	319	324															
R819	285	287	288	289	290	295	297	302	303	304	305	306	307	308	309	312	315	316	318	319	320	321	323	324
R820																								
R821																								
R822																								
R823																								
R824	325																							
R825	286	288	289	292	293	294	296	298	301	303	305	308	310	315	319	321	324							
R826																								
R827																								
R828																								
R829																								
R830	324																							
R831	319	321	325																					
R832																								
R833	320	322	325																					
R834																								
R835	324																							
R836	298	300	301	303	308	310	311	312	317	319	321	324	325											
R837	304	306	307	313	315	316	320	322	325															
R838	287	289	292	293	297	299	300	301	302	305	306	307	311	323	324									
R839	325																							
R840																								

Copyright © 2005 IEEE. All rights reserved.
This is an unapproved draft, subject to change

Table 55A–4—P matrix: location 73 to 96

	C73	C74	C75	C76	C77	C78	C79	C80	C81	C82	C83	C84	C85	C86	C87	C88	C89	C90	C91	C92	C93	C94	C95	C96
R841	301	302	303	304	305	307	308	309	310	311	312	313	316	317	318	319	322							
R842	307	309	310	312	315	316	319	323	324															
R843	294	295	296	297	299	302	303	305	307	308	309	310	311	312	316	318	319	320	323					
R844	302	305	306	308	309	311	313	315	316	317	319	322	324											
R845																								
R846	325																							
R847	274	275	276	277	278	279	282	283	285	293	297	301	302	303	304	305	308	315	317	318	319	322	324	
R848	297	302	303	306	307	308	309	310	312	314	315	316	318	319	321	323	324							
R849	321	322	325																					
R850																								
R851	308	313	315	324	325																			
R852																								
R853	313	316	317	322	323																			
R854																								
R855	313	314	315	316	322	323	324																	
R856	286	288	289	294	298	299	300	301	304	305	315	319	321	323	324									
R857	313	315	316	317	318	319	321																	
R858																								
R859	279	283	285	286	287	291	292	294	297	302	303	305	309	310	311	312	313	314	315	317	318	319	325	
R860	294	300	301	302	304	306	308	312	315	317	318	319	322											
R861																								
R862	307	311	316	317	318	319	321	322	323															
R863																								
R864	294	295	296	297	298	300	301	303	304	307	308	311	313	315	318	319	321	322	325					
R865	316	317	319																					
R866	312	314	316	317	318	319	320	322	325															
R867																								
R868	277	279	280	285	287	289	293	297	298	300	301	303	304	306	310	311	312	316	317	318	319	322	324	
R869	292	293	295	299	300	302	303	306	311	312	318	322	324											
R870	313	314	315	316	319	320	321	322	323															
R871																								
R872	274	276	278	279	285	286	289	293	294	295	297	298	299	301	303	304	306	307	309	310	311	312	315	316
R873	321	324	325																					
R874																								
R875	311	313	314	316	317	319	321	322	325															
R876	311	312	315	316	319	321	325																	
R877	296	297	301	303	304	305	308	313	317	318	319	320	321	322	324									
R878	325																							
R879																								
R880																								
R881																								
R882																								
R883	291	292	293	294	297	300	301	302	303	307	308	309	310	312	313	315	316	317	320	322	325			
R884																								
R885	313	316	321	322	323	324	325																	
R886																								
R887	309	310	311	312	313	314	319	321	322	323	325													
R888	306	307	308	309	315	323	324																	
R889																								
R890																								
R891	298	299	303	305	306	307	308	309	313	316	317	318	320	321	322	323	324							
R892																								
R893																								
R894																								
R895	320	321	325																					
R896	290	291	293	295	300	302	303	306	307	308	310	311	312	313	314	315	317	319	320	321	324			
R897	289	290	291	292	297	303	304	306	307	309	311	314	315	318	319	320	323							
R898	318	319	321	323	325																			
R899	289	292	296	297	299	300	302	303	307	311	312	314	315	316	318	319	321	322	323	324	325			
R900	317	319	320	322	324																			

Copyright © 2005 IEEE. All rights reserved.
This is an unapproved draft, subject to change

Table 55A–4—P matrix: location 73 to 96

	C73	C74	C75	C76	C77	C78	C79	C80	C81	C82	C83	C84	C85	C86	C87	C88	C89	C90	C91	C92	C93	C94	C95	C96
R901	303	304	306	307	308	311	320	321	322	323	325													
R902	303	304	305	306	307	309	310	312	313	317	318	320	322	323	325									
R903	279	280	281	283	285	286	287	289	293	297	298	302	304	306	307	311	312	315	317	319	321	322	324	
R904																								
R905	301	302	304	305	309	310	311	314	322	323	324													
R906	325																							
R907	297	299	300	301	305	306	307	313	316	317	321	323	324											
R908																								
R909	303	307	311	315	316	317	320	321	323	324	325													
R910	279	280	281	284	286	289	291	292	293	294	295	297	298	299	301	302	304	307	312	314	315	316	317	318
R911	301	302	303	305	307	308	309	310	312	314	315	316	317	321	322	323	325							
R912																								
R913	294	295	298	299	300	301	304	306	313	315	317	318	320											
R914	312	315	316	319	322	324	325																	
R915	322	324	325																					
R916																								
R917																								
R918	301	302	303	305	306	308	309	311	315	316	317	318	319	320	321	322	325							
R919	317	318	321																					
R920	296	298	299	300	301	304	305	306	309	310	314	316	318	321	323	324	325							
R921																								
R922	318	321	323	324	325																			
R923	303	308	310	311	314	317	318	319	320	321	322	324	325											
R924																								
R925																								
R926	324																							
R927																								
R928	325																							
R929																								
R930	298	299	300	302	305	306	307	308	312	313	315	317	318	319	320	321	322	323	324					
R931	320	322	323	324	325																			
R932	319	321	325																					
R933																								
R934	300	302	308	311	313	314	315	316	318	321	323	324	325											
R935																								
R936																								
R937																								
R938	318	319	320	323	325																			
R939	314	315	316	317	325																			
R940	323																							
R941	321	322	323	324	325																			
R942	301	303	305	306	307	309	310	311	315	316	317	320	325											
R943																								
R944	314	317	319	320	322	323	325																	
R945																								
R946	315	317	319	321	323	324	325																	
R947																								
R948	305	306	307	308	309	311	312	318	319	320	321	324	325											
R949	289	290	291	294	296	297	298	299	300	302	303	304	305	309	311	312	313	314	318	319	321	323	325	
R950	299	304	305	306	307	314	318																	
R951	274	276	277	278	280	282	287	288	293	294	295	296	297	298	300	301	304	305	309	310	312	313	314	315
R952	296	297	300	303	309	310	311	312	316	320	324													
R953	309	311	312	314	318	320	321	322	324															
R954																								
R955	311	312	314	317	320	322	325																	
R956	298	301	303	304	306	307	310	311	314	318	319	320	321	323	325									
R957																								
R958	324																							
R959	298	299	300	303	304	306	308	309	310	315	317	322	323											
R960	297	298	299	300	304	307	308	309	312	314	315	317	319	321	322	324	325							

Copyright © 2005 IEEE. All rights reserved.
This is an unapproved draft, subject to change

Table 55A–4—P matrix: location 73 to 96

	C73	C74	C75	C76	C77	C78	C79	C80	C81	C82	C83	C84	C85	C86	C87	C88	C89	C90	C91	C92	C93	C94	C95	C96
R961	320	324	325																					
R962	285	286	289	290	292	297	298	299	300	302	303	305	306	307	310	314	315	316	317	318	320	321	322	
R963																								
R964	308	313	315	317	318	324	325																	
R965	290	293	294	297	298	299	300	301	303	304	305	307	308	310	311	314	316	319	322					
R966	303	305	306	307	308	309	313	315	316	318	322	323	324											
R967																								
R968	304	307	308	310	311	313	316	318	321	323	325													
R969	306	308	309	310	315	316	317	321	323															
R970																								
R971	288	289	290	291	292	294	299	300	301	302	303	305	306	308	311	313	315	316	317	318	319	324	325	
R972	311	314	315	319	320	324	325																	
R973	305	307	309	310	312	313	314	315	317	320	321	322	323	324	325									
R974	302	303	304	305	306	308	309	311	316	317	319	320	322											
R975																								
R976	325																							
R977	308	310	311	312	313	314	319	320	321															
R978	267	268	269	270	272	273	274	276	277	278	280	284	285	286	288	289	290	291	293	299	301	302	303	306
R979																								
R980	305	306	307	309	310	311	313	314	315	320	322	323	325											
R981	296	297	298	299	300	301	302	305	309	310	312	318	320	322	323									
R982	296	298	302	304	305	307	308	310	311	312	313	315	318	320	322	323	325							
R983																								
R984	310	311	312	315	318	320	321																	
R985	299	300	301	302	303	304	308	309	310	313	314	316	317	319	321									
R986	292	295	302	303	304	306	307	309	310	315	316	319	321	323	325									
R987																								
R988	313	315	316	317	320	321	322	323	324															
R989	285	286	288	290	291	292	295	296	297	302	303	307	308	311	312	313	314	317	319	323	324			
R990																								
R991	312	314	316	317	318	322	324																	
R992																								
R993																								
R994																								
R995	292	293	294	295	298	299	300	301	304	305	306	310	314	321	322	323	325							
R996																								
R997																								
R998	297	299	300	303	304	305	306	308	309	310	314	317	318	320	322									
R999	283	285	287	289	290	291	293	297	299	306	308	309	311	312	314	318	319	323	325					
R1000	285	288	292	295	298	300	301	303	306	307	309	310	311	314	317	318	323							
R1001	324																							
R1002	306	307	308	313	315	316	318	323	325															
R1003	306	309	310	312	315	316	317	319	320	323	324													
R1004																								
R1005																								
R1006	283	284	285	287	290	291	295	298	301	302	303	307	310	311	317	319	321	323	325					
R1007																								
R1008	304	307	309	311	315	316	317	318	320	322	324													
R1009																								
R1010	310	311	312	313	314	315	317	319	320	321	323	324	325											
R1011	295	296	297	298	303	305	306	308	310	316	317	320	321	322	324									
R1012																								
R1013	301	302	303	304	306	307	311	313	314	315	316	319	320	324	325									
R1014	279	280	281	282	283	285	286	287	289	290	291	294	295	296	300	301	302	303	306	307	308	309	310	311
R1015																								
R1016	292	296	297	303	306	311	312	315	318	319	321	323	324											
R1017	314	317	318	319	320	322	325																	
R1018	307	308	309	311	312	313	314	315	316	317	319	320	321	322	324									
R1019	322	323	325																					
R1020	310	312	313	317	318	319	321	322	325															

Copyright © 2005 IEEE. All rights reserved.
This is an unapproved draft, subject to change

Table 55A–4—P matrix: location 73 to 96

	C73	C74	C75	C76	C77	C78	C79	C80	C81	C82	C83	C84	C85	C86	C87	C88	C89	C90	C91	C92	C93	C94	C95	C96
R1021	324																							
R1022																								
R1023	293	298	299	300	306	307	309	310	312	313	316	317	319	320	324									
R1024																								
R1025	311	312	314	315	318	319	322	323	324															
R1026																								
R1027	310	311	313	315	320	322	325																	
R1028	323	324	325																					
R1029	314	315	319	320	322	323	325																	
R1030																								
R1031																								
R1032	325																							
R1033	299	301	302	303	305	307	308	309	312	313	314	316	317	318	320	321	325							
R1034																								
R1035	317	319	323	324	325																			
R1036																								
R1037	314	315	318	319	321	324	325																	
R1038	315	317	318	320	321	322	323																	
R1039	325																							
R1040																								
R1041																								
R1042	307	308	309	311	312	313	315	317	320	321	322	324	325											
R1043	312	313	316	317	319	324	325																	
R1044	278	280	281	283	285	286	287	289	290	300	302	306	309	313	314	316	319	320	321	322	323	324	325	
R1045																								
R1046	311	312	313	314	315	318	320	322	323	324	325													
R1047	322	323	324																					
R1048																								
R1049																								
R1050	324																							
R1051	315	317	318	319	322	324	325																	
R1052	318	319	322	323	325																			
R1053																								
R1054																								
R1055	320	322	324																					
R1056	317	319	320	321	324																			
R1057	306	309	310	311	312	313	314	318	319	323	325													
R1058	283	287	288	289	292	293	296	297	298	299	304	305	307	308	309	310	311	312	315	316	319	320	323	324
R1059	307	310	311	313	314	315	316	319	322	323	324													
R1060	308	311	312	313	314	317	319	320	323	324	325													
R1061	309	310	311	312	314	315	316	317	318	320	321													
R1062																								
R1063	304	306	307	310	317	318	321	322	325															
R1064	321	323	325																					
R1065	313	314	315	317	319	320	321	322	323															
R1066	297	299	303	304	310	311	312	313	315	317	319	321	322	324	325									
R1067	314	315	318	319	321	322	323																	
R1068	291	292	295	296	297	300	301	302	303	307	308	310	313	314	315	318	321							
R1069	286	287	288	291	293	294	296	299	300	303	304	305	306	308	309	312	315	316	321	322	325			
R1070																								
R1071	318	323	324																					
R1072	304	305	307	308	309	310	313	314	318	319	325													
R1073	321	323	325																					
R1074	319	321	322																					
R1075																								
R1076	306	307	311	312	313	314	318	319	320	322	323													
R1077	291	292	294	296	298	300	302	306	307	309	317	319	321	322	323	324	325							
R1078	322																							
R1079	294	295	299	300	304	305	306	310	311	313	314	316	317	318	319	323	324							
R1080																								

Copyright © 2005 IEEE. All rights reserved.
This is an unapproved draft, subject to change

Table 55A–4—P matrix: location 73 to 96

	C73	C74	C75	C76	C77	C78	C79	C80	C81	C82	C83	C84	C85	C86	C87	C88	C89	C90	C91	C92	C93	C94	C95	C96
R1081	287	289	291	294	296	298	301	304	306	307	310	313	314	316	318	319	320	322	325					
R1082																								
R1083	308	309	310	311	312	314	315	316	324															
R1084	279	283	286	290	292	297	299	300	302	304	306	307	310	313	319	323	325							
R1085																								
R1086	302	303	305	307	308	311	317	319	322	324	325													
R1087																								
R1088	305	308	313	316	320	321	322	323	324															
R1089	315	317	320	322	323	324	325																	
R1090																								
R1091	309	311	314	317	320	321	322	323	325															
R1092	299	300	301	302	305	306	308	309	311	313	318													
R1093	301	302	304	305	306	309	310	311	312	315	316	317	318	320	323	324	325							
R1094																								
R1095	265	266	269	270	275	277	279	280	282	284	285	288	289	290	292	293	294	295	296	301	302	303	306	309
R1096																								
R1097	309	312	313	314	315	316	318	321	322	324	325													
R1098	274	276	277	278	280	281	282	283	284	286	287	290	292	293	295	296	299	301	302	304	305	307	308	309
R1099																								
R1100	297	298	299	303	304	306	307	309	310	311	313	314	316	319	321	324	325							
R1101	301	302	303	304	306	309	313	314	315	316	318	319	320	322	325									
R1102	295	296	297	298	299	301	303	304	305	310	312	313	314	315	325									
R1103	312	313	317	320	323	324	325																	
R1104																								
R1105	289	290	291	292	293	294	297	299	301	302	303	305	306	308	309	310	311	312	313	314	315	316	318	320
R1106																								
R1107	320	321	323																					
R1108																								
R1109	320	321	323	324	325																			
R1110	273	274	276	278	279	283	284	286	287	288	289	290	291	293	294	295	305	306	307	308	310	312	313	319
R1111																								
R1112	296	300	301	302	304	306	307	308	310	313	315	316	320	324	325									
R1113	319	320	321	322	323	324	325																	
R1114																								
R1115																								
R1116	318	321	325																					
R1117	301	304	305	307	309	311	315	316	319	320	321	322	325											
R1118	301	303	304	305	306	307	308	309	314	323	324													
R1119	313	314	317	318	319	323	324																	
R1120																								
R1121	289	292	294	295	296	297	299	303	307	309	310	313	314	315	320	321	324							
R1122																								
R1123	297	300	301	303	304	305	306	308	310	313	314	316	318	320	321	322	323							
R1124																								
R1125																								
R1126	286	288	289	293	296	297	302	303	306	307	312	315	317	318	320	322	323							
R1127																								
R1128	285	288	289	290	291	292	295	300	301	304	305	307	309	313	317	320	322							
R1129	316	317	324																					
R1130	298	299	300	301	302	303	305	308	311	312	313	314	317	320	321	323	325							
R1131	325																							
R1132																								
R1133																								
R1134	310	311	312	313	314	324	325																	
R1135																								
R1136	325																							
R1137	301	303	306	308	311	312	313	314	315	317	323													
R1138	303	304	305	306	307	308	310	311	313	314	321	324	325											
R1139																								
R1140																								

Copyright © 2005 IEEE. All rights reserved.
This is an unapproved draft, subject to change

Table 55A–4—P matrix: location 73 to 96

	C73	C74	C75	C76	C77	C78	C79	C80	C81	C82	C83	C84	C85	C86	C87	C88	C89	C90	C91	C92	C93	C94	C95	C96
R1141	295	297	298	299	300	301	303	304	307	309	310	312	314	315	316	320	321	323	325					
R1142																								
R1143																								
R1144																								
R1145	316	317	322	323	325																			
R1146	304	306	307	308	309	311	313	314	317	318	319	321	322	323	324									
R1147	307	308	309	310	311	313	314	315	318	319	325													
R1148																								
R1149	312	314	315	316	317	318	320	321	323															
R1150	292	293	294	297	302	304	307	310	311	313	315	316	317	318	319	322	324							
R1151																								
R1152	288	289	291	292	294	295	297	299	300	302	311	314	317	320	323	324	325							
R1153	305	306	309	313	315	316	319	320	322	323	325													
R1154																								
R1155	287	288	293	296	299	300	302	303	304	305	307	310	313	318	319	320	321	322	325					
R1156																								
R1157																								
R1158	289	293	298	299	303	304	308	312	315	316	317	318	319	321	324									
R1159	301	305	306	309	311	312	314	315	316	318	319	320	325											
R1160	281	284	285	286	287	290	291	292	294	295	297	298	302	307	308	314	315	318	319	320	321	322	323	324
R1161																								
R1162	314	315	318	319	320	321	322																	
R1163	279	281	282	284	286	287	288	289	291	293	294	295	298	299	300	303	304	306	307	308	310	315	318	321
R1164	319	320	322	324	325																			
R1165	293	294	296	297	298	299	300	301	302	303	305	306	307	308	310	311	312	317	320	321	322			
R1166	306	307	308	310	315	316	317	319	320	321	324													
R1167	310	312	319	320	321																			
R1168																								
R1169	299	300	306	307	308	309	310	311	314	316	318	320	322											
R1170	318	320	321	323	324																			
R1171	303	307	308	309	310	311	312	313	314	316	320	324	325											
R1172																								
R1173	285	286	287	288	289	290	291	294	295	297	299	300	305	309	312	313	316	323	324					
R1174	311	314	321	322	324																			
R1175	315	316	321	322	325																			
R1176	315	316	319	320	322	323	325																	
R1177	289	291	292	295	302	303	304	305	306	307	317	318	321	324	325									
R1178	278	279	283	290	292	293	294	295	296	297	299	300	310	311	315	317	318	320	322	323	325			
R1179																								
R1180	320	321	324																					
R1181	302	303	309	311	313	314	315	319	320	321	322	323	325											
R1182	300	302	303	304	305	306	307	308	309	310	311	312	313	314	315	318	319	321	323	324	325			
R1183	291	294	295	296	298	299	300	303	304	306	307	310	311	312	317	318	320	323	325					
R1184	298	300	301	302	307	309	310	316	318	319	321	324	325											
R1185	319	320	323																					
R1186																								
R1187	302	303	304	305	308	309	312	314	315	317	319	321	323											
R1188																								
R1189	305	306	307	309	310	311	312	313	318	320	321	323	324											
R1190																								
R1191																								
R1192	277	278	280	284	285	287	288	290	292	293	295	296	297	299	303	305	307	308	310	314	316	319	321	322
R1193	304	305	306	312	313	317	319	320	321	323	324													
R1194	283	287	288	289	291	295	297	302	304	310	312	313	315	318	319	321	323	324	325					
R1195	300	303	304	306	308	309	310	312	313	314	315	316	317	320	323									
R1196																								
R1197																								
R1198																								
R1199	313	315	317	320	321	323	325																	
R1200	289	290	291	292	293	296	297	302	303	306	307	308	309	311	314	316	317	318	320	321	323	324	325	

Copyright © 2005 IEEE. All rights reserved.
This is an unapproved draft, subject to change

Table 55A–4—P matrix: location 73 to 96

	C73	C74	C75	C76	C77	C78	C79	C80	C81	C82	C83	C84	C85	C86	C87	C88	C89	C90	C91	C92	C93	C94	C95	C96
R1201	303	304	305	307	310	311	313	314	315	316	317	318	320	321	323									
R1202																								
R1203	280	282	283	284	289	291	293	294	296	297	298	301	308	309	310	312	314	316	317	319	320	322	323	
R1204	317	320	322	323	324																			
R1205	300	301	302	303	306	309	310	311	316	318	320	321	322	323	324									
R1206	325																							
R1207																								
R1208	299	301	302	303	304	305	306	308	309	313	317	318	323											
R1209	320	321	323																					
R1210	309	312	314	315	319	320	321	322	323															
R1211	292	300	304	305	307	308	309	310	311	313	314	319	320	321	322	323	324							
R1212	295	299	303	307	312	314	315	319	324															
R1213	324																							
R1214	282	284	285	286	288	289	290	295	296	297	300	304	305	306	308	309	310	312	313	318	321	322	324	
R1215																								
R1216	287	288	289	290	293	295	296	297	298	299	300	302	303	306	307	309	311	312	313	320	322	323	324	
R1217																								
R1218	309	313	315	316	319	320	321	323	325															
R1219																								
R1220	298	299	301	302	306	307	311	315	319	321	322	323	325											
R1221	288	289	290	293	295	302	305	307	309	310	313	314	315	318	319	320	321	324	325					
R1222	307	309	311	314	318	319	320	321	323															
R1223	306	309	310	311	312	313	316	317	318	320	325													
R1224																								
R1225	304	305	308	311	314	317	318	319	320	324	325													
R1226																								
R1227	306	309	314	315	318	320	321	323	325															
R1228	323	324	325																					
R1229	325																							
R1230	310	311	312	313	314	315	316	319	320	321	324													
R1231	308	311	313	315	318	320	324																	
R1232																								
R1233																								
R1234	304	307	310	313	316	319	324																	
R1235	316	318	319	323	324																			
R1236																								
R1237	314	315	316	317	318	319	321	322	323	324	325													
R1238	300	305	310	312	314	319	321	322	325															
R1239	313	316	319	321	323																			
R1240																								
R1241	293	294	296	298	300	301	302	305	309	312	315	317	319	321	323									
R1242																								
R1243	325																							
R1244	313	314	320	322	325																			
R1245																								
R1246	321																							
R1247																								
R1248	325																							
R1249	285	286	288	290	292	296	297	298	299	300	301	302	303	305	311	312	313	314	315	316	317	318	320	321
R1250	302	304	305	307	309	313	317	318	319	322	323	324	325											
R1251	314	316	317	318	320																			
R1252	317	321	323	324	325																			
R1253	301	303	304	305	306	307	309	310	311	312	314	315	316	318	319	322	325							
R1254	308	309	310	315	317	319	320	321	323															
R1255	323																							
R1256	314	315	317	319	320	321	322	324	325															
R1257																								
R1258	292	296	297	299	300	304	308	309	310	315	322	324	325											
R1259	283	284	286	287	292	293	294	295	296	298	299	300	301	304	305	306	308	309	310	312	315	316	317	318
R1260	315	317	319	320	323																			

Copyright © 2005 IEEE. All rights reserved.
This is an unapproved draft, subject to change

Table 55A–4—P matrix: location 73 to 96

	C73	C74	C75	C76	C77	C78	C79	C80	C81	C82	C83	C84	C85	C86	C87	C88	C89	C90	C91	C92	C93	C94	C95	C96
R1261	303	306	309	314	315	317	318	321	322	323	325													
R1262	266	267	268	271	273	280	281	282	283	284	285	286	291	292	293	294	295	298	303	306	308	310	311	312
R1263	317	318	319	322	323																			
R1264	299	300	304	305	308	310	314	315	317	319	320	321	322											
R1265	309	310	313	315	316	317	321	322	324															
R1266	317	319	320	321	325																			
R1267	293	295	297	298	303	305	308	309	310	311	312	313	323	324	325									
R1268	293	294	295	296	297	299	300	301	302	303	304	305	308	309	310	313	314	315	321	322	323			
R1269	314	316	320	322	323																			
R1270																								
R1271																								
R1272	309	310	311	312	313	314	315	316	318	320	321	322	323	324	325									
R1273	299	300	303	306	307	308	312	313	315	316	320	324	325											
R1274																								
R1275	309	310	311	312	316	318	320																	
R1276	314	315	317	319	322	324	325																	
R1277	292	293	296	297	301	304	305	306	308	310	315	318	319	323	324									
R1278	321	324	325																					
R1279	294	296	298	300	301	302	303	305	307	309	311	313	314	316	317	318	319	321	323					
R1280	315	318	321	322	325																			
R1281	296	299	303	304	307	308	309	310	311	312	313	315	316	318	321	323	325							
R1282																								
R1283	275	276	277	278	279	281	282	283	284	285	287	292	295	297	298	302	304	305	306	307	309	311	314	315
R1284																								
R1285																								
R1286																								
R1287	299	301	303	307	309	310	311	315	316	318	319	321	323	324	325									
R1288	278	279	280	281	282	283	284	287	288	291	292	293	294	297	299	300	301	304	305	309	310	317	320	324
R1289																								
R1290	281	283	285	289	290	291	293	294	295	298	299	304	305	307	312	316	318	320	325					
R1291	309	310	311	312	313	314	316	319	320	321	324													
R1292																								
R1293	293	294	295	298	299	300	304	310	311	312	316	318	321	324	325									
R1294																								
R1295	321	322	323																					
R1296	325																							
R1297	308	309	312	313	314	316	319	320	322	324	325													
R1298																								
R1299	293	294	295	296	297	301	303	304	305	306	309	311	313	314	318	320	321	322	325					
R1300	301	302	305	307	310	311	312	314	315	316	317	320	323											
R1301																								
R1302	294	299	300	301	303	306	309	311	312	313	319	320	324											
R1303																								
R1304	299	301	305	307	308	309	313	320	321	322	323													
R1305																								
R1306	312	313	314	315	320	322	323	324	325															
R1307																								
R1308	306	307	308	310	311	312	313	314	315	318	321	324	325											
R1309	297	300	304	305	310	313	314	317	318	319	321	322	323											
R1310																								
R1311	301	302	305	306	308	311	313	314	315	316	317	321	323	324	325									
R1312	324																							
R1313	286	287	288	289	290	294	295	298	299	300	301	302	303	304	306	310	314	318	324					
R1314	303	305	308	309	310	312	314	319	322	323	324													
R1315																								
R1316																								
R1317																								
R1318	297	300	301	302	307	308	309	312	316	317	321	323	324											
R1319	302	303	307	309	315	317	318	319	320															
R1320																								

Copyright © 2005 IEEE. All rights reserved.
This is an unapproved draft, subject to change

Table 55A–4—P matrix: location 73 to 96

	C73	C74	C75	C76	C77	C78	C79	C80	C81	C82	C83	C84	C85	C86	C87	C88	C89	C90	C91	C92	C93	C94	C95	C96
R1321	316	318	319	322	324																			
R1322	283	287	290	292	294	297	301	302	303	304	305	312	315	317	320	321	322	324	325					
R1323	307	308	311	314	319	320	321	322	323															
R1324																								
R1325	291	294	296	299	300	301	303	304	306	309	310	313	314	315	316	320	322							
R1326	310	311	314	316	318	323	325																	
R1327																								
R1328	296	297	299	302	305	306	309	310	312	313	315	316	317	318	320	324	325							
R1329																								
R1330																								
R1331	276	281	284	286	287	290	291	292	293	295	296	305	306	307	308	309	312	313	317	319	320	321	323	324
R1332	299	301	302	303	305	307	308	310	312	313	318	320	321	322	323	324	325							
R1333																								
R1334																								
R1335	276	277	278	280	281	282	283	287	289	290	291	292	294	296	299	301	302	306	308	309	311	313	314	315
R1336	282	285	288	289	291	292	293	294	297	298	299	301	303	305	306	308	309	311	313	315	319	320	322	323
R1337	320	322	323																					
R1338	303	305	306	307	309	312	313	317	319	321	325													
R1339	325																							
R1340																								
R1341	306	307	309	311	312	313	314	317	319	320	324													
R1342	313	314	315	316	318	319	321	323	324															
R1343	319																							
R1344	298	299	301	304	305	307	308	309	310	312	315	318	319	323	325									
R1345																								
R1346																								
R1347	313	319	320	324	325																			
R1348	325																							
R1349																								
R1350																								
R1351																								
R1352	313	318	320	322	325																			
R1353																								
R1354																								
R1355	291	294	295	296	298	300	301	303	305	307	316	318	319	322	323									
R1356	278	279	280	282	287	289	291	292	294	295	296	297	299	302	303	305	306	307	308	311	313	316	318	319
R1357	308	313	314	316	317	320	325																	
R1358	283	284	286	287	290	294	298	299	303	308	309	311	314	317	318									
R1359	319	320	325																					
R1360	285	286	287	289	292	293	295	298	299	301	302	306	308	309	314	315	317	319	322	323	325			
R1361	281	282	283	285	286	288	289	290	292	293	296	297	299	300	301	302	303	305	307	310	312	313	317	318
R1362	303	304	305	306	309	310	313	315	316	317	319	321	322											
R1363																								
R1364	302	303	304	305	307	309	310	311	313	316	317	324	325											
R1365	317	318	319	321	322	323	325																	
R1366	296	304	306	307	308	310	313	314	316	318	319	322	323	324	325									
R1367																								
R1368																								
R1369																								
R1370	321	322	323	324	325																			
R1371																								
R1372																								
R1373	305	306	308	310	311	313	314	315	321	322	323	324	325											
R1374																								
R1375	311	312	314	317	318	322	323	324	325															
R1376	299	300	302	303	307	309	311	312	313	314	315	316	318	319	323									
R1377	304	306	307	309	310	313	314	315	316	319	322													
R1378																								
R1379	282	283	284	285	286	288	294	295	297	298	299	300	301	304	307	308	309	312	314	315	318	319	320	321
R1380																								

Copyright © 2005 IEEE. All rights reserved.
This is an unapproved draft, subject to change

Table 55A–4—P matrix: location 73 to 96

	C73	C74	C75	C76	C77	C78	C79	C80	C81	C82	C83	C84	C85	C86	C87	C88	C89	C90	C91	C92	C93	C94	C95	C96
R1381	315	316	319	322	323																			
R1382	304	306	307	311	314	315	316	317	320	321	325													
R1383																								
R1384	292	297	301	302	303	305	308	310	311	313	315	316	317	319	321	322	325							
R1385	286	289	293	297	298	299	305	307	310	311	317	318	322											
R1386																								
R1387	307	308	310	311	314	316	317																	
R1388	321	323	325																					
R1389																								
R1390	304	307	308	309	314	315	316	317	319	320	321	324	325											
R1391	306	309	311	312	316	320	321	322	323	324	325													
R1392																								
R1393	318	320	323																					
R1394	298	299	300	306	307	311	313	314	315	316	317	318	319	320	321	322	325							
R1395																								
R1396	276	278	282	283	284	286	287	288	292	295	296	299	301	303	306	308	309	310	311	313	315	316	318	319
R1397																								
R1398	289	291	292	294	295	296	297	299	302	303	304	305	306	307	308	311	314	316	318	319	322	323	325	
R1399	280	283	285	286	289	290	291	292	293	296	297	299	301	302	304	305	306	307	309	311	314	315	316	317
R1400	303	305	306	309	310	314	316	320	322	323	324													
R1401	315	316	317	320	321	322	323																	
R1402																								
R1403	318	319	320	321	323	324	325																	
R1404	285	288	291	293	295	296	299	302	303	305	307	308	310	311	313	315	321	322	323					
R1405	302	305	307	308	309	311	312	313	314	315	316	318	320	321	324									
R1406	313	316	317	320	321																			
R1407	302	303	304	305	308	315	316	317	318	320	321	322	323	324	325									
R1408	307	308	311	312	314	315	316	318	319	320	323													
R1409	284	285	286	287	291	294	295	296	299	304	310	312	315	317	318	321	323	324	325					
R1410	304	305	306	309	311	312	313	314	317	318	324													
R1411																								
R1412	320	322	325																					
R1413	319	320	324																					
R1414																								
R1415	305	308	309	313	315	318	320	323	325															
R1416	322																							
R1417																								
R1418	325																							
R1419	311	312	314	316	318	319	320	322	325															
R1420																								
R1421	323	324	325																					
R1422	297	298	299	301	302	304	307	310	311	312	313	315	318	320	321									
R1423	304	305	307	308	310	311	312	313	315	316	319	322	324											
R1424	321	322	323	324	325																			
R1425																								
R1426																								
R1427	304	305	306	307	308	311	313	314	315	316	317	322	323											
R1428																								
R1429																								
R1430	285	286	287	290	291	293	297	300	301	304	306	307	309	310	314	315	317	318	319	322	324			
R1431	309	310	311	312	313	314	315	316	317	318	319	320	321	323	324									
R1432	305	306	310	311	312	314	320	321	322	323	324													
R1433																								
R1434	313	314	315	319	322	323	324																	
R1435																								
R1436	303	307	308	311	312	319	322	323	324															
R1437	276	278	281	287	291	295	298	299	300	301	308	311	314	317	318	319	320	321	323	324	325			
R1438	302	305	308	310	316	317	320	321	325															
R1439	280	281	284	286	288	292	294	295	296	297	298	302	304	305	306	307	309	310	312	315	316	322	323	
R1440	301	303	304	306	307	309	310	311	312	313	317	318	321	323	324									

Copyright © 2005 IEEE. All rights reserved.
This is an unapproved draft, subject to change

Table 55A–4—P matrix: location 73 to 96

	C73	C74	C75	C76	C77	C78	C79	C80	C81	C82	C83	C84	C85	C86	C87	C88	C89	C90	C91	C92	C93	C94	C95	C96
R1441	296	299	300	301	302	304	305	306	307	308	310	311	312	314	317	319	320	321	325					
R1442	307	309	313	315	320	322	323																	
R1443	317	318	319	323	324																			
R1444	321	323	325																					
R1445	320	323	324																					
R1446	297	299	302	305	310	311	312	313	314	317	318	319	320	322	325									
R1447	321	322	323																					
R1448	301	307	309	313	315	318	319	320	321	323	325													
R1449	319	321	322	323	324																			
R1450	309	313	315	317	318	321	322	323	325															
R1451	288	294	297	298	304	305	308	310	315	317	321													
R1452																								
R1453	313	318	320	322	323	324	325																	
R1454	325																							
R1455																								
R1456	310	313	315	316	317	319	321																	
R1457	289	290	293	294	295	299	301	303	304	305	307	309	310	315	317	319	320	322	323	324	325			
R1458	325																							
R1459																								
R1460	325																							
R1461	321	322	325																					
R1462	318	320	321	323	325																			
R1463	311	314	315	318	320	321	322	323	325															
R1464	311	314	317	318	319	320	323																	
R1465	273	274	275	276	277	279	284	287	289	291	292	294	295	296	298	299	300	301	302	305	306	307	308	312
R1466	316	317	319	321	322	323	324																	
R1467																								
R1468	283	284	285	286	289	290	296	297	298	302	304	305	306	311	312	313	317	318	321	324	325			
R1469	290	291	293	294	296	297	298	299	300	302	303	305	306	308	309	312	313	316	318	319	322	323	324	
R1470																								
R1471	318	320	321	323	324																			
R1472																								
R1473																								
R1474	296	298	299	300	302	303	304	305	306	307	308	309	312	313	316	317	318	320	322					
R1475	300	303	305	307	308	309	311	312	313	316	319	320	325											
R1476	325																							
R1477																								
R1478																								
R1479																								
R1480	324																							
R1481	307	310	311	314	315	316	317	321	324															
R1482	311	313	318	319	322	323	324																	
R1483																								
R1484	307	309	312	315	318	319	320	322	324															
R1485	323																							
R1486																								
R1487																								
R1488	300	302	303	305	306	308	310	315	316	317	318	322	323	324	325									
R1489	305	306	309	312	317	318	319	321	322	323	325													
R1490	292	293	296	300	303	305	306	308	313	314	315	316	321	324	325									
R1491																								
R1492																								
R1493	324																							
R1494	305	306	316	319	320	323	324																	
R1495	324																							
R1496	301	302	304	306	307	308	309	311	314	317	319	321	325											
R1497	302	303	304	305	310	311	313	314	315	316	317	319	320	321	322	323	325							
R1498	295	296	297	298	299	300	301	305	306	307	309	311	312	313	314	316	317	323	325					
R1499	274	275	276	278	281	283	287	288	289	290	293	295	296	298	299	301	302	306	308	311	312	313	315	316
R1500	293	296	298	300	301	302	308	309	310	311	314	315	316	317	318	321	325							

Copyright © 2005 IEEE. All rights reserved.
This is an unapproved draft, subject to change

Table 55A–4—P matrix: location 73 to 96

	C73	C74	C75	C76	C77	C78	C79	C80	C81	C82	C83	C84	C85	C86	C87	C88	C89	C90	C91	C92	C93	C94	C95	C96
R1501	287	293	297	300	301	302	303	307	310	311	312	313	314	315	316	317	322	324	325					
R1502	325																							
R1503																								
R1504																								
R1505	309	310	311	312	313	314	315	316	318	321	324													
R1506	274	275	276	277	278	279	281	284	286	287	288	290	293	294	295	296	297	299	301	303	304	307	309	310
R1507	307	308	310	312	314	316	317	319	320	321	322	324	325											
R1508	306	307	309	311	313	314	319	320	322															
R1509																								
R1510	287	289	291	300	302	303	305	307	308	309	313	314	319	320	322	324	325							
R1511																								
R1512	296	297	298	300	303	306	313	315	316	317	318	319	322	324	325									
R1513	303	304	307	308	313	315	316	320	323															
R1514	324																							
R1515	306	311	313	315	317	318	322	324	325															
R1516	292	293	294	297	299	303	306	309	311	312	313	314	316	319	322									
R1517																								
R1518	319	320	321	323	325																			
R1519	280	281	282	284	285	288	291	292	295	299	301	306	307	309	310	311	313	315	316	317	321	324	325	
R1520	291	295	297	298	300	301	302	304	306	307	311	313	318	319	322									
R1521	325																							
R1522	309	310	311	314	315	316	320	321	323															
R1523	313	314	315	316	317	319	320	321	324															
R1524																								
R1525	287	290	291	293	294	296	298	299	302	306	308	309	310	313	314	315	318	319	321	322	324			
R1526	313	314	317	320	321	322	325																	
R1527																								
R1528	311	312	315	317	319	320	322																	
R1529	289	292	296	297	298	299	300	302	303	304	305	307	308	310	312	315	319	323	324					
R1530	297	298	305	307	308	313	314	315	317	318	319	320	322	324	325									
R1531	323																							
R1532	302	303	305	310	312	316	318	319	322															
R1533	294	295	298	299	300	301	304	306	310	312	313	317	318	320	321									
R1534	289	290	292	293	294	295	296	297	299	302	305	306	308	313	318									
R1535	302	305	306	307	310	311	312	314	319	321	322	323	324											
R1536																								
R1537	294	295	300	302	304	307	308	310	311	314	317	319	321	323	324									
R1538																								
R1539																								
R1540																								
R1541	305	306	307	308	309	311	312	313	315	316	317	318	319	320	321	322	323							
R1542	304	314	315	318	319	324	325																	
R1543	311	316	318	322	324																			
R1544	320	321	322	323	324																			
R1545	296	297	298	301	302	304	306	308	314	315	316	317	318	319	320	323	324							
R1546																								
R1547	295	297	299	300	301	302	304	305	306	307	308	310	314	315	316	317	319	320	321	322	323			
R1548	325																							
R1549																								
R1550	307	309	310	313	314	316	320																	
R1551	307	312	314	316	318	321	325																	
R1552																								
R1553																								
R1554																								
R1555																								
R1556	307	308	310	311	313	314	316	317	319	323	325													
R1557	285	286	289	290	294	295	296	298	299	302	306	309	312	313	316	318	319	320	321	322	324			
R1558																								
R1559	311	316	320	321	325																			
R1560	304	308	309	310	315	316	317	318	320	321	324													

Copyright © 2005 IEEE. All rights reserved.
This is an unapproved draft, subject to change

Table 55A–4—P matrix: location 73 to 96

	C73	C74	C75	C76	C77	C78	C79	C80	C81	C82	C83	C84	C85	C86	C87	C88	C89	C90	C91	C92	C93	C94	C95	C96
R1561																								
R1562																								
R1563	314	315	321	323	325																			
R1564	323	324	325																					
R1565	313	314	315	318	319	320	321	322	323															
R1566	306	307	308	309	316	320	322	323	325															
R1567																								
R1568																								
R1569																								
R1570																								
R1571	300	303	305	307	308	309	310	311	314	315	318	319	320	323	325									
R1572																								
R1573	320	321	322																					
R1574	303	304	305	306	308	311	312	313	314	318	320													
R1575																								
R1576	317	319	320	321	322	323	325																	
R1577	309	314	316	317	318	319	320	324	325															
R1578	325																							
R1579	305	306	307	309	311	312	317	321	323															
R1580	301	302	306	308	310	316	319	320	321	323	324													
R1581	302	304	305	308	314	315	316	317	318	319	321	323	325											
R1582	304	305	306	307	310	311	314	315	318	324	325													
R1583																								
R1584																								
R1585																								
R1586	325																							
R1587	286	288	291	293	294	295	298	299	302	303	305	308	310	311	313	314	315	316	317	319	320	321	322	323
R1588	325																							
R1589																								
R1590																								
R1591	290	291	298	299	301	302	306	309	311	320	322													
R1592																								
R1593	288	291	292	298	300	301	302	309	312	313	315	318	319	321	322	324	325							
R1594	287	290	291	294	295	296	297	298	301	302	303	305	311	312	313	314	317	321	323	324	325			
R1595	319	320	321																					
R1596	308	309	313	314	315	316	318	319	320	322	323	324	325											
R1597	305	306	307	308	312	314	315	317	321	324	325													
R1598	288	289	292	295	296	297	301	302	303	305	309	315	316	319	321	323	324							
R1599																								
R1600	295	296	297	300	301	302	304	307	308	309	314	317	318	319	324									
R1601																								
R1602	304	307	308	309	310	312	316	318	319	320	321	322	324											
R1603	325																							
R1604																								
R1605	306	308	310	311	313	314	316	320	322	324	325													
R1606	289	290	291	293	294	296	297	298	302	303	306	308	310	311	312	314	322	323	324					
R1607	313	314	315	317	323	324	325																	
R1608																								
R1609	300	303	304	308	310	315	317	318	319	322	323													
R1610																								
R1611	294	295	297	298	300	303	305	306	311	313	314	319	320	321	322									
R1612	267	268	270	271	279	282	283	284	285	289	290	291	295	296	297	298	299	300	301	304	305	307	311	315
R1613	319	321	323	324	325																			
R1614																								
R1615	310	311	313	314	317	318	322																	
R1616																								
R1617																								
R1618	284	285	289	290	291	292	294	295	296	299	300	301	305	306	308	310	311	313	320	323	325			
R1619	299	305	306	307	308	311	314	315	316	317	320	323	325											
R1620																								

Copyright © 2005 IEEE. All rights reserved.
This is an unapproved draft, subject to change

Table 55A–4—P matrix: location 73 to 96

	C73	C74	C75	C76	C77	C78	C79	C80	C81	C82	C83	C84	C85	C86	C87	C88	C89	C90	C91	C92	C93	C94	C95	C96
R1621	321	322	324																					
R1622	287	288	290	291	292	293	294	299	300	301	302	303	307	308	309	311	313	314	315	316	317			
R1623	315	316	321	322	325																			
R1624	312	313	314	316	317	320	321																	
R1625	323																							
R1626	299	301	303	304	305	307	309	310	312	314	318	320	325											
R1627	312	315	321	324	325																			
R1628	309	310	311	314	316	318	319	320	322															
R1629	304	305	306	310	313	315	319	321	323	324	325													
R1630	318	320	322	323	324																			
R1631	297	302	306	307	309	311	312	313	318	319	320	321	322	324	325									
R1632	296	297	299	300	303	304	306	308	309	311	312	313	314	316	317	319	321	323	324					
R1633	297	299	301	304	307	308	309	310	317	319	322	324	325											
R1634	310	313	315	318	321	324	325																	
R1635																								
R1636																								
R1637	304	306	310	311	316	317	323																	
R1638	324																							
R1639																								
R1640	283	285	289	294	296	302	306	307	313	316	317	319	320	321	325									
R1641	280	281	284	285	287	288	289	293	297	299	300	301	302	305	306	308	310	313	315	316	317	319	320	321
R1642																								
R1643	297	299	300	301	303	304	305	307	309	315	316	320	322	323	325									
R1644	312	315	319	320	322	323	324																	
R1645																								
R1646																								
R1647																								
R1648	297	298	299	300	303	305	306	307	308	312	315	316	317	318	320	321	323							
R1649	325																							
R1650	294	295	296	298	302	303	304	306	307	308	309	310	311	316	317	321	324							
R1651	301	305	308	309	310	312	313	316	318	320	322	323	324											
R1652	299	301	302	303	305	306	308	311	314	317	318	319	320	322	325									
R1653	286	287	289	290	291	292	293	294	296	298	303	306	307	309	312	313	317	318	320					
R1654	284	285	289	292	293	294	296	297	304	307	310	314	317	320	321									
R1655	309	310	313	315	317	320	323	324	325															
R1656																								
R1657	290	291	292	293	295	296	299	300	304	305	307	310	311	312	314	316	319	323	325					
R1658	303	304	307	308	309	310	312	313	314	315	318	320	321	322	325									
R1659	316	317	318	320	321	322	324																	
R1660	325																							
R1661	293	295	296	297	298	300	301	306	308	310	311	312	314	317	318	320	323							
R1662	309	315	316	318	319	322	325																	
R1663																								
R1664	277	278	281	282	284	285	286	287	290	292	293	294	295	296	298	301	306	309	312	314	316	320	321	322
R1665																								
R1666																								
R1667	273	277	280	281	284	285	286	289	290	292	293	294	296	297	298	300	306	308	311	312	313	316	317	319
R1668																								
R1669	300	303	304	306	307	309	312	313	314	316	320	323	324											
R1670	308	309	310	313	314	315	316	322	323															
R1671																								
R1672	291	292	295	297	298	301	302	303	307	309	311	312	314	315	317	318	319	320	321	322	323			
R1673	306	307	308	309	310	312	314	316	317	321	325													
R1674																								
R1675	278	280	281	282	283	287	289	290	291	293	298	301	303	304	305	309	316	317	318	324	325			
R1676																								
R1677																								
R1678																								
R1679																								
R1680																								

Copyright © 2005 IEEE. All rights reserved.
This is an unapproved draft, subject to change

Table 55A–4—P matrix: location 73 to 96

	C73	C74	C75	C76	C77	C78	C79	C80	C81	C82	C83	C84	C85	C86	C87	C88	C89	C90	C91	C92	C93	C94	C95	C96
R1681	310	313	321	322	324																			
R1682	315	317	318	319	320	323	325																	
R1683																								
R1684	321	324	325																					
R1685	299	302	304	306	310	311	313	314	316	318	320	321	322											
R1686	323																							
R1687																								
R1688	283	287	289	292	293	299	300	301	302	303	305	308	310	311	314	316	317	322	325					
R1689	319	322	323	324	325																			
R1690	288	289	291	293	296	299	301	302	303	304	305	312	315	317	319	320	321	322	325					
R1691	323	324	325																					
R1692																								
R1693	313	314	315	316	317	321	322																	
R1694	313	314	318	320	325																			
R1695	273	275	277	279	280	281	282	284	286	289	291	292	293	295	300	306	310	312	313	315	316	317	318	320
R1696																								
R1697																								
R1698																								
R1699	280	281	283	286	287	288	290	291	292	294	297	300	301	302	307	308	309	310	313	314	316	317	319	323
R1700	284	287	288	289	290	291	294	297	299	303	306	307	308	309	311	313	314	316	318	319	321	324	325	
R1701	306	309	310	316	318	319	321	323	325															
R1702	307	310	311	314	318	320	321																	
R1703																								
R1704																								
R1705	300	301	306	307	310	311	313	314	315	320	321	324	325											
R1706	302	305	306	307	310	315	319	320	321	323	324													
R1707	301	302	303	304	306	307	308	309	311	312	313	314	315	317	318	321	322	323	325					
R1708	305	306	309	311	312	313	315	316	317	322	323	324	325											
R1709	308	312	313	314	315	319	322	323	325															
R1710	325																							
R1711	305	307	316	317	321	322	323	324	325															
R1712																								
R1713																								
R1714																								
R1715	279	280	281	284	286	287	288	291	292	293	297	298	299	301	303	304	306	307	308	310	311	312	313	315
R1716	306	307	308	309	310	311	314	316	319	322	323	324	325											
R1717	321	322	323	324	325																			
R1718																								
R1719	304	306	308	309	311	312	317	321	322	323	325													
R1720	295	296	300	303	304	305	306	310	311	312	313	318	319	321	322	323	325							
R1721	320	322	325																					
R1722	323	324	325																					
R1723	317	318	319	320	321	322	323																	

Copyright © 2005 IEEE. All rights reserved.
This is an unapproved draft, subject to change

Table 55A–5—P matrix: location 97 to 113

	C97	C98	C99	C100	C101	C102	C103	C104	C105	C106	C107	C108	C109	C110	C111	C112	C113
R1																	
R2																	
R3																	
R4																	
R5																	
R6																	
R7																	
R8																	
R9																	
R10																	
R11																	
R12																	
R13																	
R14																	
R15																	
R16																	
R17																	
R18																	
R19																	
R20																	
R21																	
R22																	
R23																	
R24																	
R25																	
R26																	
R27																	
R28																	
R29																	
R30																	
R31																	
R32																	
R33																	
R34																	
R35																	
R36																	
R37																	
R38																	
R39																	
R40																	
R41																	
R42																	
R43																	
R44																	
R45																	
R46																	
R47																	
R48																	
R49																	
R50																	
R51																	
R52																	
R53																	
R54																	
R55																	
R56																	
R57																	
R58																	
R59																	
R60																	

Copyright © 2005 IEEE. All rights reserved.
This is an unapproved draft, subject to change

Table 55A–5—P matrix: location 97 to 113

	C97	C98	C99	C100	C101	C102	C103	C104	C105	C106	C107	C108	C109	C110	C111	C112	C113
R61																	
R62																	
R63																	
R64																	
R65																	
R66																	
R67																	
R68																	
R69																	
R70																	
R71																	
R72																	
R73																	
R74																	
R75																	
R76																	
R77																	
R78																	
R79																	
R80																	
R81																	
R82																	
R83																	
R84	309	310	312	313	316	319	320	324	325								
R85																	
R86																	
R87																	
R88																	
R89																	
R90																	
R91																	
R92																	
R93																	
R94																	
R95																	
R96																	
R97																	
R98																	
R99																	
R100																	
R101																	
R102																	
R103																	
R104																	
R105																	
R106																	
R107																	
R108																	
R109																	
R110																	
R111																	
R112																	
R113																	
R114																	
R115																	
R116																	
R117	292	295	297	298	299	300	301	302	306	308	312	313	316	317	319	322	325
R118																	
R119																	
R120																	

Copyright © 2005 IEEE. All rights reserved.
This is an unapproved draft, subject to change

Table 55A–5—P matrix: location 97 to 113

	C97	C98	C99	C100	C101	C102	C103	C104	C105	C106	C107	C108	C109	C110	C111	C112	C113
R121																	
R122																	
R123																	
R124																	
R125																	
R126																	
R127																	
R128																	
R129																	
R130																	
R131																	
R132																	
R133																	
R134																	
R135																	
R136																	
R137																	
R138																	
R139																	
R140																	
R141																	
R142																	
R143																	
R144																	
R145																	
R146																	
R147																	
R148																	
R149																	
R150																	
R151																	
R152																	
R153																	
R154																	
R155																	
R156																	
R157																	
R158																	
R159																	
R160																	
R161																	
R162																	
R163																	
R164																	
R165																	
R166																	
R167																	
R168																	
R169																	
R170																	
R171																	
R172																	
R173																	
R174																	
R175																	
R176																	
R177																	
R178																	
R179																	
R180																	

Copyright © 2005 IEEE. All rights reserved.
This is an unapproved draft, subject to change

Table 55A–5—P matrix: location 97 to 113

	C97	C98	C99	C100	C101	C102	C103	C104	C105	C106	C107	C108	C109	C110	C111	C112	C113
R181																	
R182																	
R183																	
R184																	
R185																	
R186																	
R187																	
R188																	
R189																	
R190	319	320	324														
R191																	
R192	322	324	325														
R193																	
R194																	
R195	315	316	321	322	325												
R196																	
R197																	
R198																	
R199																	
R200																	
R201																	
R202																	
R203																	
R204																	
R205																	
R206																	
R207																	
R208																	
R209																	
R210																	
R211																	
R212																	
R213																	
R214																	
R215																	
R216																	
R217																	
R218																	
R219																	
R220																	
R221																	
R222																	
R223																	
R224																	
R225																	
R226	316	319	321	322	324												
R227																	
R228																	
R229																	
R230																	
R231																	
R232																	
R233																	
R234																	
R235	322	323	324														
R236																	
R237	323																
R238																	
R239																	
R240																	

Copyright © 2005 IEEE. All rights reserved.
This is an unapproved draft, subject to change

Table 55A–5—P matrix: location 97 to 113

	C97	C98	C99	C100	C101	C102	C103	C104	C105	C106	C107	C108	C109	C110	C111	C112	C113
R241																	
R242																	
R243																	
R244																	
R245																	
R246																	
R247																	
R248																	
R249																	
R250																	
R251																	
R252																	
R253																	
R254																	
R255																	
R256																	
R257																	
R258																	
R259																	
R260																	
R261																	
R262	307	309	312	313	314	315	316	317	320	321	322	323	325				
R263																	
R264																	
R265																	
R266																	
R267																	
R268	316	318	319	320	321	324	325										
R269																	
R270																	
R271																	
R272																	
R273																	
R274																	
R275																	
R276																	
R277																	
R278																	
R279																	
R280																	
R281																	
R282																	
R283																	
R284																	
R285	325																
R286																	
R287																	
R288																	
R289																	
R290																	
R291																	
R292																	
R293																	
R294																	
R295																	
R296	320	322	325														
R297																	
R298																	
R299																	
R300																	

Copyright © 2005 IEEE. All rights reserved.
This is an unapproved draft, subject to change

Table 55A–5—P matrix: location 97 to 113

	C97	C98	C99	C100	C101	C102	C103	C104	C105	C106	C107	C108	C109	C110	C111	C112	C113
R301																	
R302																	
R303																	
R304																	
R305																	
R306																	
R307	325																
R308																	
R309																	
R310																	
R311																	
R312																	
R313																	
R314																	
R315																	
R316																	
R317																	
R318																	
R319																	
R320																	
R321																	
R322																	
R323																	
R324																	
R325																	
R326																	
R327	323	324	325														
R328																	
R329																	
R330																	
R331																	
R332																	
R333																	
R334																	
R335																	
R336																	
R337																	
R338																	
R339																	
R340																	
R341																	
R342																	
R343																	
R344																	
R345																	
R346																	
R347																	
R348																	
R349	317	319	321	322	324												
R350	322	323	325														
R351																	
R352																	
R353																	
R354																	
R355																	
R356																	
R357	323																
R358																	
R359																	
R360																	

Copyright © 2005 IEEE. All rights reserved.
This is an unapproved draft, subject to change

Table 55A–5—P matrix: location 97 to 113

	C97	C98	C99	C100	C101	C102	C103	C104	C105	C106	C107	C108	C109	C110	C111	C112	C113
R361																	
R362																	
R363																	
R364																	
R365																	
R366																	
R367																	
R368																	
R369																	
R370																	
R371																	
R372																	
R373																	
R374																	
R375																	
R376																	
R377																	
R378																	
R379																	
R380																	
R381																	
R382																	
R383																	
R384																	
R385																	
R386																	
R387																	
R388																	
R389																	
R390																	
R391																	
R392																	
R393																	
R394																	
R395																	
R396																	
R397	321	322	325														
R398																	
R399																	
R400																	
R401																	
R402																	
R403																	
R404																	
R405																	
R406																	
R407																	
R408																	
R409																	
R410																	
R411																	
R412																	
R413																	
R414																	
R415																	
R416																	
R417																	
R418																	
R419																	
R420																	

Copyright © 2005 IEEE. All rights reserved.
This is an unapproved draft, subject to change

Table 55A–5—P matrix: location 97 to 113

	C97	C98	C99	C100	C101	C102	C103	C104	C105	C106	C107	C108	C109	C110	C111	C112	C113
R421																	
R422																	
R423																	
R424																	
R425																	
R426																	
R427																	
R428																	
R429																	
R430																	
R431																	
R432																	
R433																	
R434	317	323	324														
R435																	
R436																	
R437																	
R438																	
R439																	
R440																	
R441																	
R442																	
R443																	
R444																	
R445																	
R446																	
R447	324																
R448																	
R449																	
R450																	
R451																	
R452																	
R453																	
R454																	
R455	322	324	325														
R456																	
R457																	
R458																	
R459																	
R460																	
R461																	
R462																	
R463																	
R464																	
R465																	
R466																	
R467																	
R468																	
R469																	
R470																	
R471																	
R472																	
R473																	
R474																	
R475																	
R476																	
R477																	
R478																	
R479																	
R480																	

Copyright © 2005 IEEE. All rights reserved.
This is an unapproved draft, subject to change

Table 55A–5—P matrix: location 97 to 113

	C97	C98	C99	C100	C101	C102	C103	C104	C105	C106	C107	C108	C109	C110	C111	C112	C113
R481																	
R482																	
R483																	
R484																	
R485																	
R486																	
R487																	
R488																	
R489																	
R490																	
R491																	
R492																	
R493																	
R494																	
R495																	
R496																	
R497																	
R498																	
R499																	
R500	311	314	315	319	320	322	323	324	325								
R501																	
R502																	
R503																	
R504																	
R505																	
R506																	
R507																	
R508																	
R509																	
R510																	
R511																	
R512																	
R513																	
R514																	
R515																	
R516																	
R517																	
R518																	
R519																	
R520																	
R521																	
R522																	
R523																	
R524																	
R525																	
R526																	
R527																	
R528																	
R529																	
R530																	
R531																	
R532																	
R533																	
R534																	
R535																	
R536																	
R537																	
R538																	
R539																	
R540																	

Copyright © 2005 IEEE. All rights reserved.
This is an unapproved draft, subject to change

Table 55A–5—P matrix: location 97 to 113

	C97	C98	C99	C100	C101	C102	C103	C104	C105	C106	C107	C108	C109	C110	C111	C112	C113
R541																	
R542																	
R543																	
R544																	
R545																	
R546																	
R547																	
R548																	
R549																	
R550																	
R551																	
R552																	
R553																	
R554																	
R555																	
R556																	
R557																	
R558																	
R559																	
R560																	
R561																	
R562																	
R563																	
R564																	
R565																	
R566																	
R567																	
R568																	
R569																	
R570																	
R571																	
R572																	
R573																	
R574																	
R575																	
R576	319	321	322	323	324												
R577																	
R578																	
R579																	
R580																	
R581																	
R582																	
R583																	
R584																	
R585																	
R586																	
R587																	
R588																	
R589																	
R590																	
R591																	
R592																	
R593	317	321	322	323	325												
R594																	
R595																	
R596																	
R597																	
R598																	
R599																	
R600																	

Copyright © 2005 IEEE. All rights reserved.
This is an unapproved draft, subject to change

Table 55A–5—P matrix: location 97 to 113

	C97	C98	C99	C100	C101	C102	C103	C104	C105	C106	C107	C108	C109	C110	C111	C112	C113
R601																	
R602																	
R603																	
R604																	
R605																	
R606																	
R607																	
R608																	
R609																	
R610																	
R611																	
R612																	
R613																	
R614																	
R615																	
R616	324																
R617																	
R618																	
R619																	
R620																	
R621																	
R622																	
R623																	
R624																	
R625																	
R626																	
R627																	
R628																	
R629																	
R630																	
R631																	
R632																	
R633																	
R634																	
R635																	
R636																	
R637	313	314	315	316	318	319	320	321	322	324	325						
R638																	
R639																	
R640																	
R641	307	308	310	311	312	313	315	318	320	321	322	323	324				
R642																	
R643																	
R644																	
R645																	
R646																	
R647	325																
R648																	
R649																	
R650																	
R651																	
R652																	
R653																	
R654																	
R655																	
R656																	
R657																	
R658																	
R659																	
R660																	

Copyright © 2005 IEEE. All rights reserved.
This is an unapproved draft, subject to change

Table 55A–5—P matrix: location 97 to 113

	C97	C98	C99	C100	C101	C102	C103	C104	C105	C106	C107	C108	C109	C110	C111	C112	C113
R661	311	313	315	317	318	320	321	322	323								
R662																	
R663																	
R664																	
R665																	
R666																	
R667																	
R668																	
R669																	
R670																	
R671																	
R672	325																
R673																	
R674																	
R675																	
R676																	
R677																	
R678																	
R679																	
R680																	
R681																	
R682	324																
R683																	
R684																	
R685																	
R686																	
R687																	
R688																	
R689																	
R690																	
R691																	
R692																	
R693																	
R694																	
R695																	
R696																	
R697																	
R698																	
R699																	
R700																	
R701																	
R702																	
R703																	
R704																	
R705																	
R706																	
R707																	
R708																	
R709																	
R710																	
R711																	
R712	324																
R713																	
R714																	
R715																	
R716	321	322	324														
R717																	
R718																	
R719																	
R720																	

Copyright © 2005 IEEE. All rights reserved.
This is an unapproved draft, subject to change

Table 55A–5—P matrix: location 97 to 113

	C97	C98	C99	C100	C101	C102	C103	C104	C105	C106	C107	C108	C109	C110	C111	C112	C113
R721																	
R722																	
R723																	
R724																	
R725																	
R726																	
R727																	
R728																	
R729																	
R730																	
R731																	
R732																	
R733																	
R734																	
R735																	
R736																	
R737																	
R738																	
R739																	
R740																	
R741																	
R742																	
R743																	
R744																	
R745																	
R746																	
R747																	
R748																	
R749																	
R750																	
R751																	
R752																	
R753																	
R754																	
R755																	
R756																	
R757																	
R758																	
R759																	
R760																	
R761																	
R762																	
R763																	
R764																	
R765																	
R766																	
R767																	
R768																	
R769																	
R770																	
R771																	
R772																	
R773																	
R774																	
R775																	
R776																	
R777																	
R778																	
R779																	
R780																	

Copyright © 2005 IEEE. All rights reserved.
This is an unapproved draft, subject to change

Table 55A–5—P matrix: location 97 to 113

	C97	C98	C99	C100	C101	C102	C103	C104	C105	C106	C107	C108	C109	C110	C111	C112	C113
R781																	
R782																	
R783	323																
R784																	
R785																	
R786																	
R787																	
R788																	
R789																	
R790																	
R791																	
R792																	
R793																	
R794																	
R795																	
R796																	
R797																	
R798																	
R799																	
R800																	
R801																	
R802																	
R803																	
R804																	
R805																	
R806																	
R807																	
R808																	
R809																	
R810																	
R811																	
R812																	
R813																	
R814																	
R815	318	320	322														
R816																	
R817																	
R818																	
R819	325																
R820																	
R821																	
R822																	
R823																	
R824																	
R825																	
R826																	
R827																	
R828																	
R829																	
R830																	
R831																	
R832																	
R833																	
R834																	
R835																	
R836																	
R837																	
R838																	
R839																	
R840																	

Copyright © 2005 IEEE. All rights reserved.
This is an unapproved draft, subject to change

Table 55A–5—P matrix: location 97 to 113

	C97	C98	C99	C100	C101	C102	C103	C104	C105	C106	C107	C108	C109	C110	C111	C112	C113
R841																	
R842																	
R843																	
R844																	
R845																	
R846																	
R847																	
R848																	
R849																	
R850																	
R851																	
R852																	
R853																	
R854																	
R855																	
R856																	
R857																	
R858																	
R859																	
R860																	
R861																	
R862																	
R863																	
R864																	
R865																	
R866																	
R867																	
R868																	
R869																	
R870																	
R871																	
R872	317	318	319	321	325												
R873																	
R874																	
R875																	
R876																	
R877																	
R878																	
R879																	
R880																	
R881																	
R882																	
R883																	
R884																	
R885																	
R886																	
R887																	
R888																	
R889																	
R890																	
R891																	
R892																	
R893																	
R894																	
R895																	
R896																	
R897																	
R898																	
R899																	
R900																	

Copyright © 2005 IEEE. All rights reserved.
This is an unapproved draft, subject to change

Table 55A–5—P matrix: location 97 to 113

	C97	C98	C99	C100	C101	C102	C103	C104	C105	C106	C107	C108	C109	C110	C111	C112	C113
R901																	
R902																	
R903																	
R904																	
R905																	
R906																	
R907																	
R908																	
R909																	
R910	319	323	324														
R911																	
R912																	
R913																	
R914																	
R915																	
R916																	
R917																	
R918																	
R919																	
R920																	
R921																	
R922																	
R923																	
R924																	
R925																	
R926																	
R927																	
R928																	
R929																	
R930																	
R931																	
R932																	
R933																	
R934																	
R935																	
R936																	
R937																	
R938																	
R939																	
R940																	
R941																	
R942																	
R943																	
R944																	
R945																	
R946																	
R947																	
R948																	
R949																	
R950																	
R951	320	323	325														
R952																	
R953																	
R954																	
R955																	
R956																	
R957																	
R958																	
R959																	
R960																	

Copyright © 2005 IEEE. All rights reserved.
This is an unapproved draft, subject to change

Table 55A–5—P matrix: location 97 to 113

	C97	C98	C99	C100	C101	C102	C103	C104	C105	C106	C107	C108	C109	C110	C111	C112	C113
R961																	
R962																	
R963																	
R964																	
R965																	
R966																	
R967																	
R968																	
R969																	
R970																	
R971																	
R972																	
R973																	
R974																	
R975																	
R976																	
R977																	
R978	308	309	310	313	315	316	318	319	325								
R979																	
R980																	
R981																	
R982																	
R983																	
R984																	
R985																	
R986																	
R987																	
R988																	
R989																	
R990																	
R991																	
R992																	
R993																	
R994																	
R995																	
R996																	
R997																	
R998																	
R999																	
R1000																	
R1001																	
R1002																	
R1003																	
R1004																	
R1005																	
R1006																	
R1007																	
R1008																	
R1009																	
R1010																	
R1011																	
R1012																	
R1013																	
R1014	313	314	319	320	321	322	323										
R1015																	
R1016																	
R1017																	
R1018																	
R1019																	
R1020																	

Copyright © 2005 IEEE. All rights reserved.
This is an unapproved draft, subject to change

Table 55A–5—P matrix: location 97 to 113

	C97	C98	C99	C100	C101	C102	C103	C104	C105	C106	C107	C108	C109	C110	C111	C112	C113
R1021																	
R1022																	
R1023																	
R1024																	
R1025																	
R1026																	
R1027																	
R1028																	
R1029																	
R1030																	
R1031																	
R1032																	
R1033																	
R1034																	
R1035																	
R1036																	
R1037																	
R1038																	
R1039																	
R1040																	
R1041																	
R1042																	
R1043																	
R1044																	
R1045																	
R1046																	
R1047																	
R1048																	
R1049																	
R1050																	
R1051																	
R1052																	
R1053																	
R1054																	
R1055																	
R1056																	
R1057																	
R1058	325																
R1059																	
R1060																	
R1061																	
R1062																	
R1063																	
R1064																	
R1065																	
R1066																	
R1067																	
R1068																	
R1069																	
R1070																	
R1071																	
R1072																	
R1073																	
R1074																	
R1075																	
R1076																	
R1077																	
R1078																	
R1079																	
R1080																	

Copyright © 2005 IEEE. All rights reserved.
This is an unapproved draft, subject to change

Table 55A–5—P matrix: location 97 to 113

	C97	C98	C99	C100	C101	C102	C103	C104	C105	C106	C107	C108	C109	C110	C111	C112	C113
R1081																	
R1082																	
R1083																	
R1084																	
R1085																	
R1086																	
R1087																	
R1088																	
R1089																	
R1090																	
R1091																	
R1092																	
R1093																	
R1094																	
R1095	310	312	313	314	315	319	320	321	323	324	325						
R1096																	
R1097																	
R1098	310	311	315	318	319	322	324										
R1099																	
R1100																	
R1101																	
R1102																	
R1103																	
R1104																	
R1105	321	322	323														
R1106																	
R1107																	
R1108																	
R1109																	
R1110	320	323	325														
R1111																	
R1112																	
R1113																	
R1114																	
R1115																	
R1116																	
R1117																	
R1118																	
R1119																	
R1120																	
R1121																	
R1122																	
R1123																	
R1124																	
R1125																	
R1126																	
R1127																	
R1128																	
R1129																	
R1130																	
R1131																	
R1132																	
R1133																	
R1134																	
R1135																	
R1136																	
R1137																	
R1138																	
R1139																	
R1140																	

Copyright © 2005 IEEE. All rights reserved.
This is an unapproved draft, subject to change

Table 55A–5—P matrix: location 97 to 113

	C97	C98	C99	C100	C101	C102	C103	C104	C105	C106	C107	C108	C109	C110	C111	C112	C113
R1141																	
R1142																	
R1143																	
R1144																	
R1145																	
R1146																	
R1147																	
R1148																	
R1149																	
R1150																	
R1151																	
R1152																	
R1153																	
R1154																	
R1155																	
R1156																	
R1157																	
R1158																	
R1159																	
R1160	325																
R1161																	
R1162																	
R1163	322	323	325														
R1164																	
R1165																	
R1166																	
R1167																	
R1168																	
R1169																	
R1170																	
R1171																	
R1172																	
R1173																	
R1174																	
R1175																	
R1176																	
R1177																	
R1178																	
R1179																	
R1180																	
R1181																	
R1182																	
R1183																	
R1184																	
R1185																	
R1186																	
R1187																	
R1188																	
R1189																	
R1190																	
R1191																	
R1192	325																
R1193																	
R1194																	
R1195																	
R1196																	
R1197																	
R1198																	
R1199																	
R1200																	

Copyright © 2005 IEEE. All rights reserved.
This is an unapproved draft, subject to change

Table 55A–5—P matrix: location 97 to 113

	C97	C98	C99	C100	C101	C102	C103	C104	C105	C106	C107	C108	C109	C110	C111	C112	C113
R1201																	
R1202																	
R1203																	
R1204																	
R1205																	
R1206																	
R1207																	
R1208																	
R1209																	
R1210																	
R1211																	
R1212																	
R1213																	
R1214																	
R1215																	
R1216																	
R1217																	
R1218																	
R1219																	
R1220																	
R1221																	
R1222																	
R1223																	
R1224																	
R1225																	
R1226																	
R1227																	
R1228																	
R1229																	
R1230																	
R1231																	
R1232																	
R1233																	
R1234																	
R1235																	
R1236																	
R1237																	
R1238																	
R1239																	
R1240																	
R1241																	
R1242																	
R1243																	
R1244																	
R1245																	
R1246																	
R1247																	
R1248																	
R1249	322	323	324														
R1250																	
R1251																	
R1252																	
R1253																	
R1254																	
R1255																	
R1256																	
R1257																	
R1258																	
R1259	319	321	324														
R1260																	

Copyright © 2005 IEEE. All rights reserved.
This is an unapproved draft, subject to change

Table 55A–5—P matrix: location 97 to 113

	C97	C98	C99	C100	C101	C102	C103	C104	C105	C106	C107	C108	C109	C110	C111	C112	C113
R1261																	
R1262	315	316	317	320	321	322	324										
R1263																	
R1264																	
R1265																	
R1266																	
R1267																	
R1268																	
R1269																	
R1270																	
R1271																	
R1272																	
R1273																	
R1274																	
R1275																	
R1276																	
R1277																	
R1278																	
R1279																	
R1280																	
R1281																	
R1282																	
R1283	316	317	319	320	322												
R1284																	
R1285																	
R1286																	
R1287																	
R1288	325																
R1289																	
R1290																	
R1291																	
R1292																	
R1293																	
R1294																	
R1295																	
R1296																	
R1297																	
R1298																	
R1299																	
R1300																	
R1301																	
R1302																	
R1303																	
R1304																	
R1305																	
R1306																	
R1307																	
R1308																	
R1309																	
R1310																	
R1311																	
R1312																	
R1313																	
R1314																	
R1315																	
R1316																	
R1317																	
R1318																	
R1319																	
R1320																	

Copyright © 2005 IEEE. All rights reserved.
This is an unapproved draft, subject to change

Table 55A–5—P matrix: location 97 to 113

	C97	C98	C99	C100	C101	C102	C103	C104	C105	C106	C107	C108	C109	C110	C111	C112	C113
R1321																	
R1322																	
R1323																	
R1324																	
R1325																	
R1326																	
R1327																	
R1328																	
R1329																	
R1330																	
R1331	325																
R1332																	
R1333																	
R1334																	
R1335	316	317	318	319	320	321	322	324	325								
R1336	325																
R1337																	
R1338																	
R1339																	
R1340																	
R1341																	
R1342																	
R1343																	
R1344																	
R1345																	
R1346																	
R1347																	
R1348																	
R1349																	
R1350																	
R1351																	
R1352																	
R1353																	
R1354																	
R1355																	
R1356	321	324	325														
R1357																	
R1358																	
R1359																	
R1360																	
R1361	320	321	322														
R1362																	
R1363																	
R1364																	
R1365																	
R1366																	
R1367																	
R1368																	
R1369																	
R1370																	
R1371																	
R1372																	
R1373																	
R1374																	
R1375																	
R1376																	
R1377																	
R1378																	
R1379	322	323	325														
R1380																	

Copyright © 2005 IEEE. All rights reserved.
This is an unapproved draft, subject to change

Table 55A–5—P matrix: location 97 to 113

	C97	C98	C99	C100	C101	C102	C103	C104	C105	C106	C107	C108	C109	C110	C111	C112	C113
R1381																	
R1382																	
R1383																	
R1384																	
R1385																	
R1386																	
R1387																	
R1388																	
R1389																	
R1390																	
R1391																	
R1392																	
R1393																	
R1394																	
R1395																	
R1396	320	322	325														
R1397																	
R1398																	
R1399	318	320	324														
R1400																	
R1401																	
R1402																	
R1403																	
R1404																	
R1405																	
R1406																	
R1407																	
R1408																	
R1409																	
R1410																	
R1411																	
R1412																	
R1413																	
R1414																	
R1415																	
R1416																	
R1417																	
R1418																	
R1419																	
R1420																	
R1421																	
R1422																	
R1423																	
R1424																	
R1425																	
R1426																	
R1427																	
R1428																	
R1429																	
R1430																	
R1431																	
R1432																	
R1433																	
R1434																	
R1435																	
R1436																	
R1437																	
R1438																	
R1439																	
R1440																	

Copyright © 2005 IEEE. All rights reserved.
This is an unapproved draft, subject to change

Table 55A–5—P matrix: location 97 to 113

	C97	C98	C99	C100	C101	C102	C103	C104	C105	C106	C107	C108	C109	C110	C111	C112	C113
R1441																	
R1442																	
R1443																	
R1444																	
R1445																	
R1446																	
R1447																	
R1448																	
R1449																	
R1450																	
R1451																	
R1452																	
R1453																	
R1454																	
R1455																	
R1456																	
R1457																	
R1458																	
R1459																	
R1460																	
R1461																	
R1462																	
R1463																	
R1464																	
R1465	313	314	315	316	317	320	321	322	324								
R1466																	
R1467																	
R1468																	
R1469																	
R1470																	
R1471																	
R1472																	
R1473																	
R1474																	
R1475																	
R1476																	
R1477																	
R1478																	
R1479																	
R1480																	
R1481																	
R1482																	
R1483																	
R1484																	
R1485																	
R1486																	
R1487																	
R1488																	
R1489																	
R1490																	
R1491																	
R1492																	
R1493																	
R1494																	
R1495																	
R1496																	
R1497																	
R1498																	
R1499	317	318	322	323	324												
R1500																	

Copyright © 2005 IEEE. All rights reserved.
This is an unapproved draft, subject to change

Table 55A–5—P matrix: location 97 to 113

	C97	C98	C99	C100	C101	C102	C103	C104	C105	C106	C107	C108	C109	C110	C111	C112	C113
R1501																	
R1502																	
R1503																	
R1504																	
R1505																	
R1506	312	314	315	316	317	320	321										
R1507																	
R1508																	
R1509																	
R1510																	
R1511																	
R1512																	
R1513																	
R1514																	
R1515																	
R1516																	
R1517																	
R1518																	
R1519																	
R1520																	
R1521																	
R1522																	
R1523																	
R1524																	
R1525																	
R1526																	
R1527																	
R1528																	
R1529																	
R1530																	
R1531																	
R1532																	
R1533																	
R1534																	
R1535																	
R1536																	
R1537																	
R1538																	
R1539																	
R1540																	
R1541																	
R1542																	
R1543																	
R1544																	
R1545																	
R1546																	
R1547																	
R1548																	
R1549																	
R1550																	
R1551																	
R1552																	
R1553																	
R1554																	
R1555																	
R1556																	
R1557																	
R1558																	
R1559																	
R1560																	

Copyright © 2005 IEEE. All rights reserved.
This is an unapproved draft, subject to change

Table 55A–5—P matrix: location 97 to 113

	C97	C98	C99	C100	C101	C102	C103	C104	C105	C106	C107	C108	C109	C110	C111	C112	C113
R1561																	
R1562																	
R1563																	
R1564																	
R1565																	
R1566																	
R1567																	
R1568																	
R1569																	
R1570																	
R1571																	
R1572																	
R1573																	
R1574																	
R1575																	
R1576																	
R1577																	
R1578																	
R1579																	
R1580																	
R1581																	
R1582																	
R1583																	
R1584																	
R1585																	
R1586																	
R1587	324																
R1588																	
R1589																	
R1590																	
R1591																	
R1592																	
R1593																	
R1594																	
R1595																	
R1596																	
R1597																	
R1598																	
R1599																	
R1600																	
R1601																	
R1602																	
R1603																	
R1604																	
R1605																	
R1606																	
R1607																	
R1608																	
R1609																	
R1610																	
R1611																	
R1612	316	317	320	322	323	324	325										
R1613																	
R1614																	
R1615																	
R1616																	
R1617																	
R1618																	
R1619																	
R1620																	

Copyright © 2005 IEEE. All rights reserved.
This is an unapproved draft, subject to change

Table 55A–5—P matrix: location 97 to 113

	C97	C98	C99	C100	C101	C102	C103	C104	C105	C106	C107	C108	C109	C110	C111	C112	C113
R1621																	
R1622																	
R1623																	
R1624																	
R1625																	
R1626																	
R1627																	
R1628																	
R1629																	
R1630																	
R1631																	
R1632																	
R1633																	
R1634																	
R1635																	
R1636																	
R1637																	
R1638																	
R1639																	
R1640																	
R1641	322	323	324														
R1642																	
R1643																	
R1644																	
R1645																	
R1646																	
R1647																	
R1648																	
R1649																	
R1650																	
R1651																	
R1652																	
R1653																	
R1654																	
R1655																	
R1656																	
R1657																	
R1658																	
R1659																	
R1660																	
R1661																	
R1662																	
R1663																	
R1664	323	324	325														
R1665																	
R1666																	
R1667	322																
R1668																	
R1669																	
R1670																	
R1671																	
R1672																	
R1673																	
R1674																	
R1675																	
R1676																	
R1677																	
R1678																	
R1679																	
R1680																	

Copyright © 2005 IEEE. All rights reserved.
This is an unapproved draft, subject to change

Table 55A–5—P matrix: location 97 to 113

	C97	C98	C99	C100	C101	C102	C103	C104	C105	C106	C107	C108	C109	C110	C111	C112	C113
R1681																	
R1682																	
R1683																	
R1684																	
R1685																	
R1686																	
R1687																	
R1688																	
R1689																	
R1690																	
R1691																	
R1692																	
R1693																	
R1694																	
R1695	321	322	323	324	325												
R1696																	
R1697																	
R1698																	
R1699	324																
R1700																	
R1701																	
R1702																	
R1703																	
R1704																	
R1705																	
R1706																	
R1707																	
R1708																	
R1709																	
R1710																	
R1711																	
R1712																	
R1713																	
R1714																	
R1715	316	318	319	320	321	322	325										
R1716																	
R1717																	
R1718																	
R1719																	
R1720																	
R1721																	
R1722																	
R1723																	

Copyright © 2005 IEEE. All rights reserved.
This is an unapproved draft, subject to change