WDM PASSIVE STAR - PROTOCOLS AND PERFORMANCE ANALYSIS

Aura Ganz Zahava Koren *
Department of Electrical & Computer Engineering
*Department of Industrial Engineering & Operations Research
University of Massachusetts, Amherst, MA 01003

Abstract

Optical fibers utilizing Wavelength Division Multiplexing (WDM) are the prevailing transmission medium for the next generation of local area optical networks. We investigate a WDM transmissive star network, in which each node has one tunable transmitter with limited tuning capability and multiple fixed receivers. Two synchronous channel access protocols requiring no pretransmission penalty are considered: random access and fixed transmission scheduling. A meaningful evaluation of these systems must incorporate the multiple channel interconnection obtained by WDM, the finite number of high speed buffers at each node, and the nonhomogeneous system characteristics. Due to the finite number of buffers and the system asymmetry, an exact analysis becomes prohibitively complex for even moderately sized systems. In this paper we present an efficient approximate analysis with drastically reduced computational complexity, incorporating all of the above system characteristics. In spite of the reduced complexity, the presented approach produces very accurate results and can serve in producing the most cost-effective system design for given performance requirements.

1. Introduction

Wavelength division multiplexing (WDM) is the state-of-the-art optical transmission scheme for the next generation of local area networks [1,2]. The potential of sharing the enormous bandwidth provided by the WDM among all the users of a network is the major attraction of lightwave technology for multiuser applications. As a result, there have been many recent proposals for various architectures for optical multiuser communication. The passive star is emerging as one of the dominant LAN configurations for tapping the high bandwidth provided by the WDM technology [1,2]. In addition, the WDM star is an attractive approach to the next generation of high performance packet switches [8]. The WDM star configuration has not only been proven to be technologically feasible, but was also shown to increase the accessible link bandwidth by several orders of magnitude over conventional fiber optic star systems. However, the control of the WDM system has proven to be a major obstacle in turning the vast link capacity into a system wide, user accessible capacity. Currently proposed solutions yield in fact a system capacity which is only a small fraction of the fiber optic-link bandwidth.

Due to practical considerations in WDM systems, each node is expected to be able to transmit/receive on only a few wavelengths at a time. Today's lasers suffer from line broadening due to phase noise and can be tuned over a limited frequency range. One class of WDM star networks can be devised by the use of fixed transmitters and fixed receivers [7]. These networks employ multihop topologies in which a significant fraction of the system capacity is lost due to data forwarding. The second class of WDM networks assumes *single hop* communication [3,4]. This communication is obtained by employing tunable transmitters and/or receivers. The solutions presented in [3,4] assume that both the transmitter and the receiver are tunable over the entire spectrum range and require the use of a common setup channel to coordinate between the transmitters and receivers prior to transmission. These solutions are suitable for circuit switched communication. However, for the packet switched case, the traffic on the setup channel would limit the system throughput to much less than the fiber bandwidth. Due to the enormous increase in transmission speeds and the

CH2979-3/91/0000-0991 $1.00 © 1991 IEEE

mismatch between the speed of optics and electronics, the WDM system performance becomes dominated by the propagation delays and the protocol processing time. Therefore, control with no real time processing prior to the packet transmission should be preferred in these systems.

In this paper, we investigate systems in which each node has one tunable transmitter with limited tuning capabilities, and multiple fixed receivers. We assume that the assignment of wavelengths to transmitters and receivers will result in single hop communication. Given the above control considerations, we investigate WDM star systems employing protocols requiring no pretransmission coordination. Two synchronous protocols suitable for this type of systems are proposed: multichannel slotted ALOHA and random TDMA. These protocols were investigated in [5] assuming a symmetric system with one fixed receiver and one tunable transmitter with unlimited tuning capability. However, high bandwidth networks are required to support a wide range of applications, leading to non-homogeneous system configurations. Therefore, the emerging optical LAN communication systems are characterized by a finite number of high speed buffers at each node, asymmetric node parameters, multiple wavelengths interconnection and the use of tunable components with limited tuning capabilities. Still, the availability of general purpose, practical analytical models for analyzing such systems has remained extremely limited.

In this paper, we present an approximate analysis for an asymmetric communication system consisting of N nodes with different buffer capacities, packet generation rates and packet destinations distributions. By using the introduced model along with a hardware cost function of the system buffers, transmitters and receivers, an optimal system design can be obtained for a required system performance.

The general analytical model appears in section 2 and the analyses for the multichannel slotted ALOHA and the random TDMA protocols are presented in sections 3 and 4, respectively. The results obtained from the presented approximation have been validated by a detailed system simulation. The comparison showed discrepancies of at most 5% for the node throughput and at most 10% for the average node delay. The validation results and the numerical comparison of the performance of several system designs appear in section 5. Section 6 concludes the paper.

2. The Model

In this paper we analyze a communication system consisting of N nodes, interconnected by a WDM star using W ($1 \leq W \leq N$) identical channels. The channels are obtained by wavelength division multiplexing (WDM), i.e. each channel corresponds to a different wavelength. Node i has one tunable transmitter with limited tuning capabilities and r_i fixed receivers (see Figure 1). Let T_i denote the set of wavelengths that the transmitter of node i can tune to (T_i is the tunability range of node i), $|T_i| = t_i$. Let R_i denote the set of wavelengths that node i can simultaneously receive from, $|R_i| = r_i$. This leads to the division of the N nodes into W (not necessarily disjoint) sets $A_1, ..., A_W$ according to their transmission channel, with $A_i = \{m | 1 \leq m \leq N, i \in T_m\}$ and W (not necessarily disjoint) sets $B_1, ..., B_W$ according to their reception channel, with $B_i = \{m | 1 \leq m \leq N, i \in R_m\}$.

We assume that the assignment of channels to transmitters and receivers is such that *single hop* communication is obtained, i.e. each node can transmit to any other node in a single transmission. The sets T_i and R_i must obey the following requirements:

1. $\bigcup_{i=1}^{N} T_i = \{1, ..., W\}$, i.e., each channel has at least one transmitter assigned to it.

2. $\bigcup_{i=1}^{N} R_i = \{1, ..., W\}$, i.e., each channel has at least one receiver assigned to it.

3. $T_i \bigcap R_j \neq \emptyset$, $\forall i, j, i \neq j$, i.e., each node can transmit to any other node in a single hop.

Node i has a buffer capacity of L_i packets. Time is divided into slots of fixed size, and all nodes are synchronized to the beginnings of the slots. At the beginning of each time slot, node i (provided that its buffer is not full) generates a new packet with probability λ_i. The packet transmission time is one slot. The packet is destined to node m with probability d_{im}, ($\sum_{m=1}^{N} d_{im} = 1$ for $i = 1, ..., N$).

We define a *busy* node as a node with at least one packet in its buffer. At the beginning of each slot, busy nodes transmit according to a given channel access protocol. At the end of a successful transmission the packet leaves the system.

In the following sections we present and analyze two protocols: the multichannel slotted ALOHA

and the random time division multiple access (TDMA).

For both protocols, analysis is based on defining a discrete time Markov chain for each node. We assume the following order of actions within the slot:

1. Arrival. 2. Transmission. 3. End of transmission.

The chain is embedded after the new arrival (if any) and before the transmission (if any).

The introduced analysis is used to calculate the following performance measures:

TP - the system throughput, defined as the average number of packets whose transmission successfully ends per slot ($0 \leq TP \leq W$).

TP_i - the throughput of node i, defined as the average number of packets originated at node i, whose transmission successfully ends per slot ($0 \leq TP_i \leq 1$).

Q_i - the average number of packets queued in the buffer of node i, including the one being transmitted, ($0 \leq Q_i \leq L_i$).

D_i - the average packet delay at node i, where the packet delay is defined as the number of time slots that a packet resides in the system.

($i = 1, .., N$).

3. Slotted ALOHA

3.1 Protocol Description

At the beginning of each slot, busy node i with a packet destined to node j, transmits with probability p_i, on a channel randomly chosen among the $T_i \bigcap R_j$ channels leading from i to j. Channel collisions occur when two or more busy nodes attempt transmission on the same channel at the same time, and collided packets must be retransmitted. The duration of a collision is one slot. A successful transmission takes place when a single packet is transmitted on a channel.

3.2 Analysis

For an exact analysis of the system described in the previous section and obeying the multichannel slotted ALOHA protocol, the state description must include at least $(X_1, ..., X_N)$, where X_i is the number of packets queued at node i, $0 \leq X_i \leq L_i$. This multi-dimensional state description leads to an exponential number of states, necessitating approximate solutions with drastically reduced complexity. In this section we adopt an approximate analysis based on the model first presented by the authors in [6]. A similar model appears in [9]. Each node is isolated and regarded as a separate unit. The multi-dimensional state description of the whole system, namely, $(X_1, ..., X_N)$ is replaced by separate state descriptions for each node. The state description of node i is X_i, the number of packets in its buffer, $0 \leq X_i \leq L_i$. The interference of the other nodes is taken into account in the calculation of the probability that node i successfully transmits, denoted by $S^{(i)}$. This computation uses as parameters the marginal state probabilities of the other $N-1$ nodes (while assuming statistical independence among them), rather than using the joint probabilities as an exact analysis would have done. By not requiring any joint probabilities of the different nodes, this approach drastically reduces the computational complexity.

Let $P^{(i)}$ denote the transition probability matrix for node i. $P^{(i)}_{jk}$ represents the transition probability from j packets in the buffer of node i at the beginning of a slot to k packets in the buffer at the beginning of the next slot (after the new packet arrivals). To calculate the elements of the matrix $P^{(i)}$ we use $S^{(i)}$, the probability of a successful transmission by node i. Denote,

$$\beta^{(i)} = \lambda_i(1 - S^{(i)}) \;\; ; \;\; \sigma^{(i)} = S^{(i)}(1 - \lambda_i)$$

$\beta^{(i)}$ and $\sigma^{(i)}$ can be interpreted as the "birth" and "death" probabilities at state j, i.e., the probabilities that the state increases by 1 or decreases by 1, respectively (except for state 0 for which the "birth" probability is λ_i).

The transition probabilities for node i (see Figure 2), are then given by

$$P^{(i)}_{jk} = \begin{cases} 1 - \lambda_i & j = k = 0 \\ \lambda_i & j = 0,\ k = 1 \\ \sigma^{(i)} & 0 < j \leq L_i,\ k = j - 1 \\ 1 - \beta^{(i)} - \sigma^{(i)} & 0 < j < L_i,\ k = j \\ \beta^{(i)} & 0 < j < L_i,\ k = j + 1 \\ 1 - \sigma^{(i)} & j = k = L_i \\ 0 & \text{otherwise} \end{cases} \tag{1}$$

Let $\Pi^{(i)}$ denote the steady-state probability vector of the above Markov chain, where $\Pi^{(i)}_j$ denotes the steady-state probability that node i has j packets in its buffer at the beginning of a slot (after the new packet arrivals). By solving the set of

equations,

$$\Pi^{(i)}P^{(i)} = \Pi^{(i)} \; ; \quad \sum_{j=0}^{L_i} \Pi_j^{(i)} = 1 \qquad (2)$$

we obtain

$$\Pi_j^{(i)} = \frac{\lambda_i}{\beta^{(i)}} \left(\frac{\beta^{(i)}}{\sigma^{(i)}}\right)^j \Pi_0^{(i)} \; ; \; 0 < j \leq L_i \qquad (3)$$

and,

$$\Pi_0^{(i)} = \left[1 + \frac{\lambda_i}{\sigma^{(i)}} \frac{(\frac{\beta^{(i)}}{\sigma^{(i)}})^{L_i} - 1}{\frac{\beta^{(i)}}{\sigma^{(i)}} - 1}\right]^{-1} \; ; \; i = 1, ..., N \qquad (4)$$

Since the successful transmission of node i depends on the occupancy of the other nodes, $S^{(i)}$ is a function of the steady-state probabilities of all nodes, specifically of $(\Pi_0^{(1)}, .., \Pi_0^{(N)})$ (as will be shown next). By substituting $S^{(i)}$ as a function of $(\Pi_0^{(1)}, .., \Pi_0^{(N)})$ in equation (4), we obtain N non-linear equations with N unknowns $(\Pi_0^{(1)}, ..., \Pi_0^{(N)})$. We solve these equations by choosing initial values for $(\Pi_0^{(1)}, ..., \Pi_0^{(N)})$ and iterating until the $\Pi_0^{(i)}$'s converge. Assuming that $\lambda_i > 0$ and $S^{(i)} > 0$ for each i, the Markov chain for each node is ergodic, hence having a unique steady-state distribution. We are, therefore, assured of converging to the correct values.

It remains to calculate $S^{(i)}$, the probability that node i successfully transmits, given node i is busy and decides to transmit. Let $\delta_k^{(i)}$ denote the probability that node i will transmit on channel k. Node i will attempt to transmit the first packet in its buffer. Given that this packet destination is m the channel for transmission is chosen at random among the channels in $T_i \bigcap R_m$. $\delta_k^{(i)} = 0$ for $k \notin T_i$, and for $k \in T_i$, we obtain

$$\delta_k^{(i)} = \sum_{m \in B_k} \frac{1}{|T_i \bigcap R_m|} d_{im} \qquad (5)$$

Given that node i chose channel k, its packet will not collide if no other busy node chose to transmit on the same channel at the same time slot. The probability that node j ($j \neq i$) will transmit on the same channel is $\delta_k^{(j)} p_j \left(1 - \Pi_0^{(j)}\right)$, hence the probability that node j will not transmit on channel k is $1 - \delta_k^{(j)} p_j \left(1 - \Pi_0^{(j)}\right)$. Averaging over all channels yields

$$S^{(i)} = p_i \sum_{k=1}^{W} \delta_k^{(i)} \prod_{j \neq i} \left[1 - \delta_k^{(j)} p_j \left(1 - \Pi_0^{(j)}\right)\right] \qquad (6)$$

Once the $\Pi_j^{(i)}$'s are obtained, the throughput of node i, TP_i, can be calculated as follows: Given node i is busy, the probability of a successful transmission is $S^{(i)}$, hence,

$$TP_i = (1 - \Pi_0^{(i)}) S^{(i)} \qquad (7)$$

The total system throughput, TP is given by

$$TP = \sum_{i=1}^{N} TP_i \qquad (8)$$

The average queue length at node i, Q_i, can be obtained using

$$Q_i = \sum_{j=0}^{L_i} j \Pi_j^{(i)} \qquad (9)$$

and the average delay of a packet at node i, D_i, can be found by using Little's theorem

$$D_i = \frac{Q_i}{TP_i} \qquad (10)$$

4. Random TDMA

4.1 Protocol Description

Each node follows a slot transmission schedule *trans*, with *trans*[i] determining the channel on which node i will be allowed to transmit. If node i is not scheduled for transmission, *trans*[i] = 0.

At the beginning of each slot, a busy node i with *trans*[i] = $k > 0$ is given permission to transmit on channel k to any of the nodes in the set B_k (the set of nodes that receive on channel k). Node i can choose from its buffer any of the packets whose destination is in the set B_k, and it will transmit successfully if it has such a packet.

The following algorithm constructs the collision free transmission schedule *trans*:

1. $\Omega = \{1, 2, ..., W\}$, $\hat{A}_j = A_j$ *for* $j = 1, ..., W$.
2. Choose at random one channel in the set Ω, say channel k.
3. Choose at random one node among the nodes in set $\hat{A}_k$, say node i.
4. *trans*[i] = k,
   $\hat{A}_j = \hat{A}_j - \{i\}$ for $j = 1, ..., W$; $\Omega = \Omega - \{k\}$.

5. If $\Omega \neq \emptyset$ goto 2.

The above algorithm has the following properties:

a) Each channel is assigned exactly one transmitting node per slot (i.e. at most W simultaneous transmissions occur per slot);

b) Each node will transmit at most one packet per slot (i.e. obeying the single transmitter per node limitation);

c) Each node will transmit on one of the channels in its transmission range;

d) The algorithm can be implemented in a distributed manner by each of the system's nodes, given each node has the same random number generator and the same seed.

4.2 Analysis

An exact analysis of the system using the random TDMA protocol should incorporate in the state description the destinations of all the packets in the buffer. Specifically, the exact state description of node i is given by $(Y_1, ..., Y_{L_i})$, where Y_k, $0 \leq Y_k \leq N$, describes the destination of the k'th packet in the buffer. If $Y_k = 0$, the k'th location in the buffer is empty. The above state description leads to an exponential number of states, requiring an approximate analysis with reduced complexity. Similarly to the previous section, we record only the *number* of packets in the buffer and not their destinations. The state of the Markov chain of node i, is given by X_i, the number of packets in its buffer, $0 \leq X_i \leq L_i$,

Let $P^{(i)}$ denote the transition probability matrix for node i. $P^{(i)}_{jk}$ represents the transition probability from j packets in the buffer of node i at the beginning of a slot to k packets in the buffer at the beginning of the next slot (after the new packet arrivals). Let $\Pi^{(i)}$ denote the steady-state probability vector of the above Markov chain, where $\Pi^{(i)}_j$ denotes the steady-state probability that node i has j packets in its buffer at the beginning of a slot.

$\Pi^{(i)}$ is obtained by solving the set of equations (2). To calculate $P^{(i)}$ we define $S^{(i)}_j$, the probability of a successful transmission by node i given it has j packets in its buffer. Note that for the random TDMA protocol, as opposed to the multichannel slotted ALOHA protocol, the probability of a successful transmission depends both on the node i and on the number of packets in its buffer, j. This is due to the fact that a node chooses for transmission a suitable packet among all the packets in its buffer. Denote

$$\beta^{(i)}_j = \lambda_i(1 - S^{(i)}_j) \quad ; \quad \sigma^{(i)}_j = S^{(i)}_j(1 - \lambda_i)$$

The transition probabilities for node i (see Figure 3), are then given by

$$P^{(i)}_{jk} = \begin{cases} 1 - \lambda_i & j = k = 0 \\ \lambda_i & j = 0,\ k = 1 \\ \sigma^{(i)}_j & 0 < j \leq L_i,\ k = j - 1 \\ 1 - \beta^{(i)}_j - \sigma^{(i)}_j & 0 < j < L_i,\ k = j \\ \beta^{(i)}_j & 0 < j < L_i,\ k = j + 1 \\ 1 - \sigma^{(i)}_j & j = k = L_i \\ 0 & \text{otherwise} \end{cases} \tag{11}$$

To calculate $S^{(i)}_j$, we first assume that channel k has been assigned to node i. Node i will successfully transmit if at least one packet in its buffer is destined to any of the destinations receiving on channel k. With j packets in the buffer, the probability of this last event is $1 - (1 - \Delta^{(i)}_k)^j$ where $\Delta^{(i)}_k = \sum_{m \in B_k} d_{im}$. Define $\alpha^{(i)}_k$ as the probability that channel k will be assigned to node i in a specific slot ($\sum_{i=1}^{N} \alpha^{(i)}_k = 1 \ \ for\ k = 1, ..., W$). Using $\Delta^{(i)}_k$ and $\alpha^{(i)}_k$ we obtain

$$S^{(i)}_j = \sum_{k=1}^{W} \alpha^{(i)}_k \left[1 - \left(1 - \Delta^{(i)}_k\right)^j\right] \tag{12}$$

It remains now to calculate the channel assignment probability $\alpha^{(i)}_k$. The exact calculation of $\alpha^{(i)}_k$ is a complex combinatorial problem, due to the asymmetry of the sets T_i and R_i. For a given system, all feasible assignments of channels to nodes can be enumerated, enabling the calculation of the probability that channel k will be assigned to node i. For our analysis we suggest the following approximation for $\alpha^{(i)}_k$: We observe that $\alpha^{(i)}_k$ tends to decrease with higher values of t_i and to increase with higher values of t_j, $j \neq i, j \in A_k$. Assuming that $\alpha^{(i)}_k$ is proportional to t_j, $j \neq i$

and inversely proportional to t_i, $\alpha_k^{(i)}$ can be approximated by

$$\alpha_k^{(i)} = C\frac{\prod_{j\in A_k, j\neq i} t_j}{t_i} \tag{13}$$

where C is a normalizing factor. Since $\sum_{i\in A_k} \alpha_k^{(i)} = 1$,

$$C = \left[\sum_{i\in A_k} \frac{\prod_{j\in A_k, j\neq i} t_j}{t_i}\right]^{-1} \tag{14}$$

$S_j^{(i)}$ is now substituted in (11), and the steady-state probabilities are calculated using (2). Using $\Pi^{(i)}$, the throughput of node i is given by

$$TP_i = \sum_{j=1}^{L_i} \Pi_j^{(i)} S_j^{(i)} \tag{15}$$

The system throughput, TP, the average queue length at node i, Q_i and the average packet delay at node i, D_i are given in equations (8), (9) and (10) respectively.

5. Numerical Results

As a specific example we investigated a system consisting of 8 nodes interconnected through 4 channels, and we performed both a validation of the approximate model through simulation, and performance calculations for several system designs and protocols. We considered both homogeneous and nonhomogeneous systems.

We considered three system configurations which differ in the transmitters' tunability range (the sets T_i) and the reception capability of the nodes (the sets R_i), but which have comparable hardware complexity.

System 1: Each transmitter is tuned to two wavelengths, and each node has two receivers. The transmitters' and receivers' wavelengths are given by:
$T_i = \{1,2\}, i = 1,2,3$, $T_i = \{2,3\}, i = 4,5,6$, $T_i = \{3,4\}, i = 7,8$,
$R_1 = \{2,3\}$, $R_i = \{2,4\}, i = 2,3,5,7$, $R_i = \{1,3\}, i = 4,6,8$.

System 2: Each transmitter can tune to one wavelength and each node has four receivers, one for each wavelength. The transmitters' and receivers' wavelengths are given by:
$T_i = \{1\}, i = 1,2$, $T_i = \{2\}, i = 3,4$, $T_i = \{3\}, i = 5,6$, $T_i = \{4\}, i = 7,8$,
$R_i = \{1,2,3,4\}, i = 1,...,8$.

System 3: Each transmitter can tune to all four wavelengths and each node has one receiver, one for each wavelength. The transmitters' and receivers' wavelengths are given by:
$T_i = \{1,2,3,4\}, i = 1,...,8$,
$R_i = \{1\}, i = 1,2$, $R_i = \{2\}, i = 3,4$, $R_i = \{3\}, i = 5,6$, $R_i = \{4\}, i = 7,8$.

Validation: We first test the accuracy of the proposed approximation by comparing the performance measures derived from the analytical model and from detailed system simulation. The performance measures, presented in Tables 1 and 2, are the node throughput TP_i and the average packet delay D_i, as a function of the system load b (the sum of the nodes' packet generation probabilities). For node i we chose the following parameters: the buffer size is $L_i = i$, the packet generation probability is $\lambda_i = i \cdot b/36$, and the destination probabilities d_{im} were chosen so that they are proportional to m (for each i), $d_{im} = 0$ *for* $m = i$, $d_{im} = \frac{m}{N(N+1)/2-i}$ *for* $m \neq i$.
For the multichannel slotted ALOHA protocol, the node transmission probabilities are given by $p_i = 0.02 \cdot i$.

The analysis requires iterating a set of equations until convergence is reached. We chose as convergence test the requirement that the sum of the absolute values of the differences between the components of the vector Π_0 for two consecutive iterations is less than ϵ, where ϵ was chosen as 0.00001. The maximal number of iterations required to reach convergence according to this criterion was 10. Each simulation was run for 1,000,000 slots.

Table 1 and 2 show the analytical and simulation results for System 1 (with the slotted ALOHA protocol) and for System 3 (with the random TDMA protocol), respectively. The discrepancy between the analytical and simulation results for the node throughput is at most 5% and for the node average delay at most 10%.

System Performance: Once the approximation has been validated, we investigate the system behavior as a function of the system load, the channel access protocol and the system hardware design. The results are depicted in Figures 4-6.

For the performance calculations we chose a homogeneous system with packet generation probability $\lambda_i = b/N$, buffer size $L_i = 4$ and $d_{im} = 0$ for $m = i$, $d_{im} = \frac{1}{N-1}$ for $m \neq i$.

Figure 4 compares the performance of the 2 channel access protocols, and Figures 5 and 6 evaluate the effect of the different hardware designs of the three systems.

For the comparison of the slotted ALOHA and random TDMA protocols, we plotted in Figure 4 the average delay versus the system throughput for system 2. We observe that the slotted ALOHA protocol results in lower delays for low system loads, while the random TDMA protocol results in lower delays for moderate to high system loads. These observations are consistent with the single channel behavior of these protocols.

Figures 5 and 6 plot the average delay versus the system throughput for the random TDMA and for the the slotted ALOHA (with $p_i = 0.2$) protocols, respectively. We observe that for both the random TDMA and the slotted ALOHA protocols, system 2 obtains the lowest delay and the highest throughput. Recall that in system 2 every node has 4 receivers, one on each wavelength, and one transmitter tuning to all the wavelengths. Therefore, there are two nodes on each wavelength competing for transmission. In the other systems, the potential number of nodes competing for a channel is substantially higher, i.e., in systems 1 four nodes, and in system 3 eight nodes. This facts lead to a larger TDMA frame, resulting in larger delays. From Figures 5 and 6 we conclude that the best system performance is obtained when the number of receivers per node equals the number of wavelengths. However, when the number of wavelengths is large, this design becomes infeasible due to the large number of receivers required. Therefore, alternative hardware implementations in terms of the tunability range and the number of receivers must be investigated.

6. Conclusions

In this paper a WDM transmissive star network, in which each node has one tunable transmitter with limited tuning capability, and multiple fixed receivers was studied. Two synchronous channel access protocols requiring no pretransmission penalty were presented and evaluated by an efficient approximate analytical model. The analytical model captured the crucial WDM star system parameters such as the multiple channel interconnection, partial tuning capability, finite number of high speed buffers at each node, and the non-homogeneous system characteristics. The introduced analytical model, combined with a hardware cost function for the transmitters and receivers, can produce an optimal system design for a required system performance.

7. References

1. M. S. Goodman, H. Kobrinski, K. W. Loh, "Application of Wavelength Division Multiplexing to Communication Network Architectures," *ICC'86*, Toronto.

2. G. R. Hill, "A Wavelength Routing Approach to Optical Communication Networks," *INFOCOM '88*, New Orleans, LA.

3. N. Mehravari, "Performance and Protocol Improvements for Very High Speed Optical Fiber Local Area Networks Using a Passive Star Topology," *J. of Lightwave Technology*, Vol. LT-8, No. 4, April 1990.

4. I. M. I. Habbab, M. Kavehrad, and C. E. W. Sundberg, "Protocols for Very High Speed Optical Fiber Local Area Networks Using a Passive Star Topology," *J. of Lightwave Technology*, Vol. LT-5, No. 12, December 1987.

5. A. Ganz, "End-to-End Protocols for WDM Star Networks", *IFIP/WG6.1-WG6.4 Workshop on Protocols for High-Speed Networks*, Zurich, Switzerland, May 1989.

6. Z. Koren and A. Ganz, "An Efficient Performance Model for Asymmetric Finite Buffer Systems," *University of Massachusetts*, TR 90-CSE3.

7. A. S. Acampora, M. J. Karol and M. G. Hluchyj, "Multihop Lightwave Networks: A New Approach to Achieve Terabit Capabilities", *ICC'88*, June 1988.

8. H. S. Hinton, "Photonic Switching Fabrics," *IEEE Communications Magazine*, April 1990.

9. I. Lee and J. Silvester, "An Iterative Scheme for Performance Modeling of Slotted ALOHA Packet Radio Networks," *Proc. ICC '82*, Philadelphia, PA, June 1982.

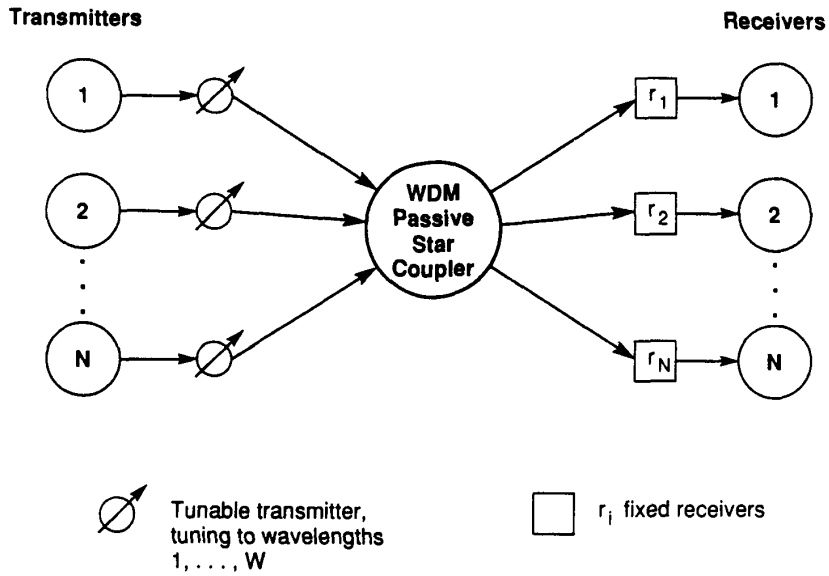

Figure 1 : N Nodes interconnected through a WDM star.

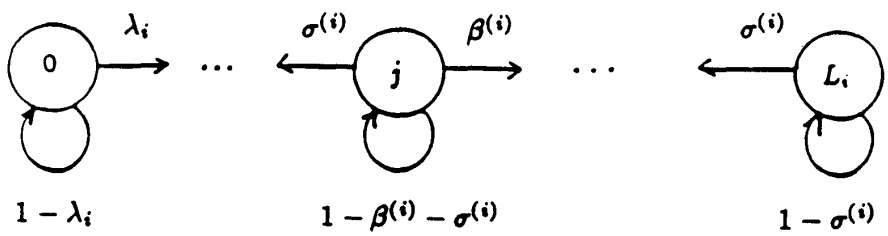

Figure 2 : Markov chain for node i, for the multichannel slotted ALOHA protocol.

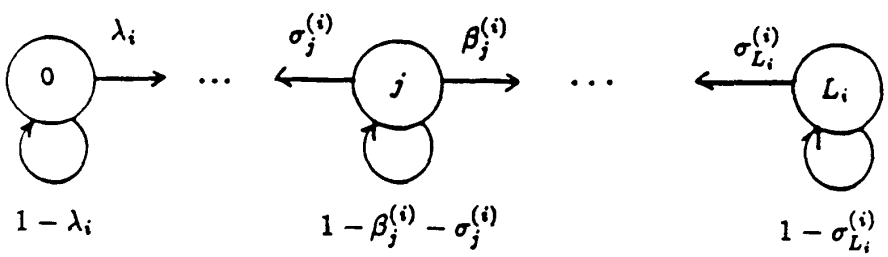

Figure 3 : Markov chain for node i, for the Random TDMA protocol.

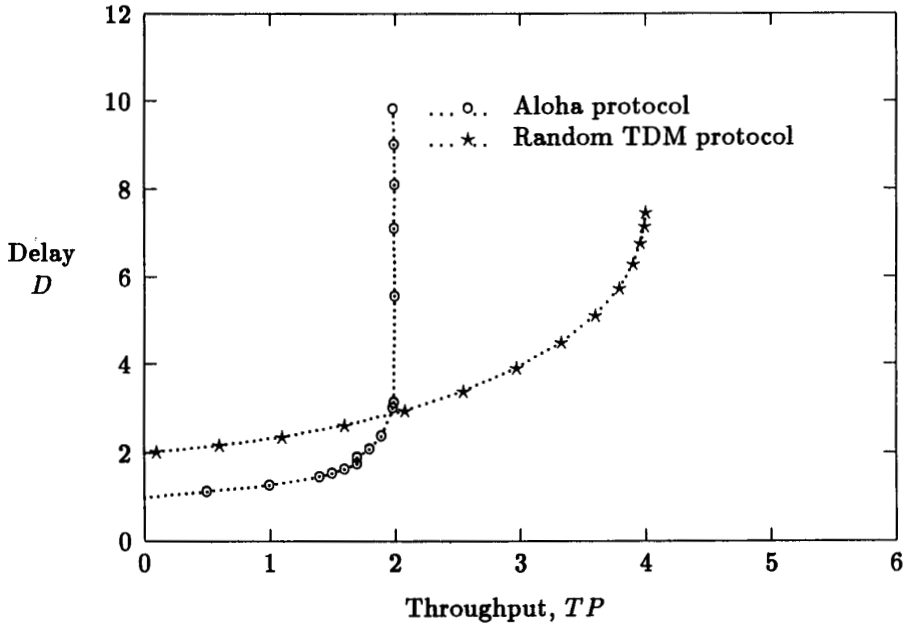

Figure 4: Average packet delay versus system throughput, $N = 8$, $W = 4$, $L_i = 4$, optimal retransmission probabilities for slotted ALOHA.

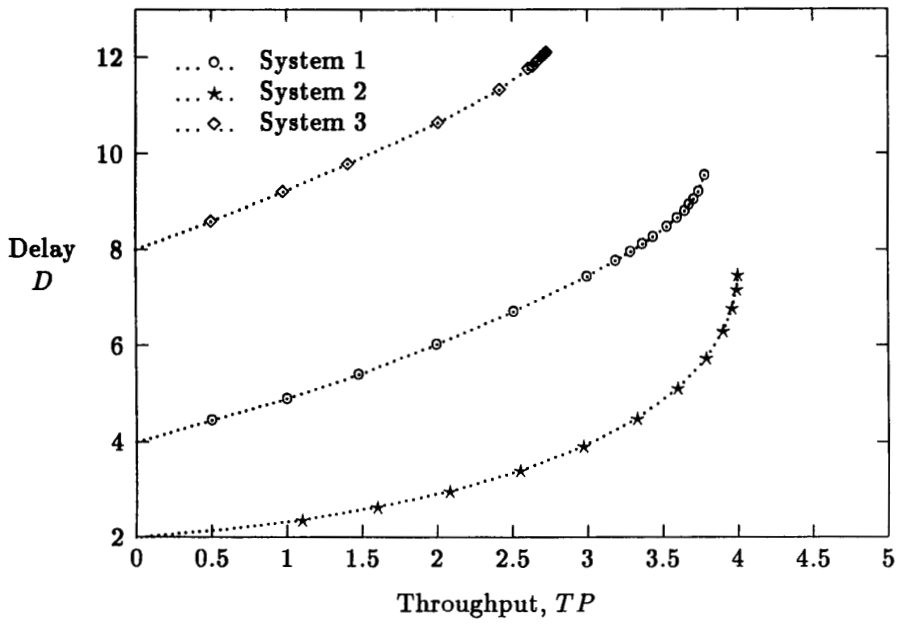

Figure 5: Average packet delay versus system throughput, $N = 8$, $W = 4$, $L_i = 4$, random TDMA protocol.

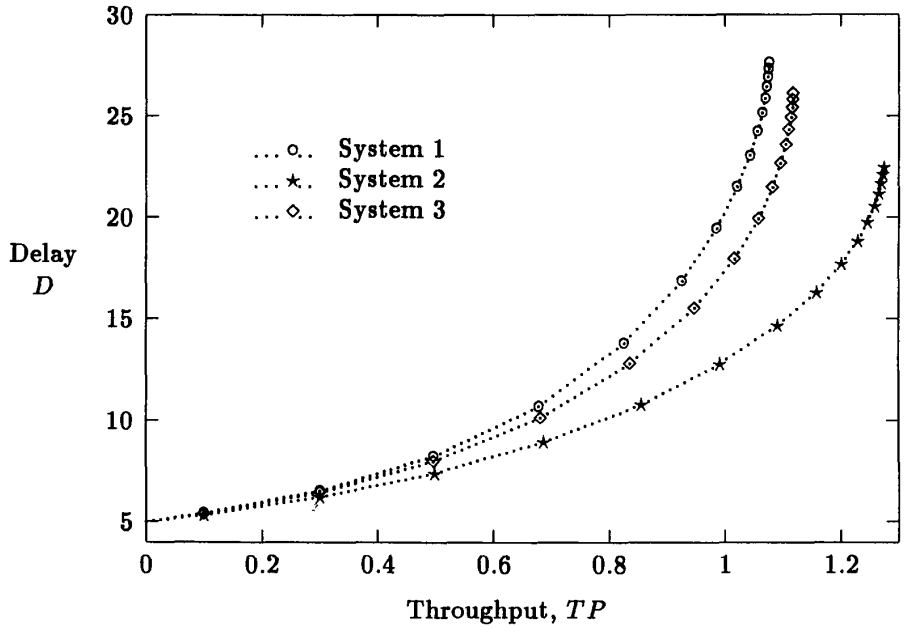

Figure 6: Average packet delay versus system throughput, $N = 8$, $W = 4$, $L_i = 4$, slotted ALOHA, $p_i = 0.2$.

b	TP_4		D_4		TP_8		D_8	
	ana	sim	ana	sim	ana	sim	ana	sim
0.2000	0.0221	0.0227	18.1155	18.4433	0.0444	0.0445	8.6928	8.2511
0.4000	0.0419	0.0420	27.3242	27.6635	0.0885	0.0879	14.7592	14.6928
0.6000	0.0542	0.0532	37.2452	37.9010	0.1245	0.1238	27.9854	28.6479
0.8000	0.0598	0.0599	44.3075	45.1641	0.1385	0.1360	40.7094	42.9776
1.0000	0.0623	0.0615	48.7683	49.9405	0.1412	0.1373	47.4417	49.1822

Table 1: Analytical and simulation results for nodes 4 and 8. Throughput (TP_i) and average delay (D_i) as a function of the system load (b). Multichannel slotted ALOHA protocol, $N = 8$, $W = 4$, buffer sizes $L_i = i$, transmission probabilities $p_i = 0.02i$, tuning range $t_i = 2$, number of receivers $r_i = 2$ (system 1).

b	TP_1		D_1		TP_4		D_4	
	ana	sim	ana	sim	ana	sim	ana	sim
0.2000	0.0053	0.0059	8.0050	8.2538	0.0222	0.0224	8.3038	8.4579
0.4000	0.0103	0.0102	7.9687	7.9852	0.0444	0.0431	8.5459	9.1024
0.6000	0.0149	0.0143	7.9940	7.7944	0.0665	0.0655	8.9101	9.6790
0.8000	0.0192	0.0193	8.0096	8.2238	0.0882	0.0884	9.2137	10.3512
1.0000	0.0233	0.0236	8.0087	7.9304	0.1094	0.1072	9.5666	10.7594

Table 2: Analytical and simulation results for nodes 1 and 4. Throughput (TP_i) and average delay (D_i) as a function of the system load (b). random TDMA protocol, $N = 8$, $W = 4$, buffer sizes $L_i = i$, tuning range $t_i = 4$, number of receivers $r_i = 1$ (system 3).