OFD ANOID MEOWSER KIT

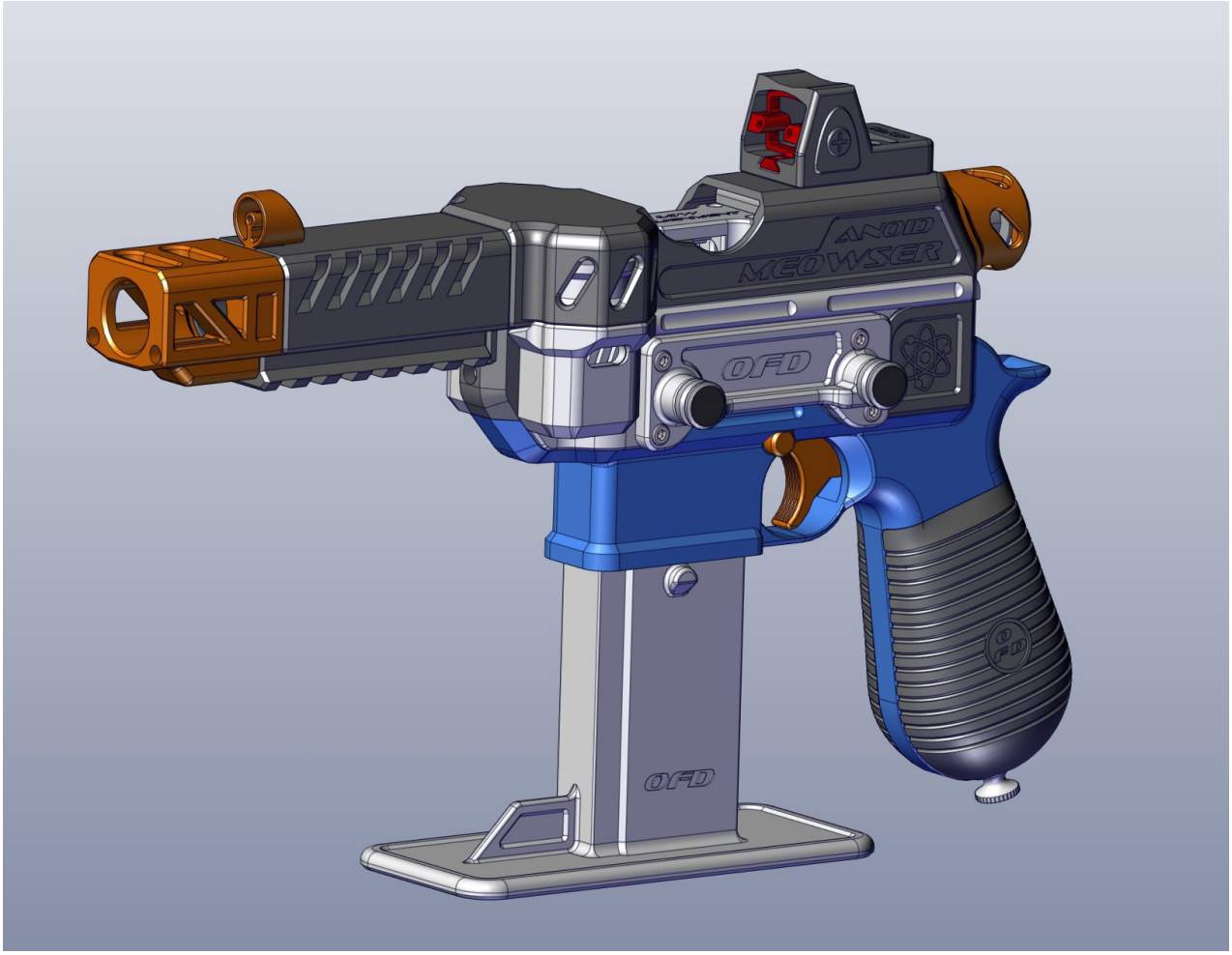

THANK YOU FOR YOUR PURCHASE!

DETAILS

- Powered by the OOD x Eli Wu Neutron solenoid, turn your Meowser into a tactile semi-auto (or select fire w/micro controller) monster!
- Includes:
  - RMR/solenoid compatible uppers
  - New Faux RMR sight w/additional mounting
  - New front and rear sights
  - New RMR reticles
  - New Barrels
  - DL-44 adapter riser to maintain DL-44 compatibility
  - Compatible with all current Meowser parts – go crazy with customization!

LICENSING AND PRODUCTION

- Anoid Meowser is an “All Rights Reserved” product, meaning it can’t be copied or distributed without my permission.
- You have permission to print as many as you like for yourself, but are not allowed to resell files or prints without my permission or coming to an agreement.
- Personal remixes are fine, but files are not allowed to be shared, sold, or posted publically under any circumstance.
- If you wish to sell: 1 purchase = 1 license = 1 sold print, or arrange a licensing fee for roughly 10% of sale price

HARDWARE LIST

(1) Complete Meowser
(1) Assembled Noidcore Straight

For Faux RMR:
(2) M3x8mm Socket head cap screws
(3) M2x5mm Motor screw

ASSEMBLY TIPS

- The uppers have tapered holes for the RMR, so screws will thread into plastic, this is to allow fitment for the faux RMR M3 hardware, Real/Clone RMRs you can purchase on Ali-Express that have 6-32 (~3.5mm screws), and to allow for cases that have M4s – you may have to drill or widen holes if you have a version with M4s **BE CAREFUL INSTALLING RMR – THERE IS LIMITED SCREW ENAGEMENT FROM THE TOP ~2MM OF PLASTIC, THEY CAN STRIP OUT WITH TOO MUCH TORQUE. M2x5 holes also provided to add additional support to RMR – can even add glue if you plan on using roughly!**
- Trigger and Mag release installation is same as Meowser!
- Grease can help thread smoothness
- Be careful not to over-tighten threaded suppressor attachments

PRINT ORIENTATION

- Recommended Print settings (ALL): at least 4 perimeters, 15% infill. 2mm layer height.
- Supports from build plate –Uppers, Back Cap
- Support Everywhere – Faux RMR
- Everything else prints without supports

OPTIONS

SUPPORTS - BUILD PLATE

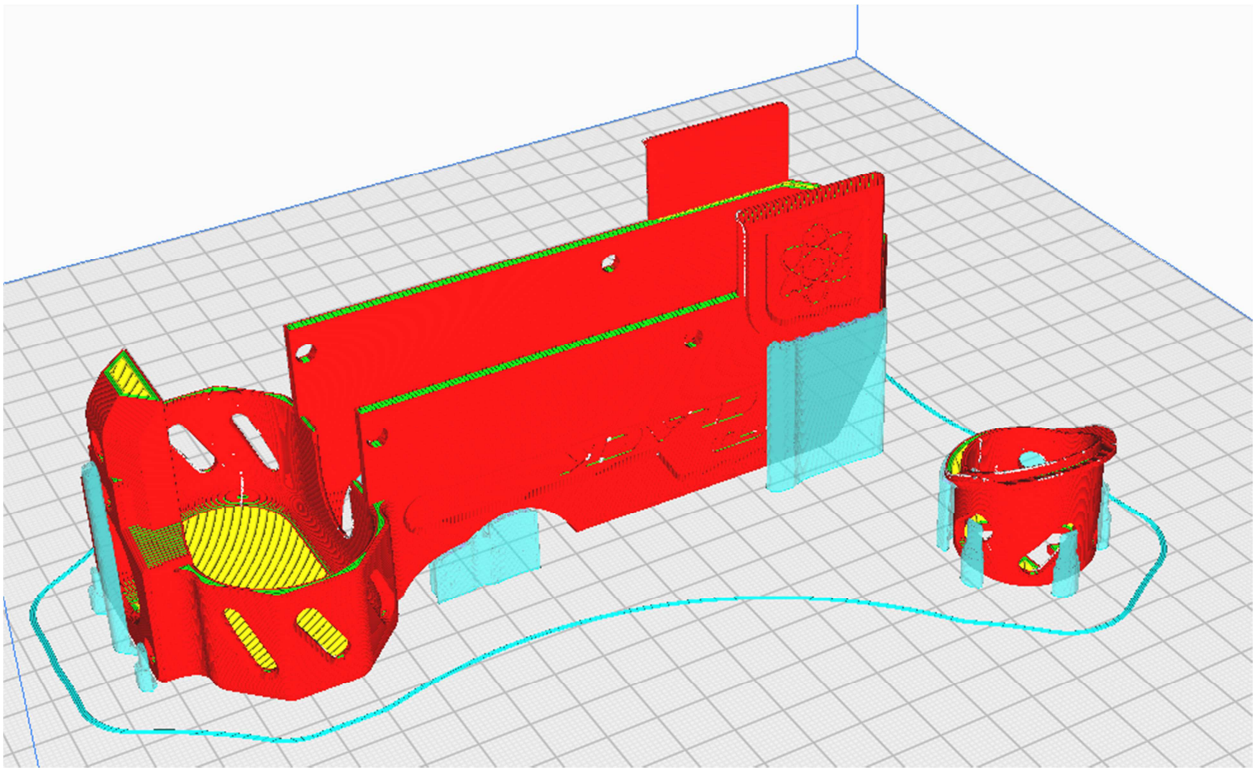

SUPPORTS - EVERYWHERE

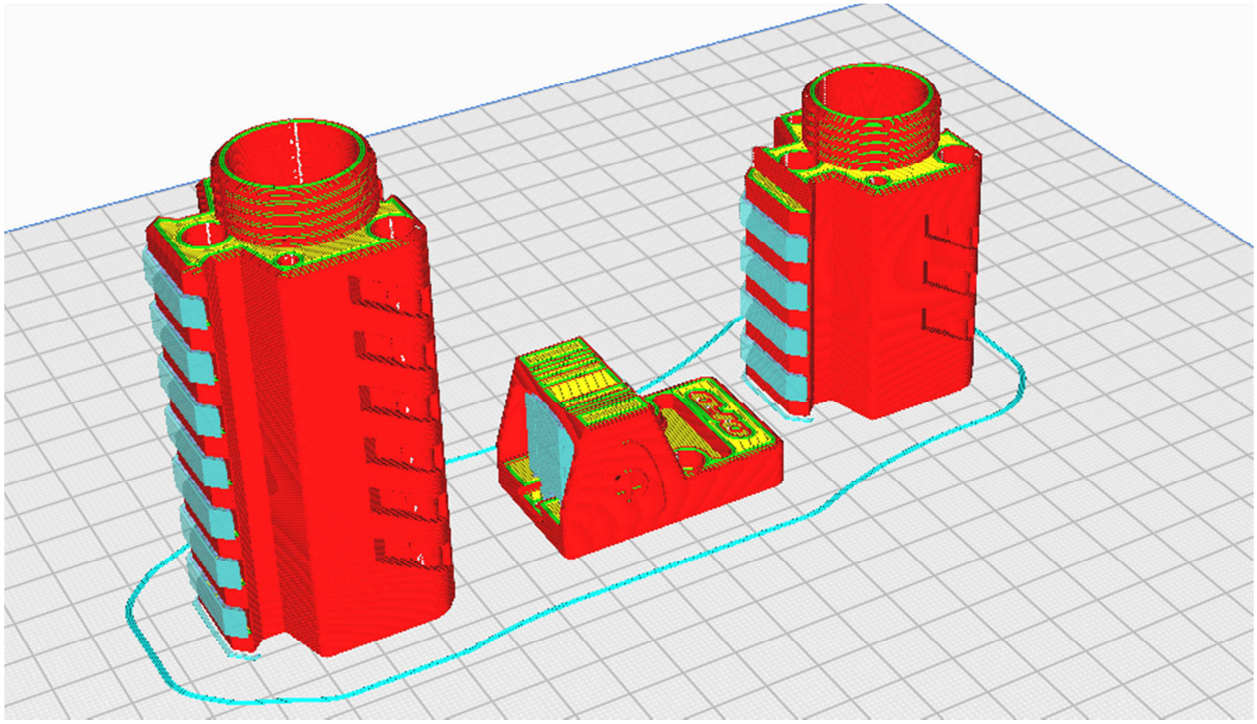

NO SUPPORTS

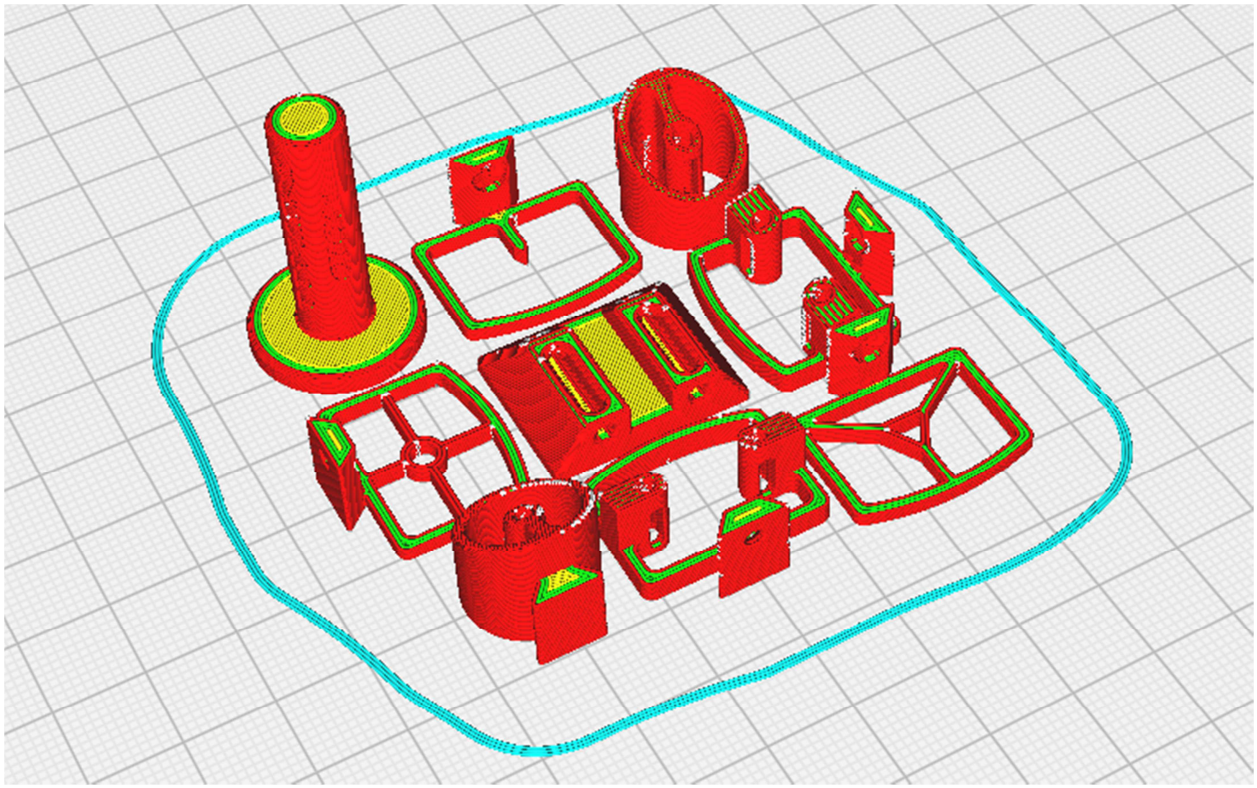

WIRING GUIDELINES

- Solenoid does not have specific polarity – this is user defined, once you have chosen a polarity, mark the negative wire with a sharpie to remember!
- I always include a diode to mitigate flyback – the one I use is 1N4001 – readily available on amazon. Solder this diode between the pos/negative leaves you have determined, and heat shrink well!
- Grey stripe MUST go towards positive (+) lead
- Double check your solenoid pusher nut is tight/loctited just in case!

OFD ANOID MEOWSER WIRING

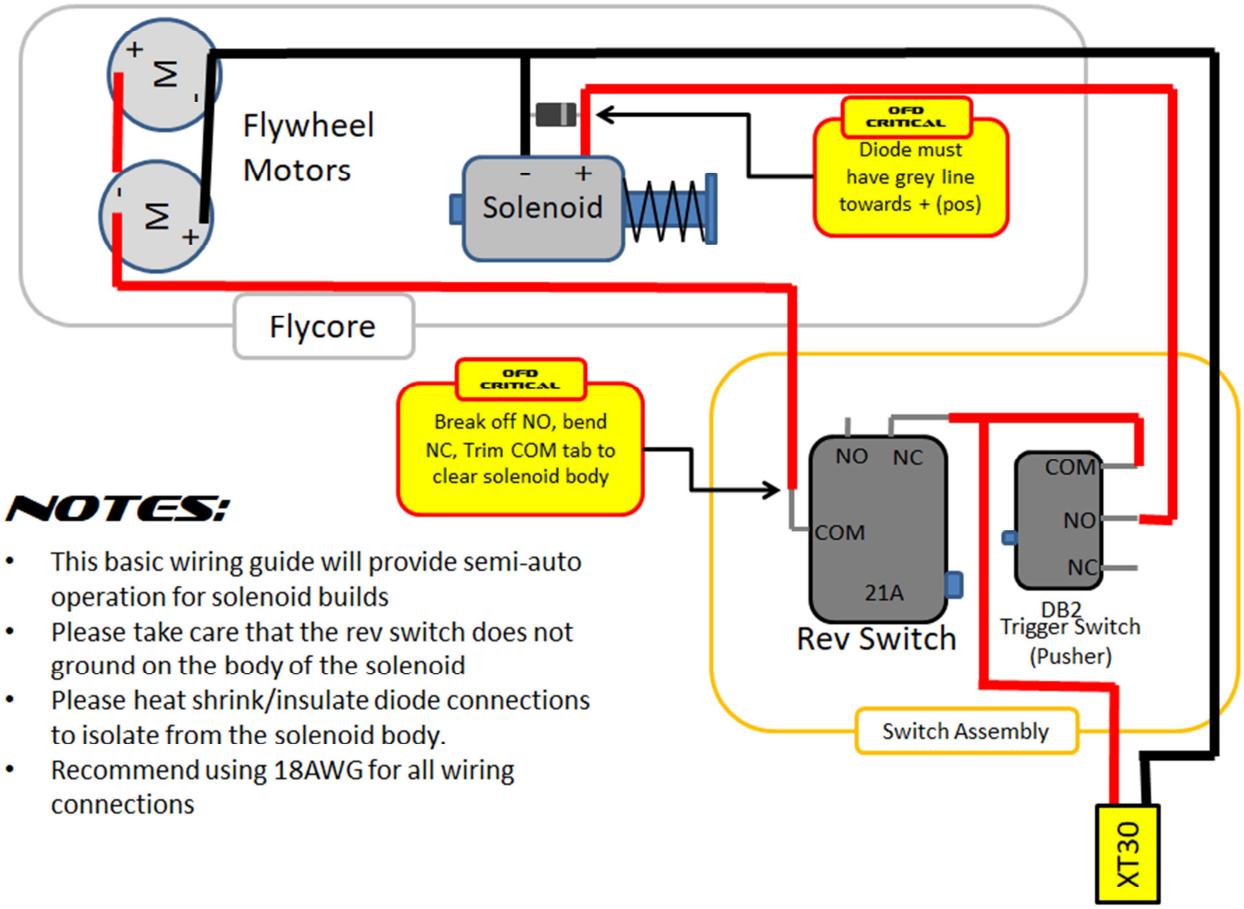

NOTES:

- This basic wiring guide will provide semi-auto operation for solenoid builds
- Please take care that the rev switch does not ground on the body of the solenoid
- Please heat shrink/insulate diode connections to isolate from the solenoid body.
- Recommend using 18AWG for all wiring connections

WIRING REFERENCE

Solenoid Wiring/diode placement: I recommend soldering the diode closer to the solenoid, thoroughly heat shrinking/taping and taping/gluing to the side of the solenoid for ease of installation

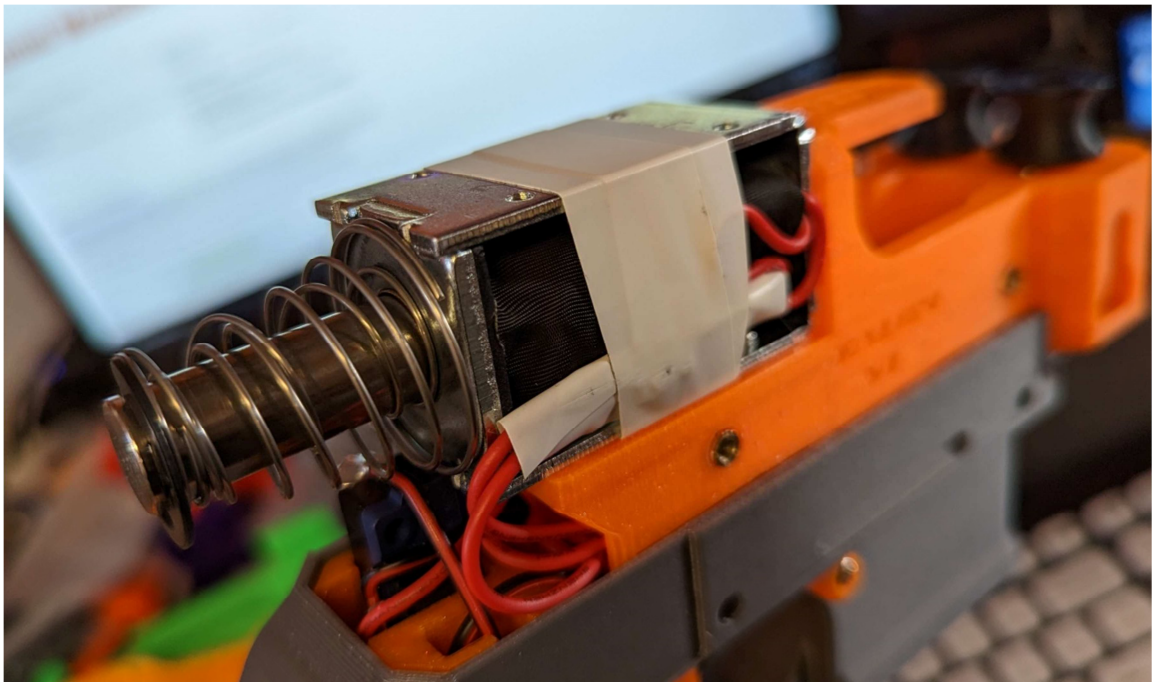

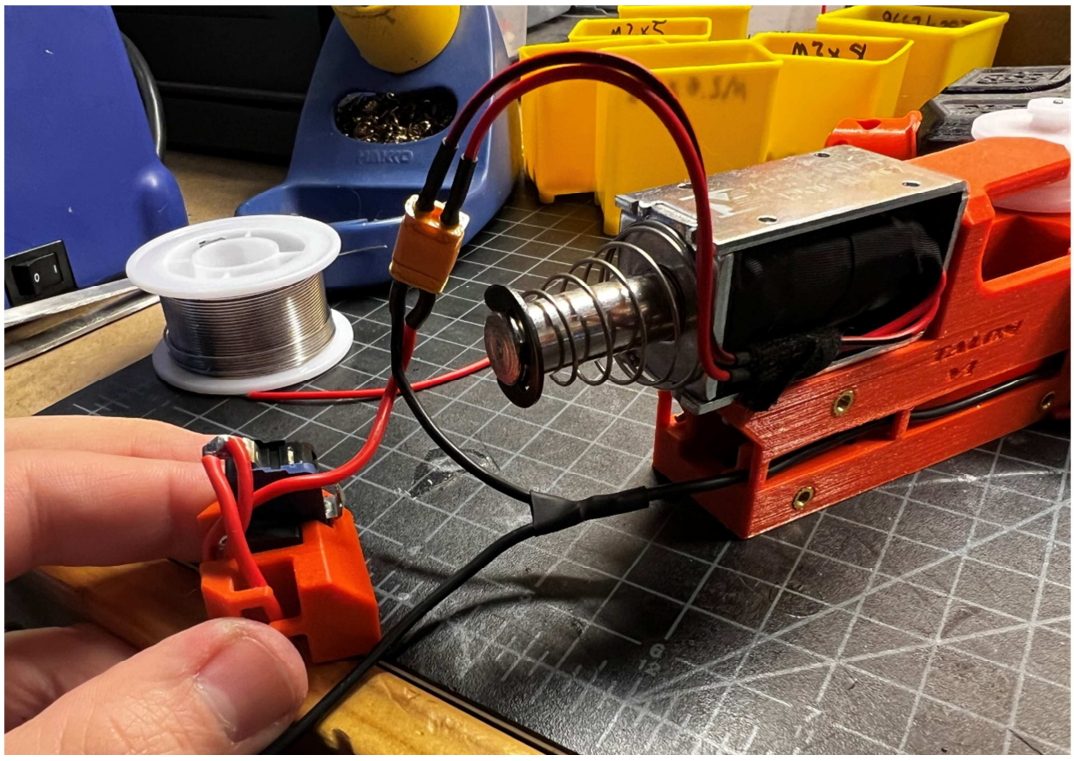

Switch clearance/routing: The switch assembly is very tight on Meowser – please take **SPECIAL ATTENTION** to the rev switch's proximity to the solenoid mounting screws and rear spring – make sure these **DO NOT CONTACT THE SOLENOID UNDER ANY CIRCUMSTANCE**.

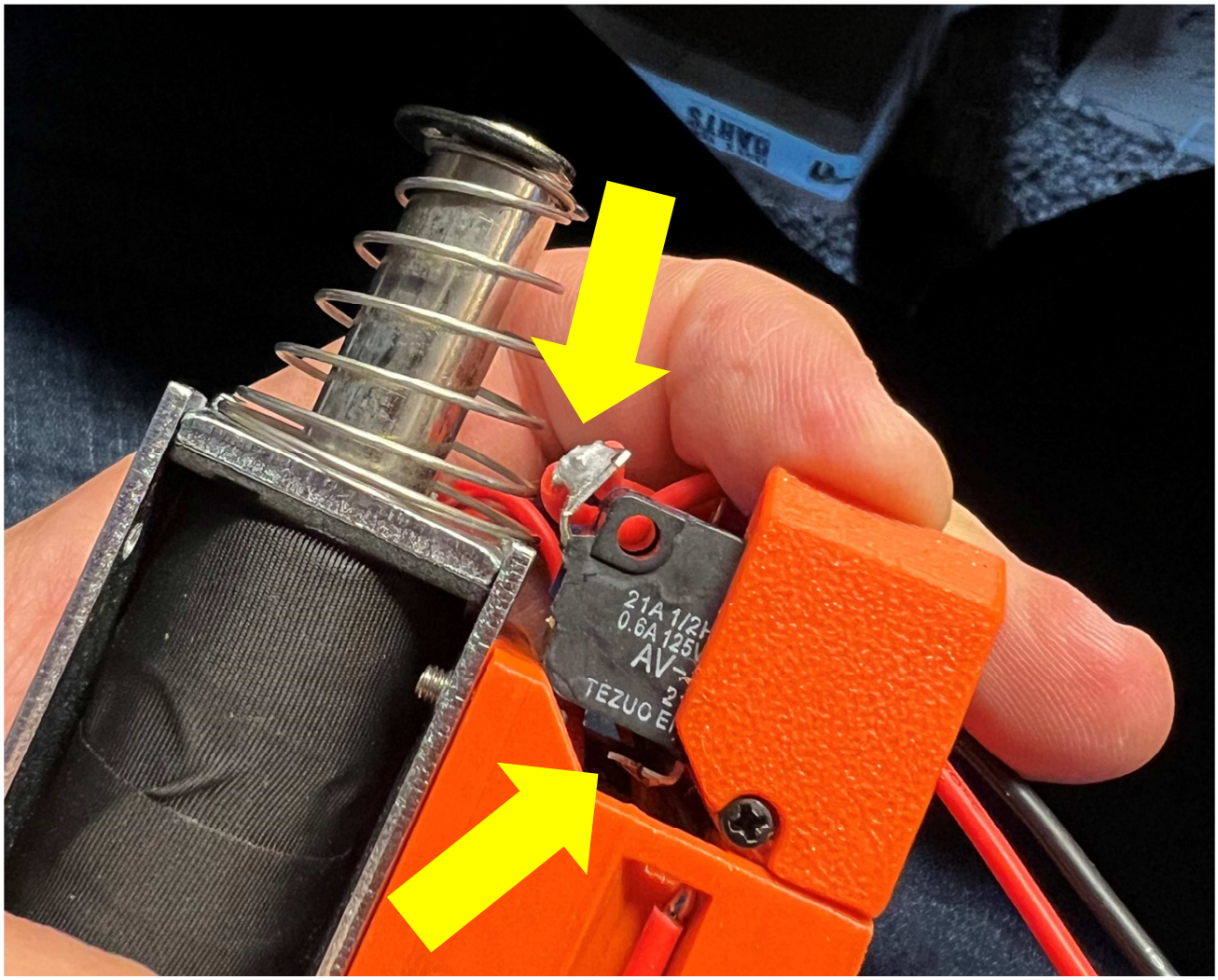

ASSEMBLY

RMR Assembly

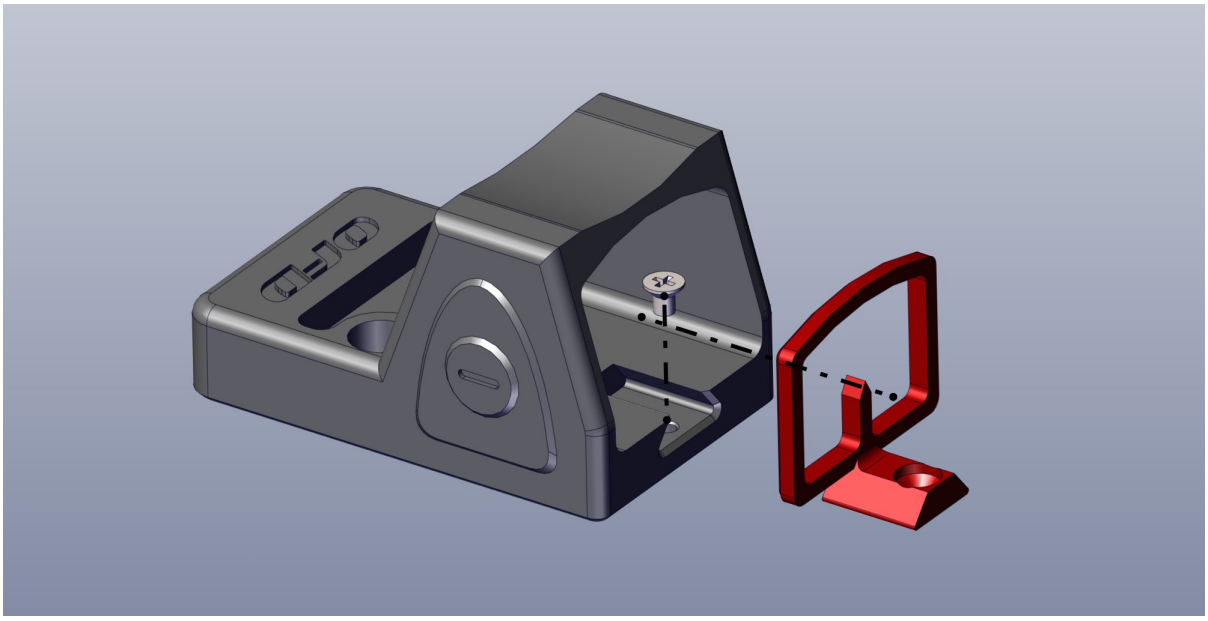

Upper Assembly: Install RMR w/M3x8 being **<u>CAREFUL</u>** not to over-torque – can install M2x5 from bottom from additional support! Glue back cap onto upper as shown w/ adhesive of choice (I recommend basic CA/Superglue).

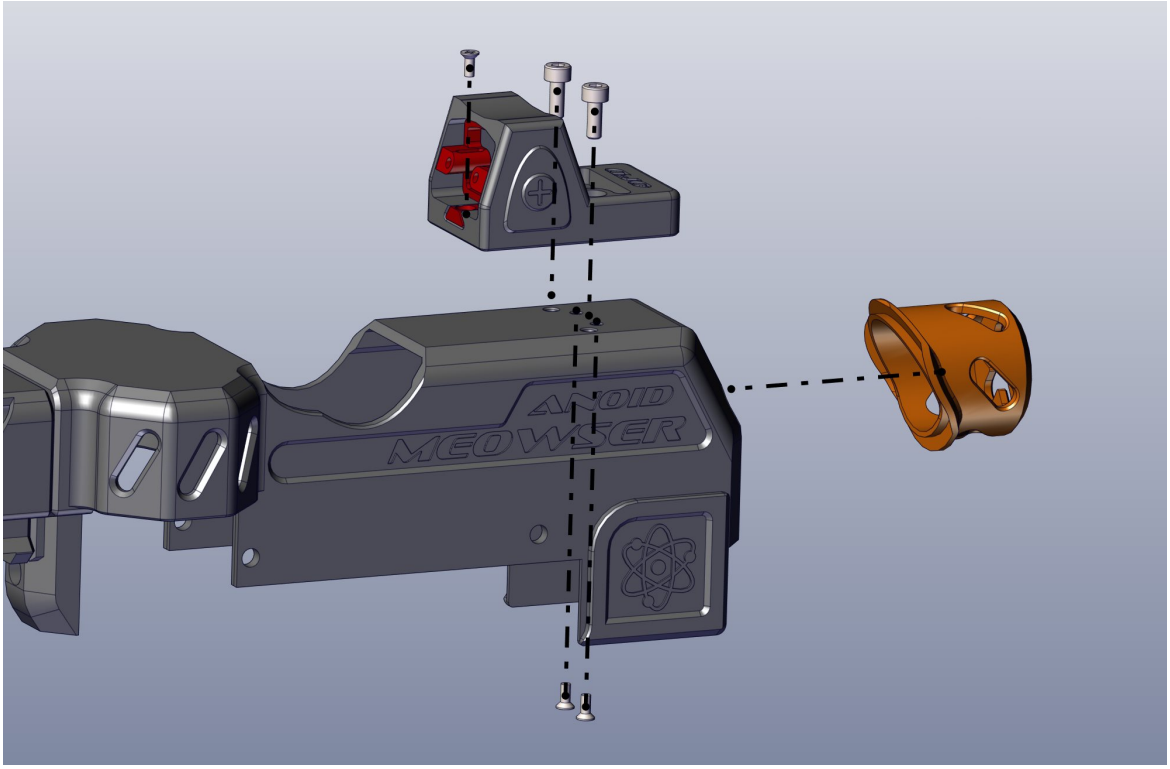

Upper installation: depress solenoid with finger if needed, slip upper over core which is installed in Meowser frame.
Upper removal: Use solenoid installation tool to depress solenoid and remove upper.

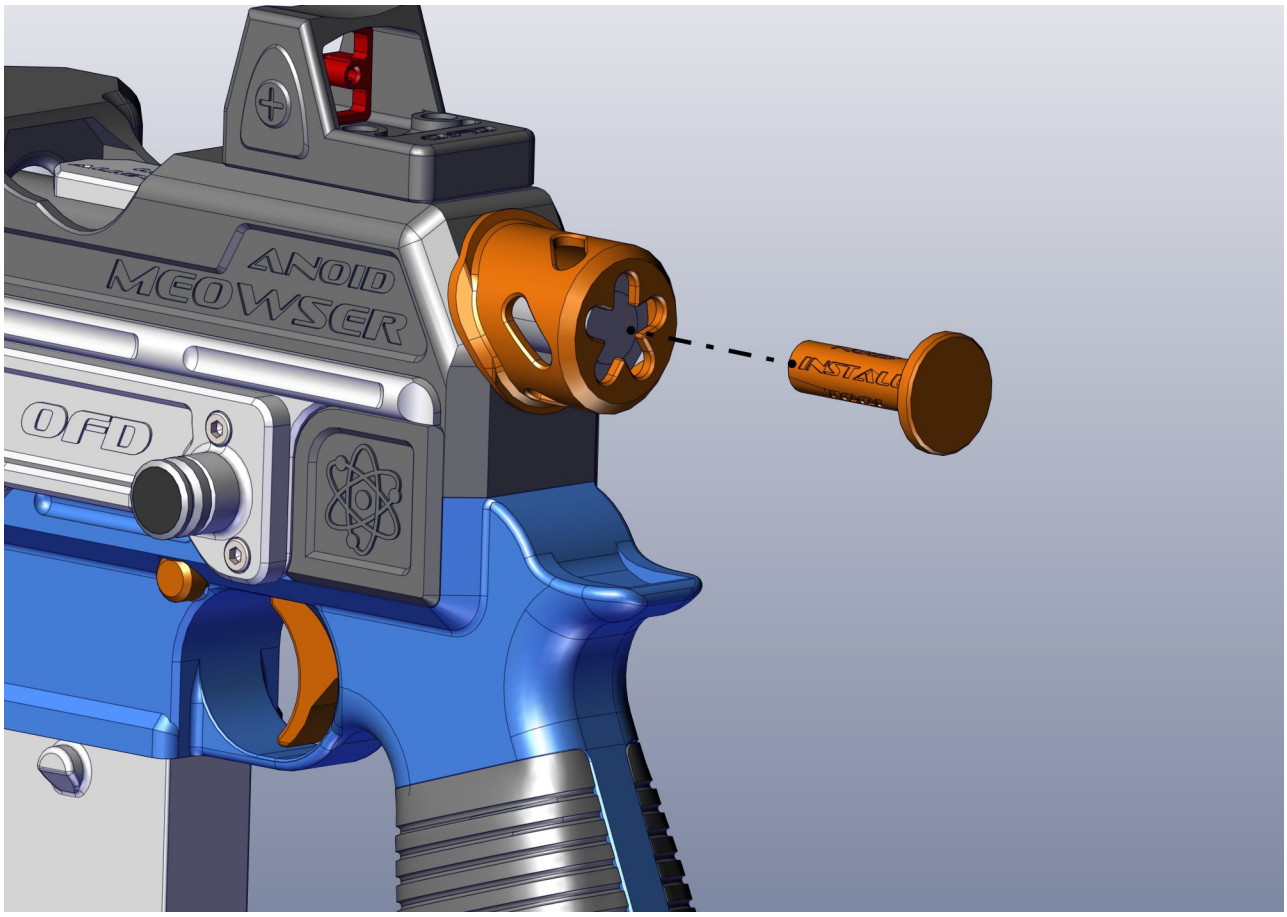

Rest of the blaster assembles like normal!

Final Step: Admire ☺

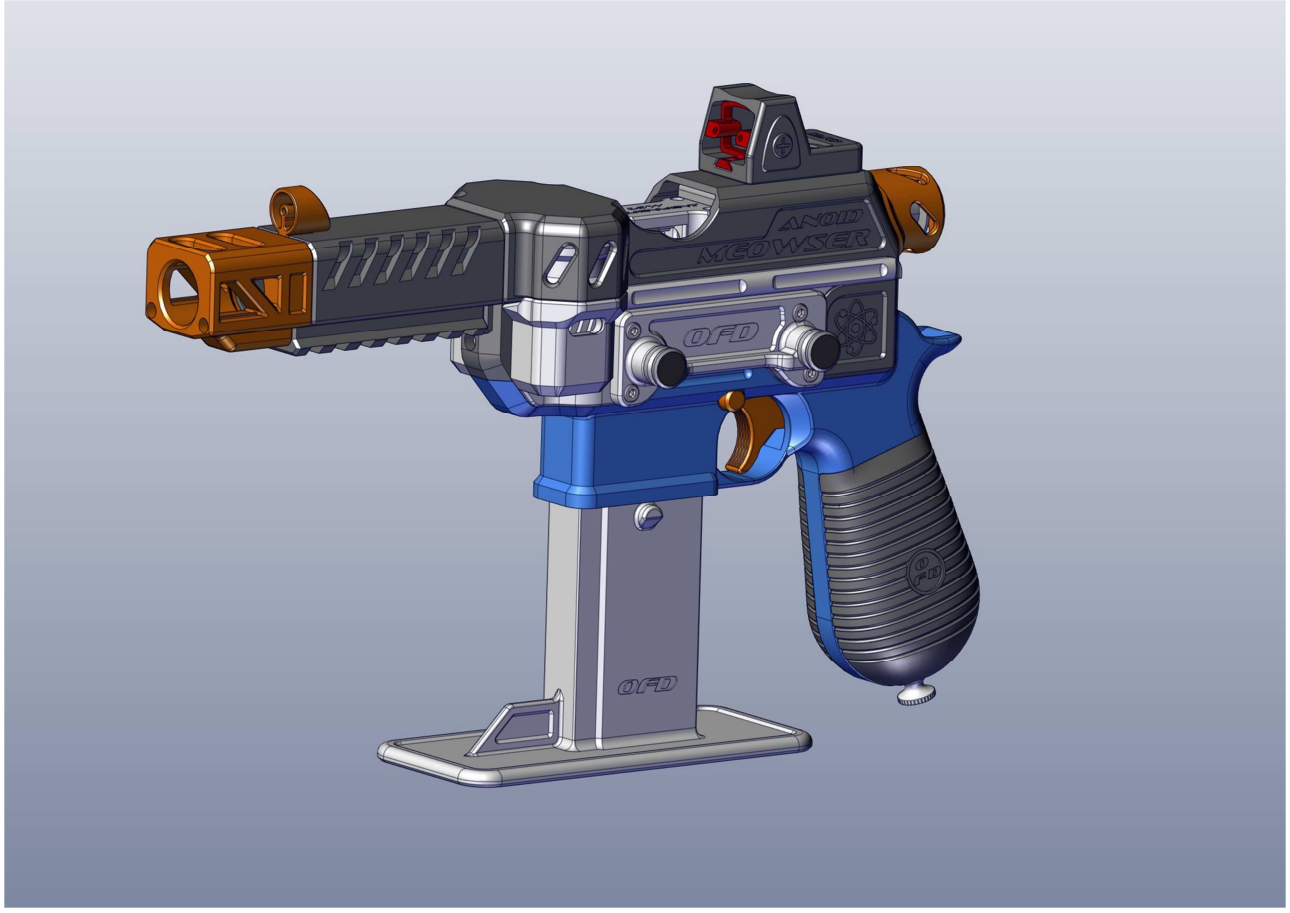

FAQ

- My solenoid isn't firing! Or it's behaving oddly!
  a) Check the wiring diagram – please make sure you didn't reverse polarity on the diode!
- My solenoid just shot it's pusher off at 200fps on my banned blasters setup!
  a) You forgot to tighten the pusher nub nut like I told you to dingus! Go find it and Loctite it this time!
- I have more questions, or my questions aren't listed here!
  a) No worries! Feel free to reach out to me on Etsy, or my discord: ag04#6231