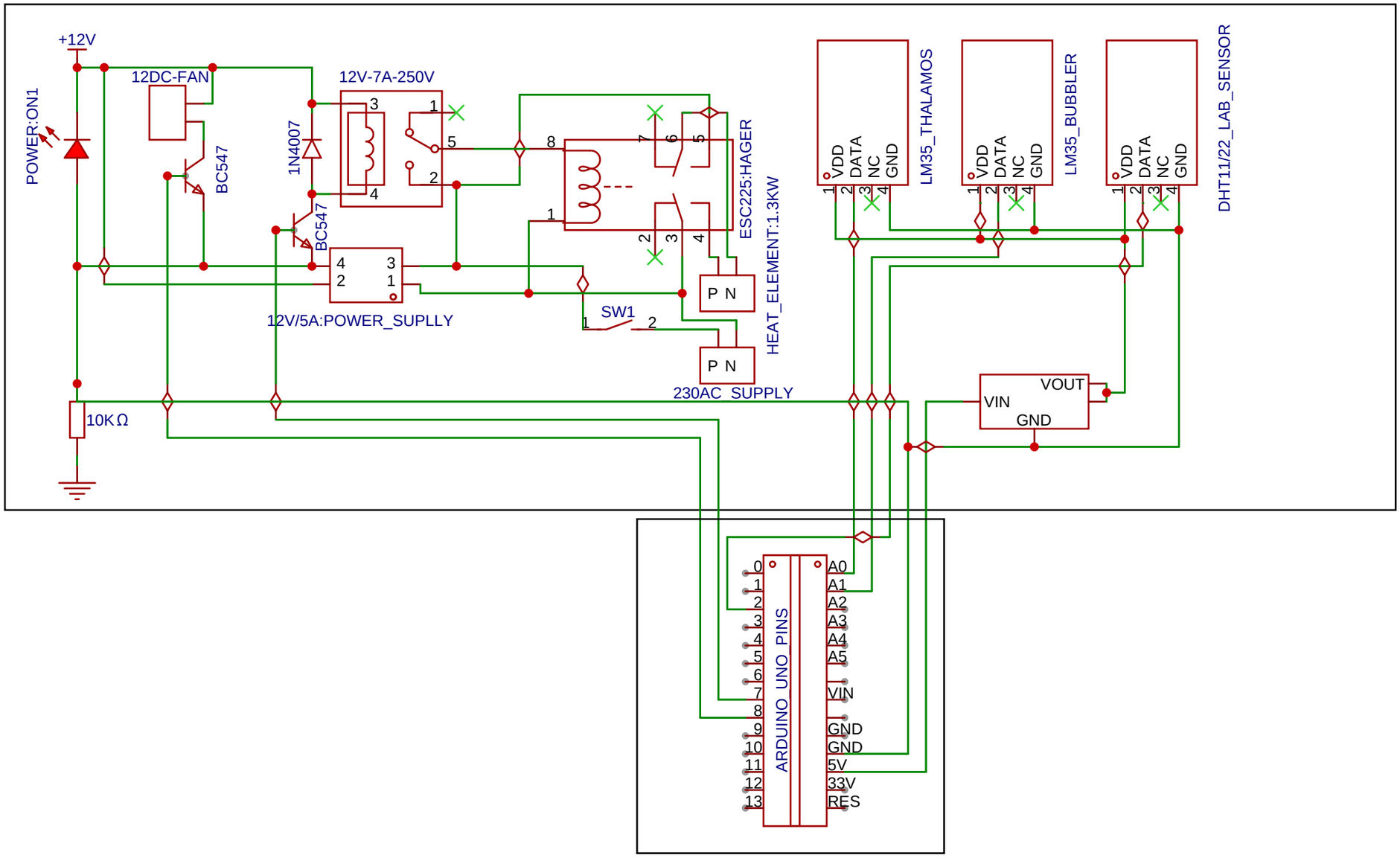

Schematic	ECB_comp_controler	Update Date	
		Create Date	2023-07-14
Page		Part Number	
Drawed			
Reviewed			
		VER	SIZE	PAGE	OF

EasyEDA