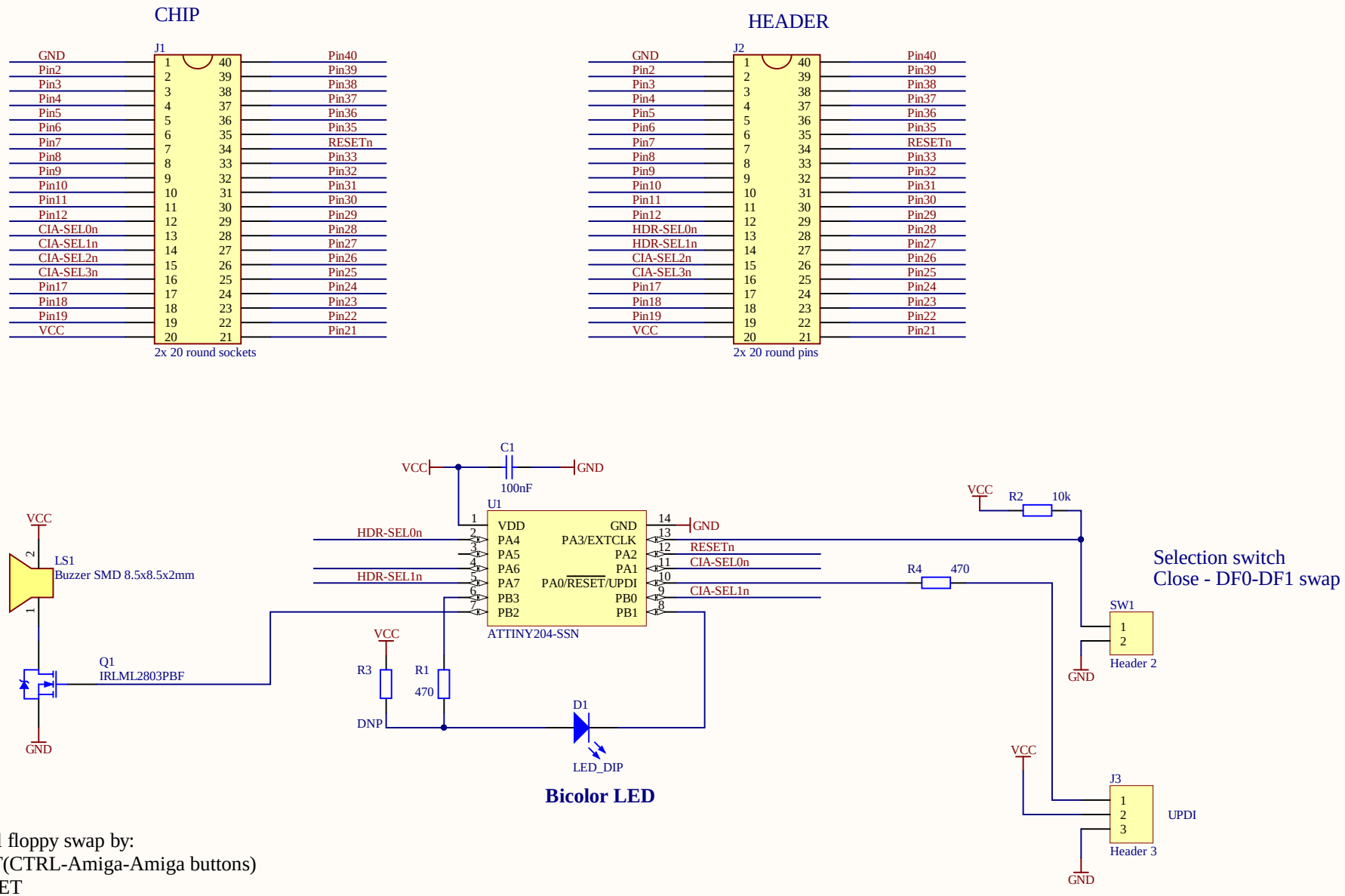


Internal-external floppy swap by:
- 3 times RESET(CTRL-Amiga-Amiga buttons)
- 5 seconds RESET
- Switch SW1

The switch overrides RESETs

| | | | |
|---|---|---|---|
| Title | ***BootSelector*** | | |
| Size: A4 | Number: 1 | Revision: 3.0 | |
| Date: 08.06.2023 | Time: 15:00:56 | Sheet 1 of 1 | |
| File: main.SchDoc | | | |

*OLM*
*
*
*
*

open source hardware

OLM