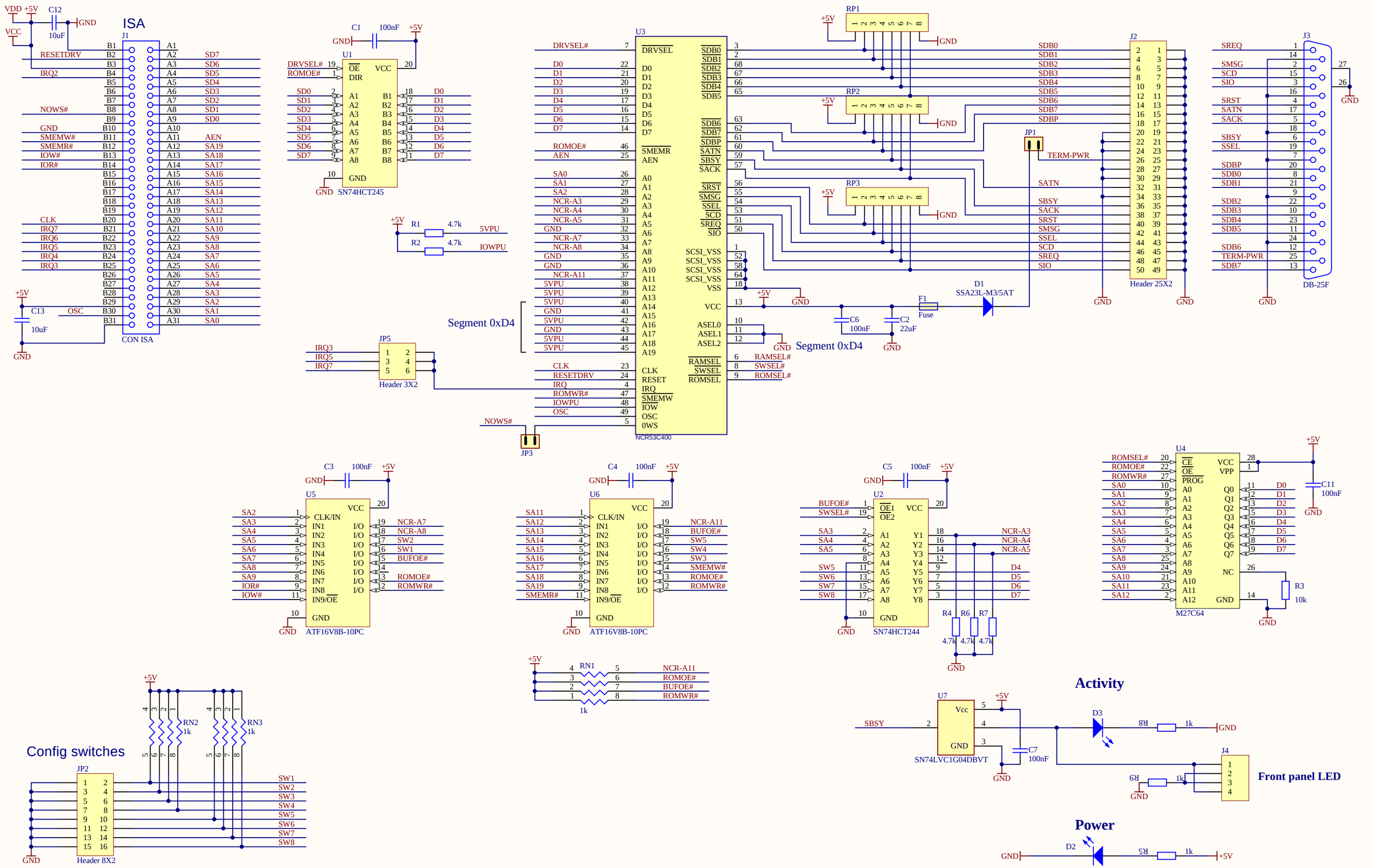

Bracket: Keystone 9200-4

Title	*SCSI-OLM-400* Trantor T128 clone		OLM
Size: A3	Number: 1	Revision: 2.0	
Date: 01.04.2023	Time: 13:30:06	Sheet 1 of 1	
File: main.SchDoc			