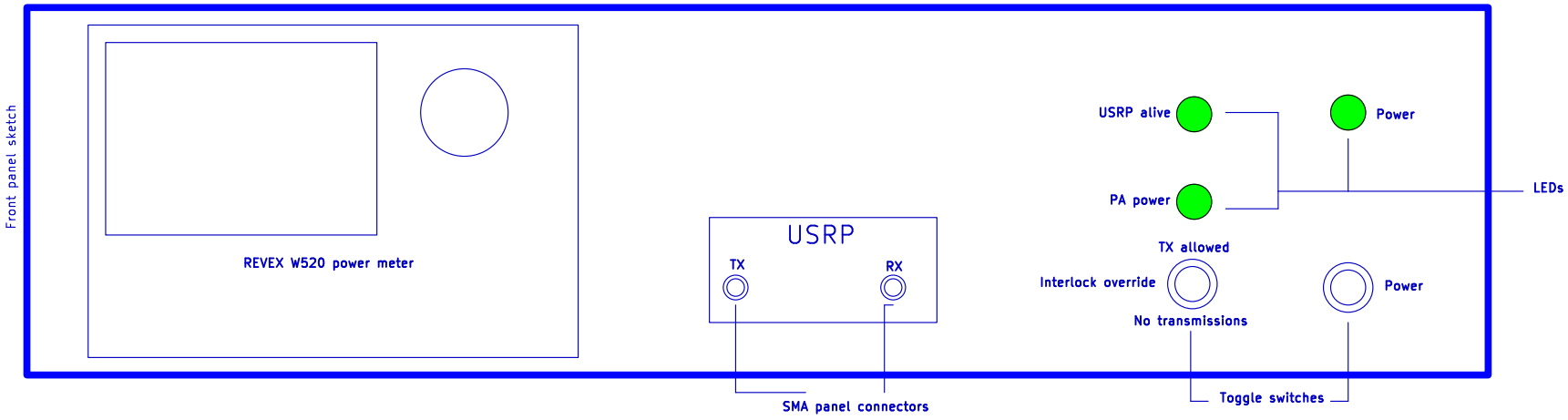

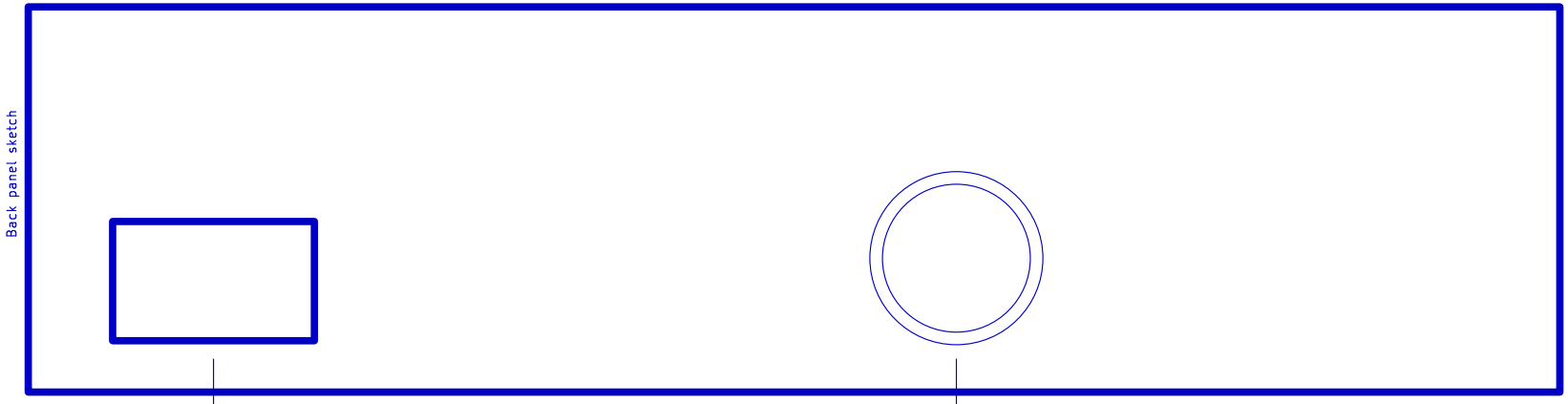

Electronics

File: electronics.kicad_sch

Mikko Syrjäsuo
Kjell Henriksen Observatory
University Centre in Svalbard

Sheet: /
File: UNIS-Ionosonde.kicad_sch

Title: Ionosonde

Size: A4	Date:	**Rev:**
KiCad E.D.A. 9.0.7		Id: 1/2

Power supply

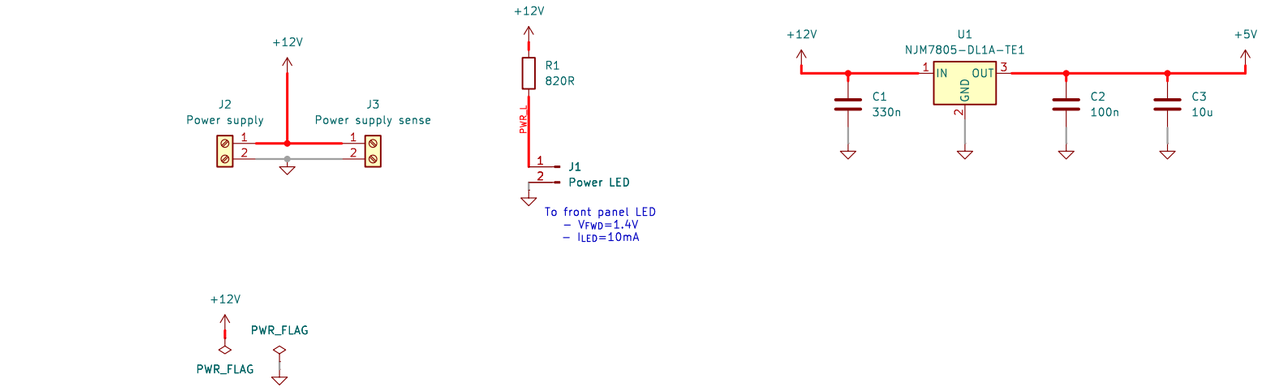

Remote monitoring interface

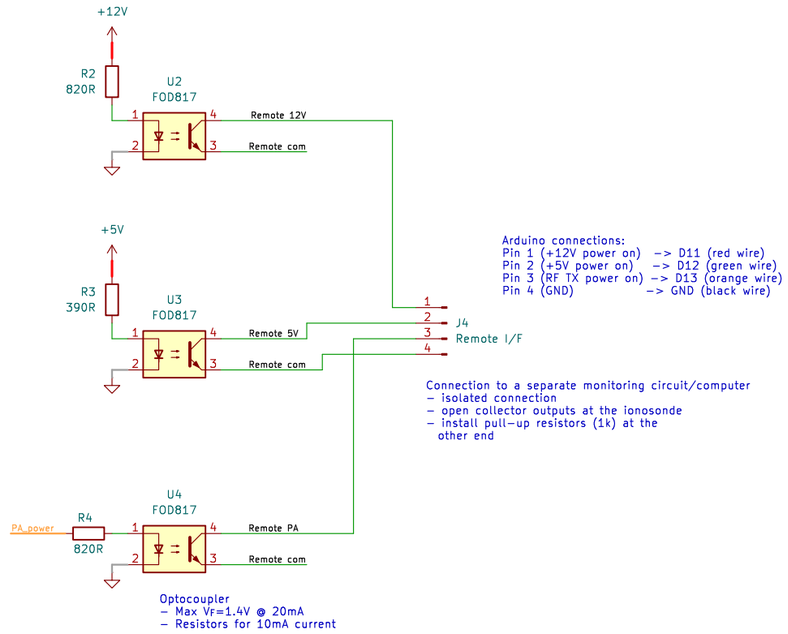

USRP watchdog with PA power and RF switch control

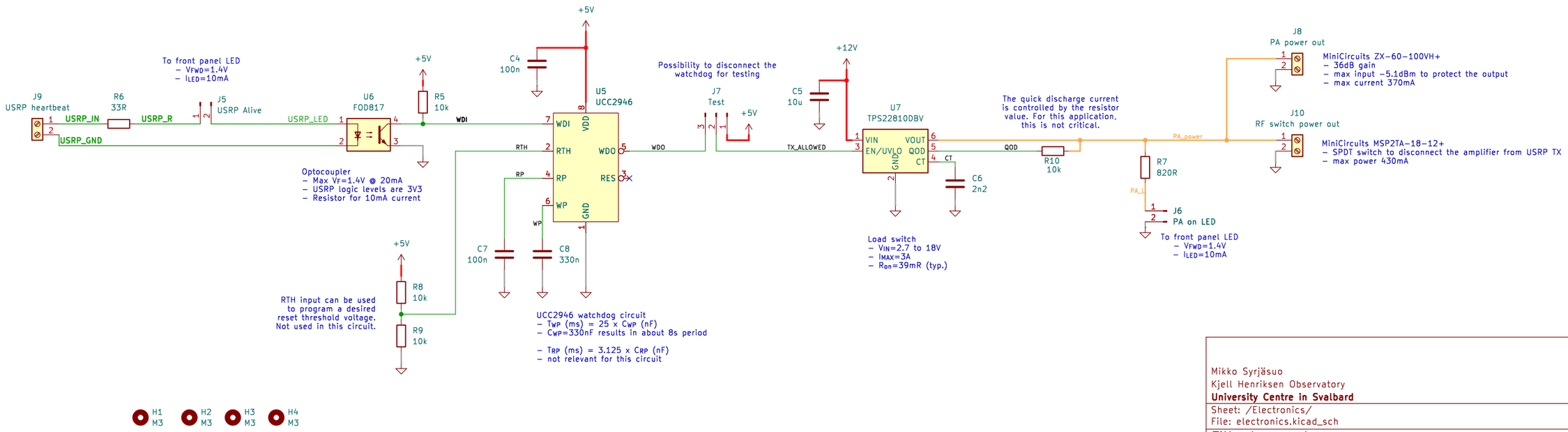

H1 M3 H2 M3 H3 M3 H4 M3

Mikko Syrjäsuo
Kjell Henriksen Observatory
University Centre in Svalbard

Sheet: /Electronics/
File: electronics.kicad_sch

Title: Ionosonde

Size: A3	Date:	Rev:
KiCad E.D.A. 9.0.7		Id: 2/2