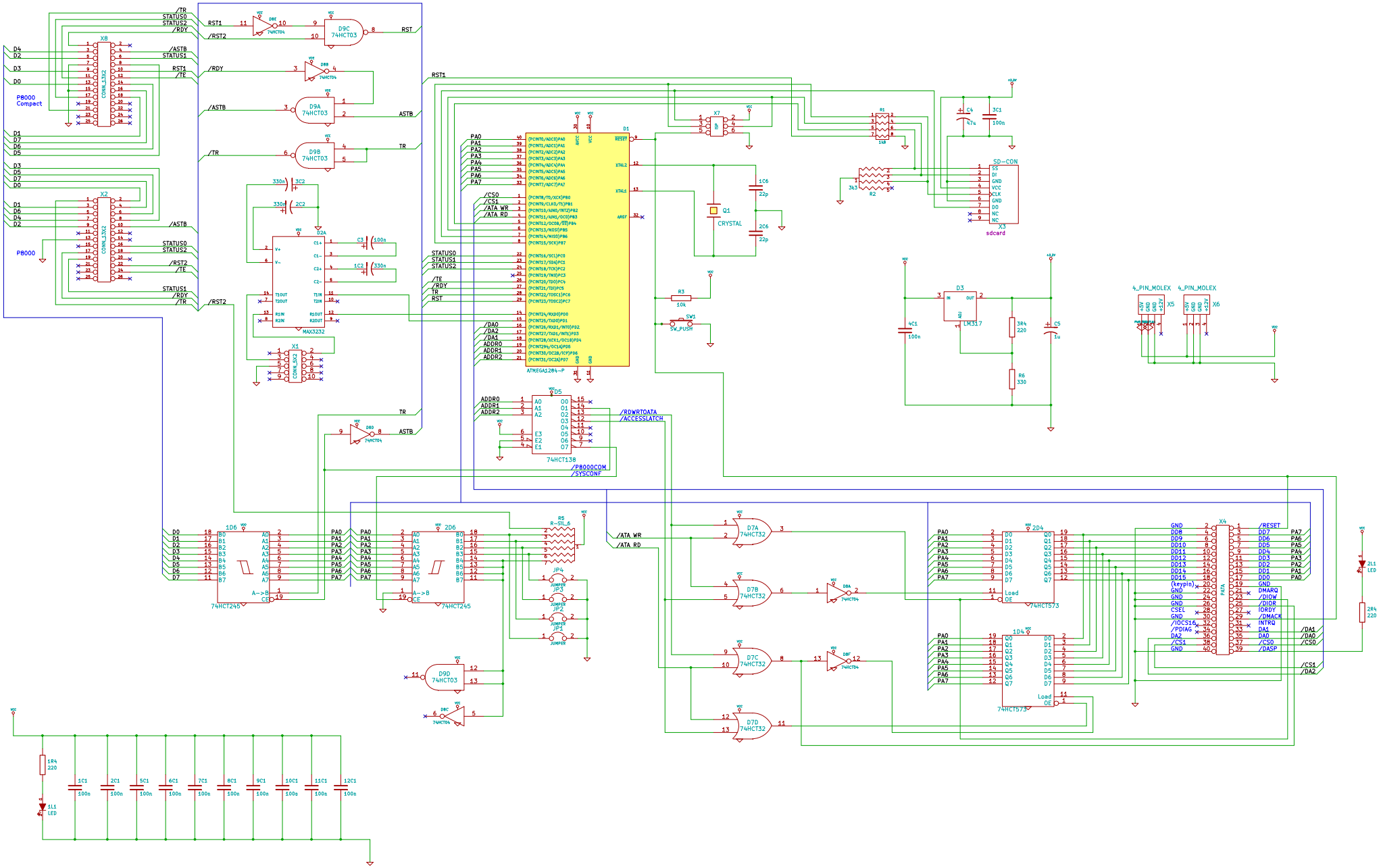

File: PB000_WDC_Emulator.sch	
Sheet: /	
Title: PB000 WDC Emulator v1.1	
Size: A2	Date: 14 jul 2013
KICad E.D.A. eeschema (2012-01-19 BZR 3256)-stable	Id: 1/1