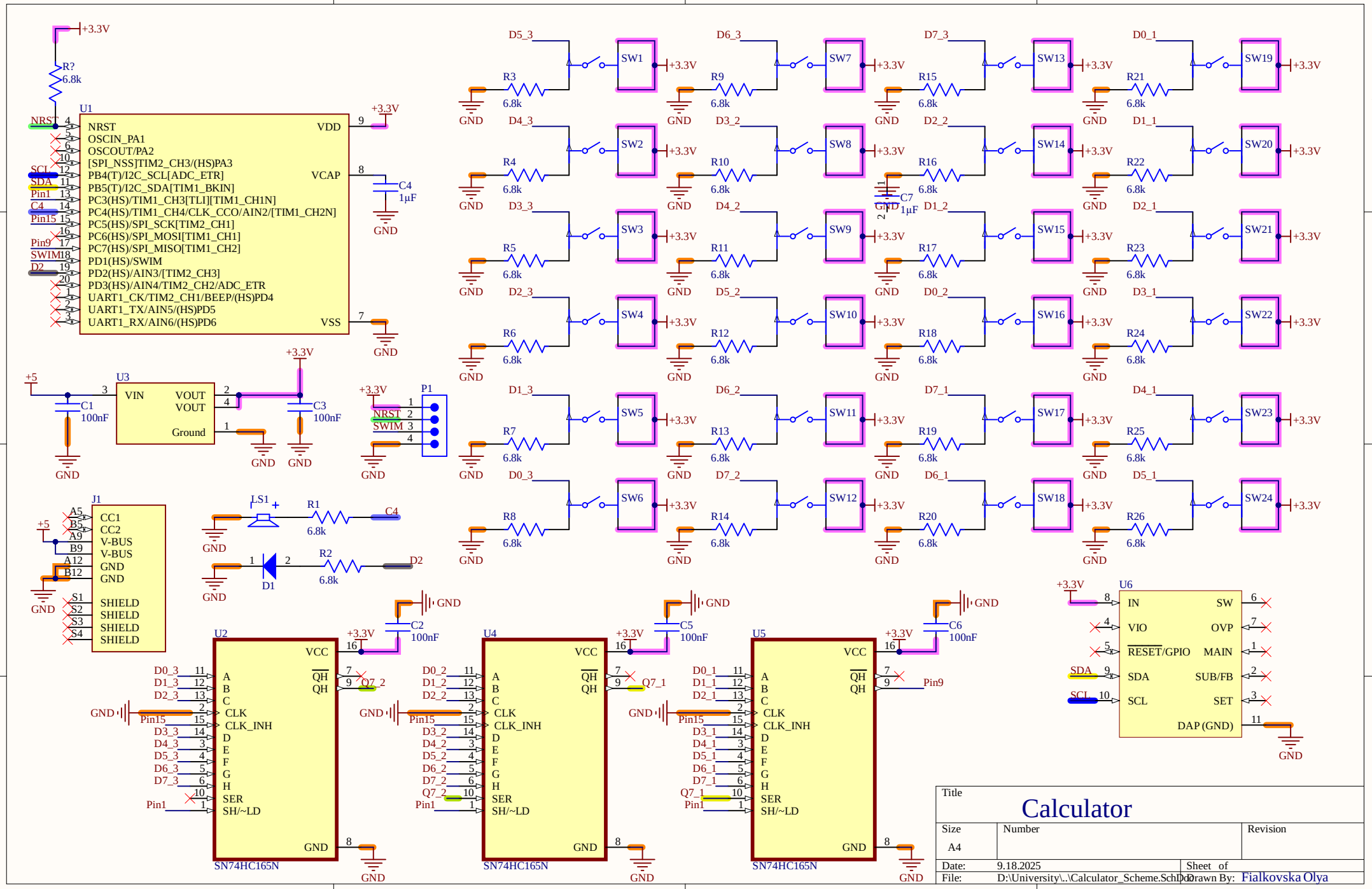

Title	Calculator	
Size A4	Number	Revision
Date: 9.18.2025	Sheet of	
File: D:\University\..\Calculator_Scheme.SchDoc	Drawn By: Fialkovska Olya	