GLADİATOR

TOPICS OVERVIEW

1. INTRODUCTION

- BACKGROUND OF RALLYE ROBOTICS COMPETITIONS
- OBJECTIVES OF THE BLUETOOTH-CONTROLLED CAR PROJECT
- SIGNIFICANCE OF THE PROJECT IN ROBOTICS

2. PROJECT OVERVIEW

- HARDWARE COMPONENTS: MOTORS, LEDS, CHASSIS, BLUETOOTH MODULE, ARDUINO MICROCONTROLLER
- SOFTWARE ARCHITECTURE: ARDUINO CODEBASE, BLUETOOTH COMMUNICATION, MOTOR CONTROL ALGORITHMS
- SYSTEM BLOCK DIAGRAM ILLUSTRATION

3. DESIGN AND IMPLEMENTATION

- CHASSIS AND MECHANICAL DESIGN: STABILITY, MANEUVERABILITY, WEIGHT DISTRIBUTION
- MOTOR CONTROL SYSTEM: HIGH-TORQUE MOTORS, MOTOR DRIVERS, CONTROL ALGORITHMS
- BLUETOOTH COMMUNICATION: WIRELESS LINK, COMMUNICATION PROTOCOL
- CODE IMPLEMENTATION: MODULAR ARDUINO CODEBASE

4. TESTING AND VALIDATION

- TEST SCENARIOS: SPEED TRIALS, PRECISION TESTS, OBSTACLE NAVIGATION
- RESULTS AND OBSERVATIONS: QUANTITATIVE AND QUALITATIVE ASSESSMENT
- TESTING AREA

5. SAFETY FEATURES

- EMERGENCY STOP FUNCTIONALITY

6. POWER MANAGEMENT

- POWER REQUIREMENTS: VOLTAGE, CURRENT, POWER SOURCES

7. ELECTRIC SCHEMA

8. 3D CONCEPTION

9. COMPETITION PREPARATION

- MODIFICATIONS FOR THE COMPETITION ENVIRONMENT

10. CONCLUSION

- SUMMARY OF KEY FINDINGS

INTRODUCTION :

1. INTRODUCTION :

In the dynamic landscape of robotics, the rallye robotics competition stands as a testament to innovation, efficiency, and precision in autonomous and remotely controlled robotic systems. This project introduces a Bluetooth-Controlled Car, meticulously crafted and optimized for participation in such competitions. The objective is to showcase a versatile and responsive robotic platform that combines advanced hardware components with sophisticated software control.

1.1 BACKGROUND:

Rallye robotics competitions challenge robots to navigate complex terrains and respond to diverse commands, fostering innovation in robotics.

1.2 OBJECTIVES OF THE BLUETOOTH-CONTROLLED CAR PROJECT

Develop a versatile robot for rallye robotics competitions, focusing on precise control, responsive Bluetooth communication, and safety features.

1.3 SIGNIFICANCE OF THE PROJECT IN ROBOTICS

Showcasing the integration of advanced hardware and intelligent software, the project contributes to adaptable and user-friendly robotic systems.

PROJECT OVERVIEW:

2. PROJECT OVERVIEW:

2.1 HARDWARE COMPONENTS

- Motors: High-torque for precise control and agility.
- LEDs: Visual indicators for real-time feedback.
- Chassis: Balanced for stability and maneuverability.
- Bluetooth Module: Enables wireless control.
- Arduino Microcontroller: Central processing unit for coordination.

2.2 SOFTWARE ARCHITECTURE

- Arduino Codebase: Modular and well-documented.
- Bluetooth Communication: Reliable and real-time responsiveness.
- Motor Control Algorithms: Ensure smooth transitions.

2.3 SYSTEM BLOCK DIAGRAM ILLUSTRATION

- Arduino Codebase: Modular and well-documented.
- Bluetooth Communication: Reliable and real-time responsiveness.
- Motor Control Algorithms: Ensure smooth transitions.

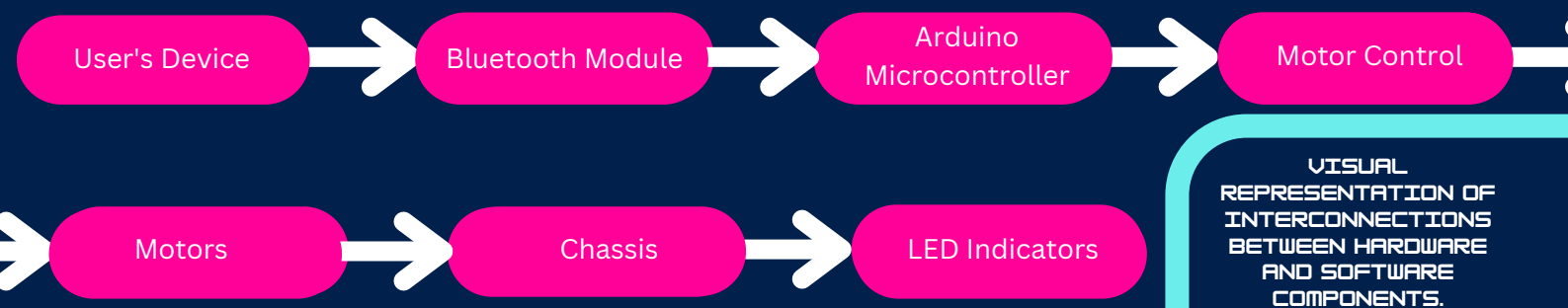

VISUAL REPRESENTATION OF INTERCONNECTIONS BETWEEN HARDWARE AND SOFTWARE COMPONENTS.

DESIGN AND IMPLEMENTATION

3. DESIGN AND IMPLEMENTATION

3.1 CHASSIS AND MECHANICAL DESIGN

- Stability: Balanced weight distribution.
- Maneuverability: Optimal wheel and motor placement.

3.2 MOTOR CONTROL SYSTEM

- High-Torque Motors: Provide necessary power.
- Control Algorithms: Ensure seamless transitions.

3.3 BLUETOOTH COMMUNICATION

- Wireless Link: Facilitates remote control.
- Communication Protocol: Optimized for reliability.

3.4 CODE IMPLEMENTATION

- Modular Arduino Codebase: Organized and documented.

SCAN ME!

FULL CODE AND SCHEMA HERE

TESTING AND VALIDATION

4. TESTING AND VALIDATION

4.1 TEST SCENARIOS

- Speed Trials: Assess swiftness and acceleration.
- Precision Tests: Evaluate accuracy in navigation.
- Obstacle Navigation: Simulate real-world scenarios.

4.2 RESULTS AND OBSERVATIONS

- Quantitative Assessment: Numerical data on speed, accuracy, and responsiveness.
- Qualitative Assessment: Capture nuances of behavior during testing.

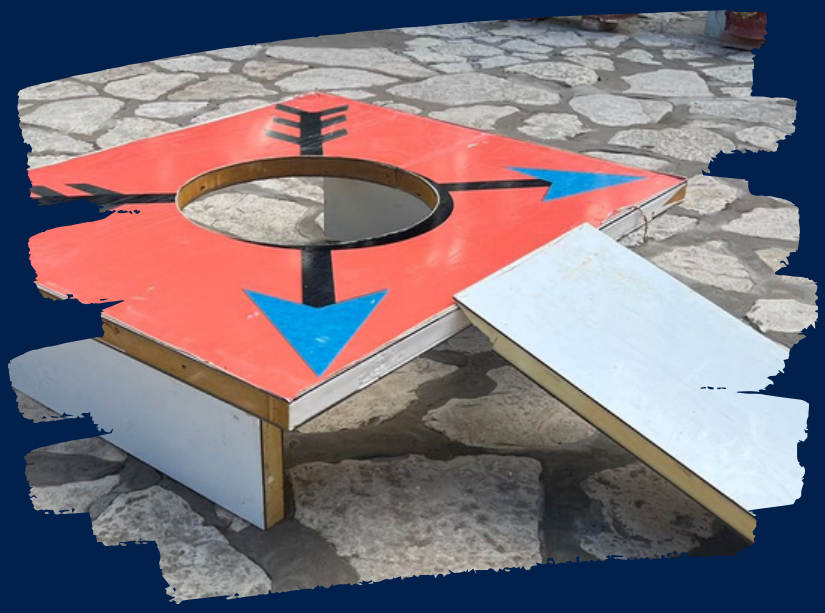

TESTING AREA

SAFETY FEATURES

5.1 EMERGENCY STOP FUNCTIONALITY

Halt all motor movements instantly, providing a reliable means for quick intervention in emergencies.

POWER MANAGEMENT

6. POWER MANAGEMENT

6.1 POWER REQUIREMENTS

- Carefully determined based on voltage and current specifications.
- Choice of power sources, like batteries, considers energy demands.

BATTERIE MODEL	VOLTAGE	CHARGING CAPACITY
PILE LI-ION RECHARGEABLE	3.7V	3800MAH
PILE NON RECHARGABLE	9V	/

ELECTRIC SCHEMA

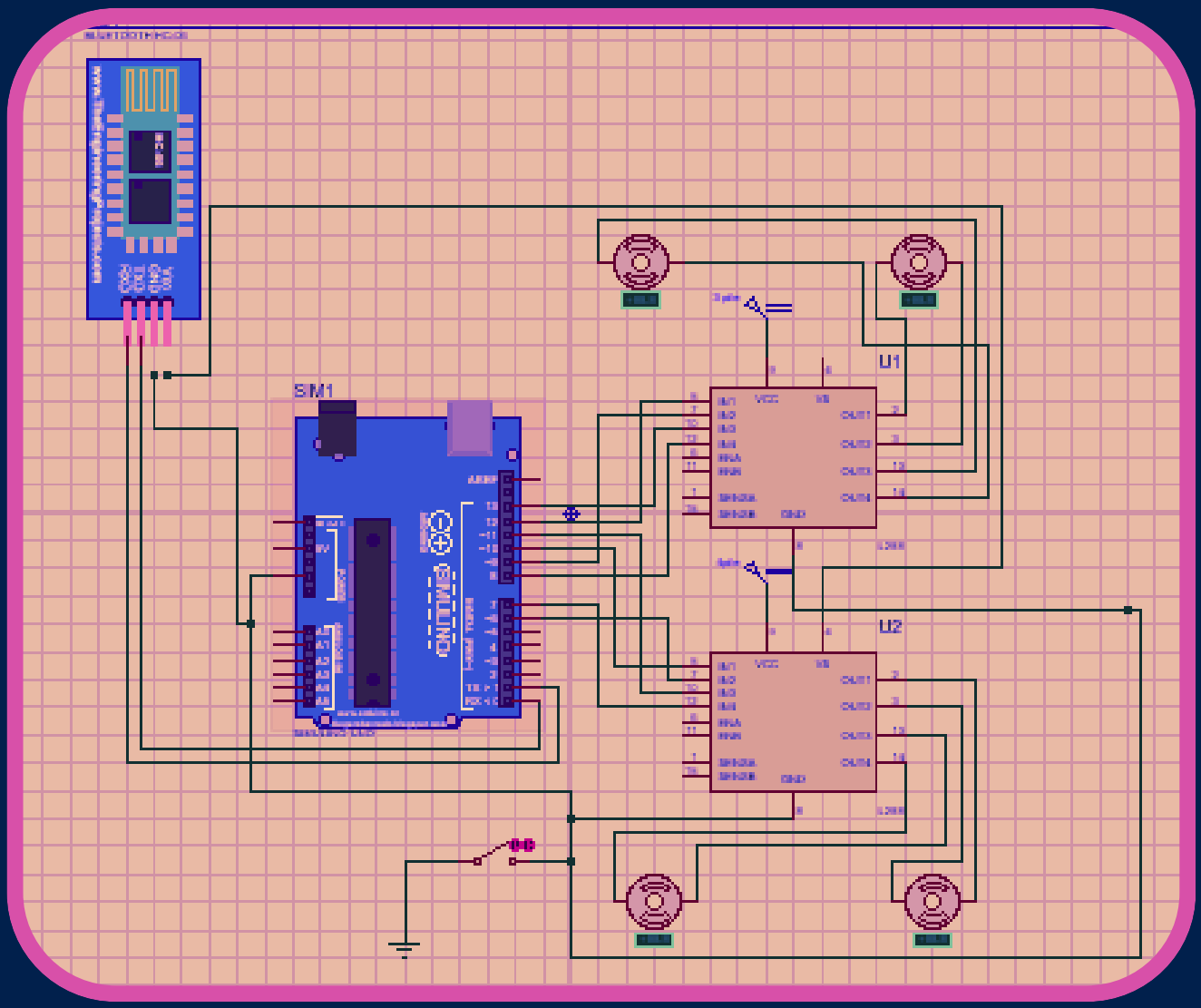

3D CONCEPTION

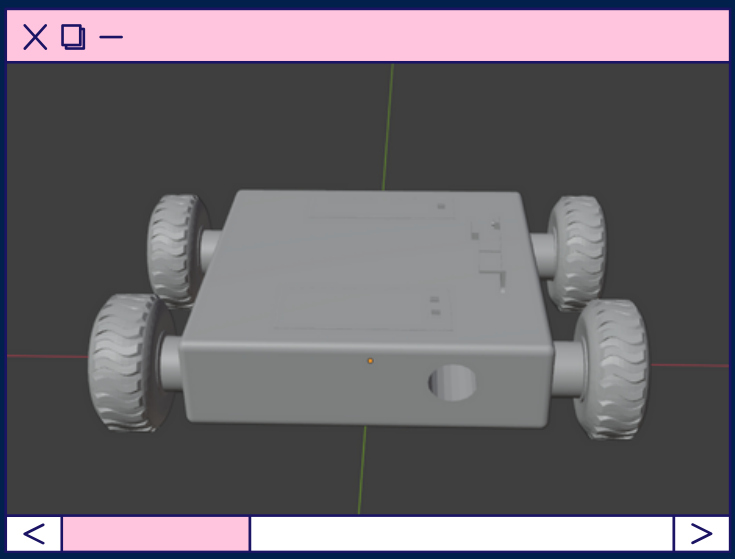

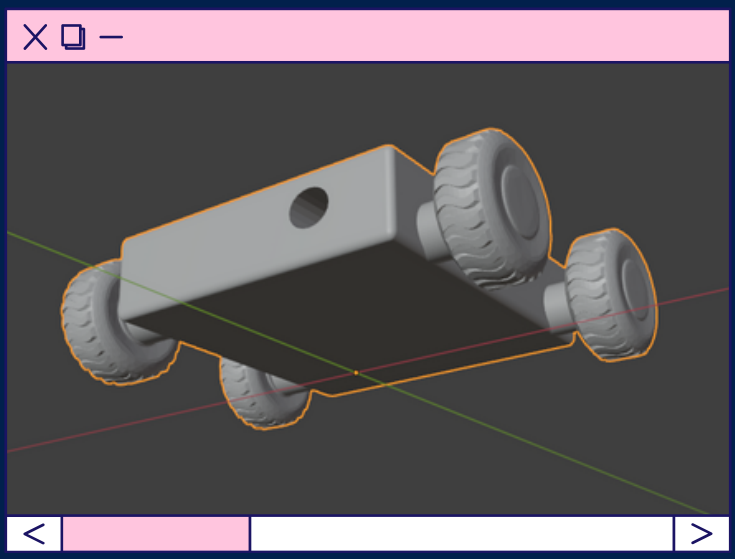

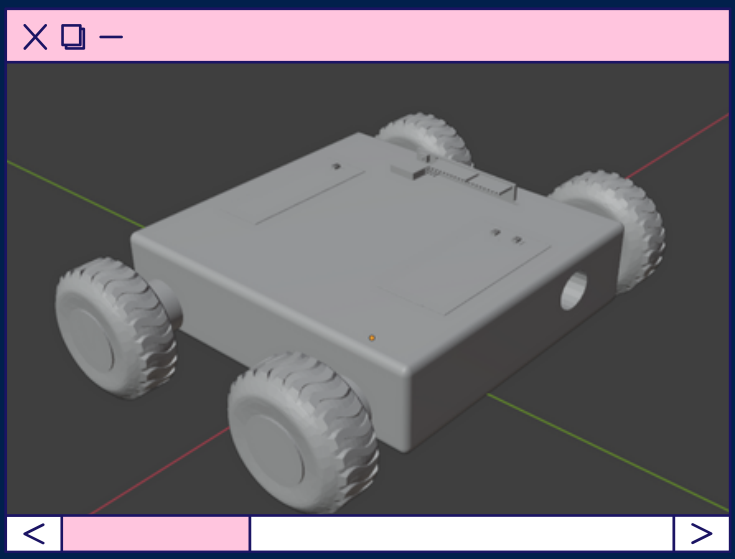

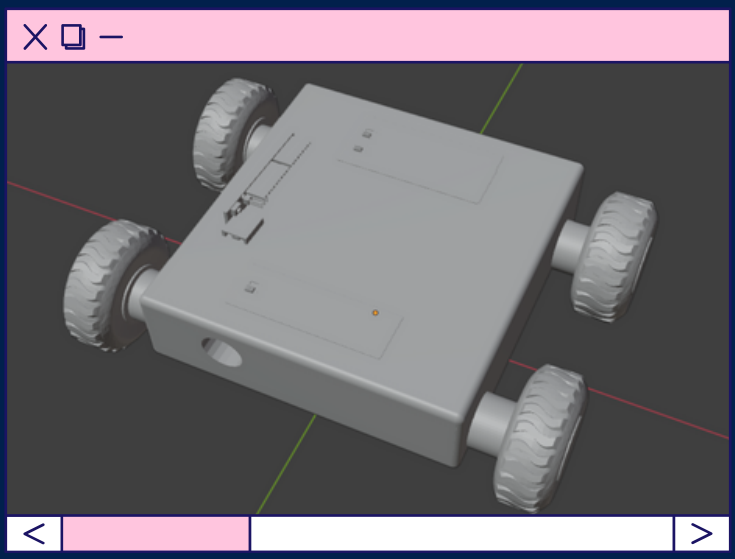

COMPETITION PREPARATION

9. COMPETITION PREPARATION

9.1 MODIFICATIONS FOR THE COMPETITION ENVIRONMENT

To enhance the Bluetooth-Controlled Car's performance in rallye robotics competitions, several modifications were implemented, focusing on optimizing traction, increasing power, and refining control mechanisms. These modifications aim to bolster the car's adaptability to off-road conditions and improve overall maneuverability.

A. Off-Road Tires:

- Objective: Improve Traction and Stability on Challenging Surfaces.
- Implementation: Replaced standard tires with off-road variants designed for enhanced grip and durability.
- Impact: Increased surface contact and improved traction on uneven terrains, contributing to better stability and control during off-road navigation.

B. Increased Power:

- Objective: Boost Motor Performance for Swift Movements.
- Implementation: Upgraded power delivery to motors, either through higher voltage batteries or enhanced current supply.
- Impact: Augmented motor performance, resulting in increased speed and responsiveness. The modification addresses the demand for swift movements, especially in scenarios requiring quick acceleration or deceleration.

C. Additional Motor Driver:

- Objective: Enhance Control Precision and Maneuverability.
- Implementation: Added a second motor driver to the existing setup, allowing independent control of each wheel.
- Impact: Improved control granularity, enabling precise adjustments to individual wheels. This enhancement is particularly valuable during complex maneuvers, turns, or when negotiating tight spaces, contributing to overall maneuverability.

These modifications were strategically chosen to address specific challenges encountered during testing and real-world scenarios in rallye robotics competitions. The off-road tires provide a tangible advantage on varied terrains, while increased power and an additional motor driver further refine the car's control, making it more adept at handling diverse challenges.

These enhancements align with the project's goal of creating a resilient and high-performance Bluetooth-Controlled Car capable of excelling in the dynamic and unpredictable conditions typical of rallye robotics competitions.

CONCLUSION

10. CONCLUSION

10.1 SUMMARY OF KEY FINDINGS

The Bluetooth-Controlled Car project has yielded significant insights and achievements, marking a notable contribution to the realm of robotics. The key findings underscore the performance, adaptability, and innovations embedded in the project.

A. Precision Control and Adaptability:

- The implementation of off-road tires, coupled with increased power and an additional motor driver, has substantially enhanced the car's precision control and adaptability in various terrains. It demonstrated superior traction, stability, and maneuverability, showcasing the efficacy of these modifications.

B. Improved Response and Swift Movements:

- The augmentation of power delivery to the motors resulted in a tangible improvement in the car's response time and speed. Swift movements, especially during acceleration and deceleration phases, were achieved, meeting the project's objective of creating a highly responsive robotic platform.

C. Enhanced Control Granularity:

- The incorporation of an additional motor driver significantly increased control granularity, allowing for precise adjustments to individual wheels. This improvement proved valuable in executing complex maneuvers, turns, and navigating tight spaces with unparalleled precision.

D. Adaptation to Off-Road Conditions:

- The utilization of off-road tires played a pivotal role in the car's adaptability to off-road conditions. The enhanced grip and durability of these tires ensured optimal performance on challenging surfaces, contributing to the overall success of the Bluetooth-Controlled Car in rallye robotics competitions.

E. Contributions to Robotics:

- The project serves as a testament to the potential advancements in robotic technology within the context of rallye robotics competitions. The integration of sophisticated hardware components, intelligent software systems, and strategic modifications demonstrates the project's significance in pushing the boundaries of robotics innovation.

In conclusion, the Bluetooth-Controlled Car project not only met its initial objectives but exceeded expectations in terms of performance, control, and adaptability. The project's findings contribute valuable insights to the broader field of robotics, paving the way for future advancements in the design and development of agile and responsive robotic platforms. The iterative nature of the project, with ongoing testing and refinement, ensures that the Bluetooth-Controlled Car remains at the forefront of innovation in rallye robotics.

PROJECT REALISERD BY

Name: Omar Bouajaja

Mail: OmarBouajaja48@gmail.com

phone: +216 26 313 145

Name: Maryam Daknou

Mail: merraiind@gmail.com

phone: +216 90 007 617

SCAN ME !

FULL PROJECT RESSOURCES

THANK YOU!

for your attention