NeuroDynamics

Where Brains And Machines Converge

Introduction to Time Series in AI: From Basics to Forecasting

AI CELL WORKSHOP

Presented By:
ELGARCH Youssef & TAYI Anouar

Presentation Agenda

Introduction to Time Serie 01

Time Series Data Preprocessing 02

Time Series Forecasting Models 03

TS metrics 04

Hands-on Lab: Cryptocurrency Prediction in Real Time 05

Introduction to Time Serie

Butterfly effect = Past influence the future

George Udall Yule

Founder

Introduction

What is a Time Series?

A time series is a sequence of data points collected, recorded, or measured at successive, evenly-spaced time intervals.

Importance of Time Series Analysis

Predict Future Trends

Detect Patterns and Anomalies

Risk Mitigation

Strategic Planning

Competitive Edge

Domains of Applications

Time series analysis and forecasting have a wide range of applications across various domains. Here are some key areas where time series models are extensively used:

Time Series Data Preprocessing

Time series data is commonly represented graphically with time on the horizontal axis and the variable of interest on the vertical axis, allowing analysts to identify trends, patterns, and changes over time.

we will become the largest trading company in the world that puts forward profit

trading | cryptocurrency | money

Components of Time Series Data

Trend

The long-term direction of the data, showing consistent increase, decrease, or stability.

Cyclic variations:

Long-term, irregular fluctuations in data linked to economic or business cycles.

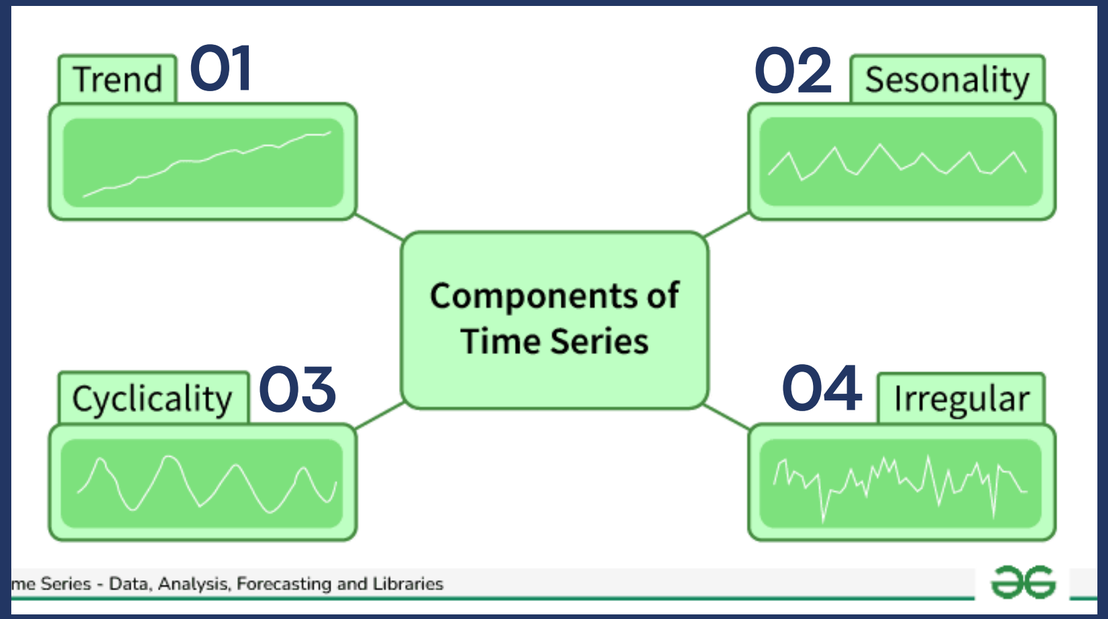

Seasonality

Regular, periodic fluctuations in data influenced by external factors like seasons or holidays.

Irregularity (Noise):

Unpredictable, random fluctuations in data due to unforeseen events or measurement errors.

Time series visualization

Time Series Forecasting Models

Time Series Forecasting is a statistical technique used to predict future values of a time series based on past observations. In simpler terms, it's like looking into the future of data points plotted over time.

we will become the largest trading company in the world that puts forward profit

trading | cryptocurrency | money

Time Series Forecasting Algorithms

Autoregressive (AR) Model

Long Short-Term Memory (LSTM) Networks

Exponential Smoothing (SES, Holt-Winters

ARIMA (AutoRegressive Integrated Moving Average

Seasonal ARIMA (SARIMA)

Vector Autoregression (VAR)

LSTM model - example

LSTM is a special type of Recurrent Neural Network (RNN) designed to remember important patterns over long sequences of data. Unlike a regular neural network, which only considers the current input, LSTM "remembers" past information and uses it to make better predictions in time-series problems.

RNN (Recurrent Neural Network)

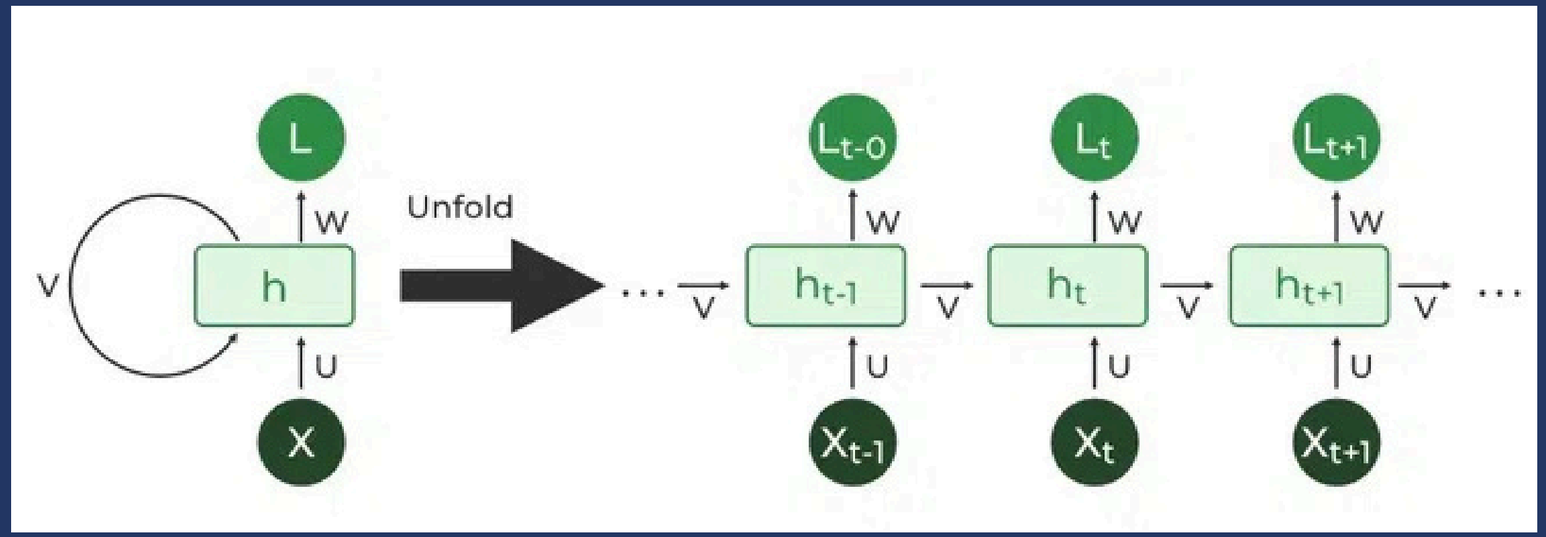

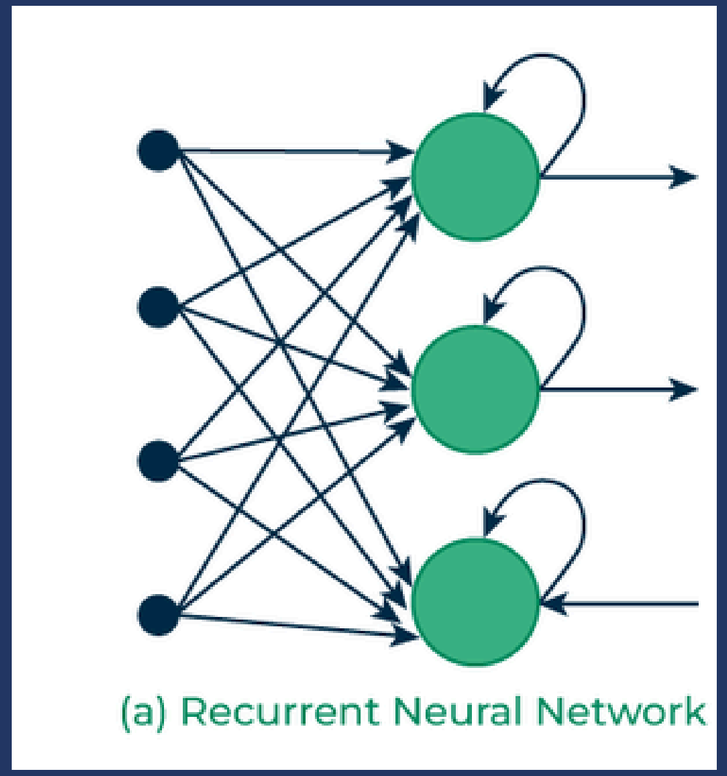

The fundamental processing unit in RNN is a Recurrent Unit.

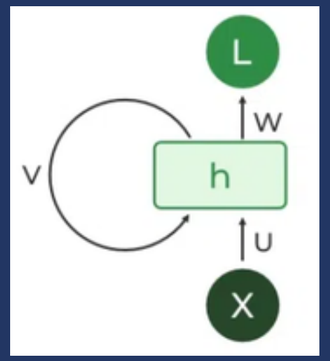

LSTM (Long Short Time Memory)

A traditional RNN has a single hidden state that is passed through time, which can make it difficult for the network to learn long-term dependencies. LSTMs model address this problem by introducing a memory cell, which is a container that can hold information for an extended period.

Forget Gate

$$f_t=\sigma(W_f \cdot [h_{t-1},x_t]+b_f)$$

Input gate

Output gate

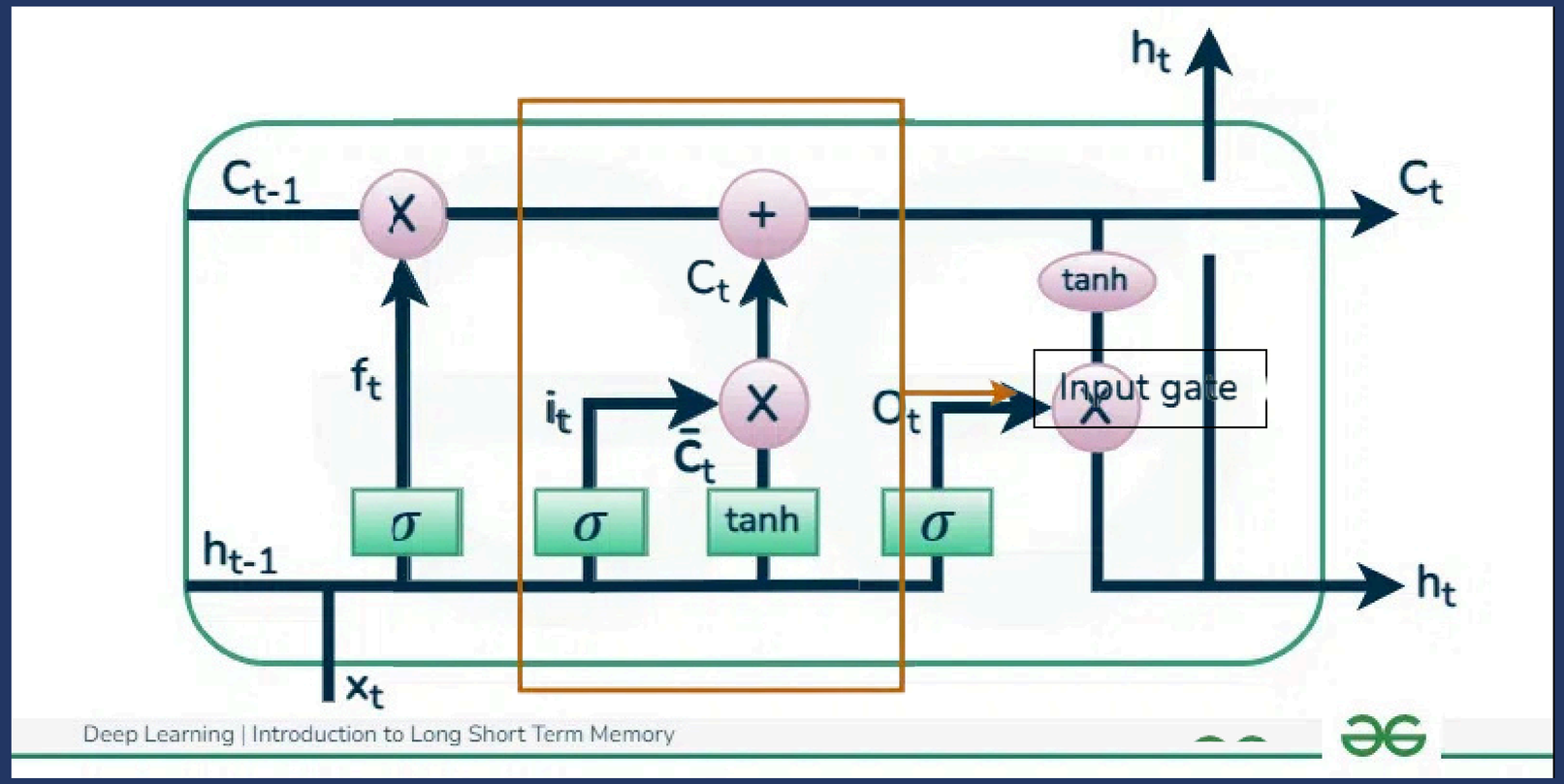

TS metrics

Evaluating Time Series Forecasts involves assessing the accuracy and effectiveness of predictions made by time series forecasting models. This process aims to measure how well a model performs in predicting future values based on historical data.

Common Metrics

- Mean Absolute Error
- Mean Absolute Percentage Error
- Mean Squared Error
- Root Mean Squared Error

LAB - Crypto Forecasting

- Trading can be anywhere and anytime
- You can manage your account easily
- You will get updated progress information

AI Cell

Thank You

See You Next Workshop