Chapter 26

Capacitance and Dielectrics

Sec 26.1: Definition of Capacitance

- Capacitors are devices that store electric charge
- Examples of where capacitors are used include:
  - radio receivers
  - filters in power supplies
  - to eliminate sparking in automobile ignition systems
  - energy-storing devices in electronic flashes
- The capacitance, C, of a capacitor is defined as the ratio of the magnitude of the charge on either conductor to the potential difference between the conductors

$$C \equiv \frac{Q}{\Delta V}$$

- The SI unit of capacitance is the farad (F)

Makeup of a Capacitor

- A capacitor consists of two conductors
  - These conductors are called *plates*
  - When the conductor is charged, the plates carry charges of equal magnitude and opposite directions
- A potential difference exists between the plates due to the charge
- Capacitance will always be a positive quantity
- The capacitance of a given capacitor is constant
- The capacitance is a measure of the capacitor's ability to store charge
- The farad is a large unit, typically you will see microfarads (μF) and picofarads (pF)

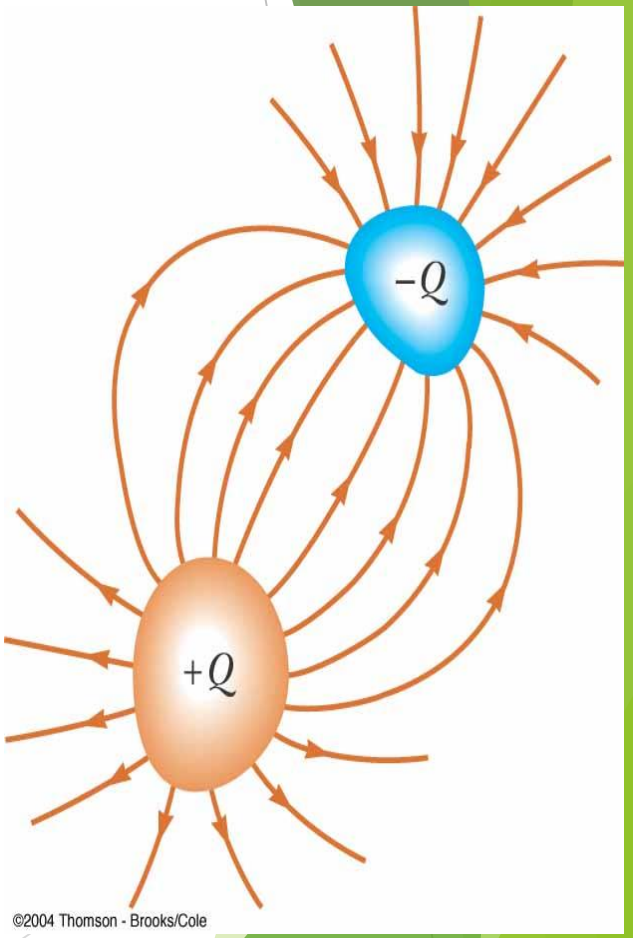

Parallel Plate Capacitor

- Each plate is connected to a terminal of the battery
  - The battery is a source of potential difference
- If the capacitor is initially uncharged, the battery establishes an electric field in the connecting wires
- This field applies a force on electrons in the wire just outside of the plates
- The force causes the electrons to move onto the negative plate
- This continues until equilibrium is achieved
  - The plate, the wire and the terminal are all at the same potential
- At this point, there is no field present in the wire and the movement of the electrons ceases
- The plate is now negatively charged

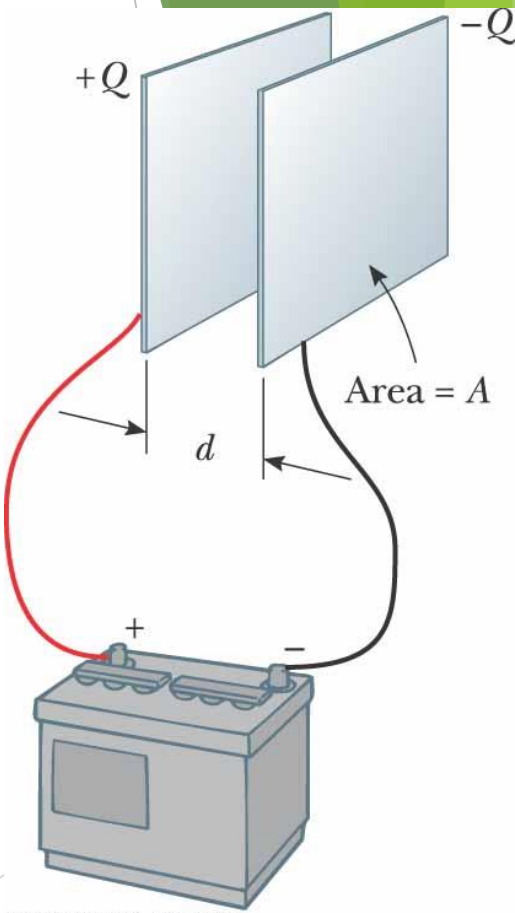

©2004 Thomson - Brooks/Cole

- A similar process occurs at the other plate, electrons moving away from the plate and leaving it positively charged
- In its final configuration, the potential difference across the capacitor plates is the same as that between the terminals of the battery

Quick Quiz 26.1 A capacitor stores charge Q at a potential difference ΔV. What happens if the voltage applied to the capacitor by a battery is doubled to $2\,\Delta V$? **(a)** The capacitance falls to half its initial value, and the charge remains the same. **(b)** The capacitance and the charge both fall to half their initial values. **(c)** The capacitance and the charge both double. **(d)** The capacitance remains the same, and the charge doubles.

Sec 26.2: Calculating Capacitance

* Capacitance – Isolated Sphere :

- Assume a spherical charged conductor with radius *a*
- The sphere will have the same capacitance as it would if there were a conducting sphere of infinite radius, concentric with the original sphere
- Assume $V = 0$ for the infinitely large shell

$$C = \frac{Q}{\Delta V} = \frac{Q}{k_e Q / a} = \frac{a}{k_e} = 4\pi\varepsilon_o a$$

- Note, this is independent of the charge and the potential difference

Capacitance – Parallel Plates

- The charge density on the plates is

$\sigma = Q/A$

  - A is the area of each plate, which are equal
  - Q is the charge on each plate, equal with opposite signs
- The electric field is uniform between the plates and zero elsewhere
- The capacitance is proportional to the area of its plates and inversely proportional to the distance between the plates

$$C = \frac{Q}{\Delta V} = \frac{Q}{Ed} = \frac{Q}{Qd/\varepsilon_o A} = \frac{\varepsilon_o A}{d}$$

Quick Quiz 26.2 Many computer keyboard buttons are constructed of capacitors as shown in Figure 26.3. When a key is pushed down, the soft insulator between the movable plate and the fixed plate is compressed. When the key is pressed, what happens to the capacitance? **(a)** It increases. **(b)** It decreases. **(c)** It changes in a way you cannot determine because the electric circuit connected to the keyboard button may cause a change in ΔV.

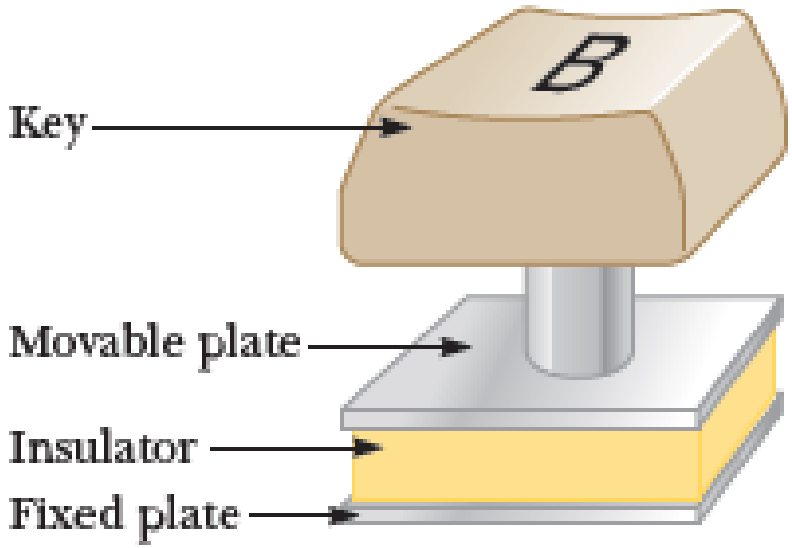

Figure 26.3 (Quick Quiz 26.2) One type of computer keyboard button.

Example 26.1 The Cylindrical Capacitor

A solid cylindrical conductor of radius a and charge Q is coaxial with a cylindrical shell of negligible thickness, radius $b > a$, and charge $-Q$ (Fig. 26.4a). Find the capacitance of this cylindrical capacitor if its length is ℓ.

$$C = \frac{\ell}{2k_e \ln(b/a)}$$

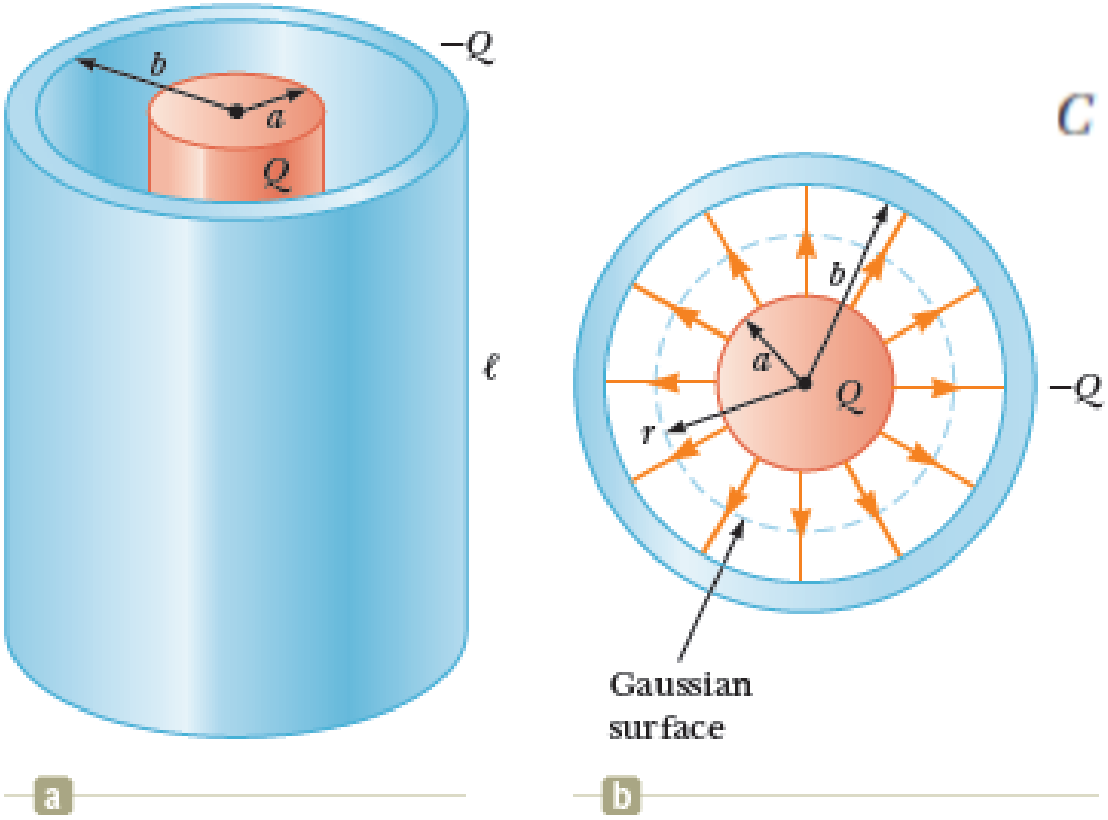

Example 26.2 The Spherical Capacitor

A spherical capacitor consists of a spherical conducting shell of radius b and charge $-Q$ concentric with a smaller conducting sphere of radius a and charge Q (Fig. 26.5, page 782). Find the capacitance of this device.

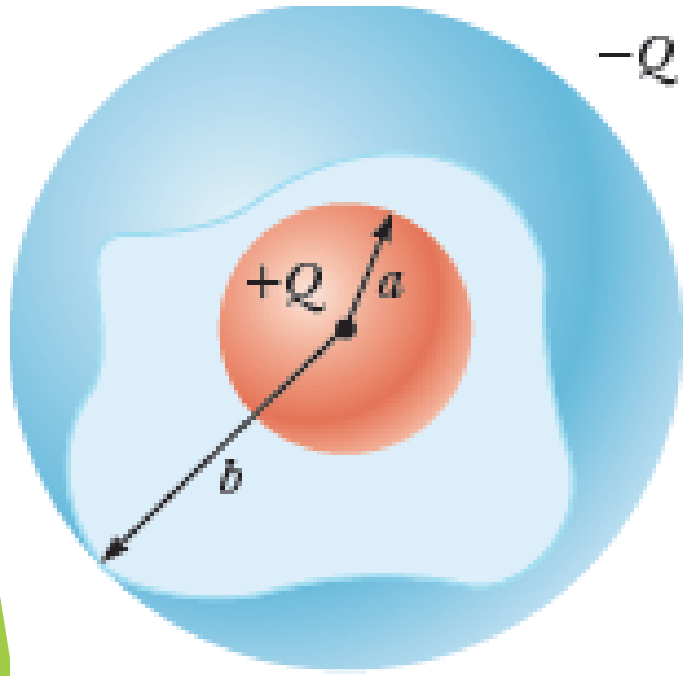

$$C = \frac{ab}{k_e(b-a)}$$

WHAT IF? If the radius b of the outer sphere approaches infinity, what does the capacitance become?

Answer In Equation 26.6, we let $b \to \infty$:

$$C = \lim_{b\to\infty} \frac{ab}{k_e(b-a)} = \frac{ab}{k_e(b)} = \frac{a}{k_e} = 4\pi\epsilon_0 a$$

Sec 26.3: Combinations of Capacitors

- **Circuit Symbols:**
- A circuit diagram is a simplified representation of an actual circuit
- Circuit symbols are used to represent the various elements
- Lines are used to represent wires
- The battery's positive terminal is indicated by the longer line

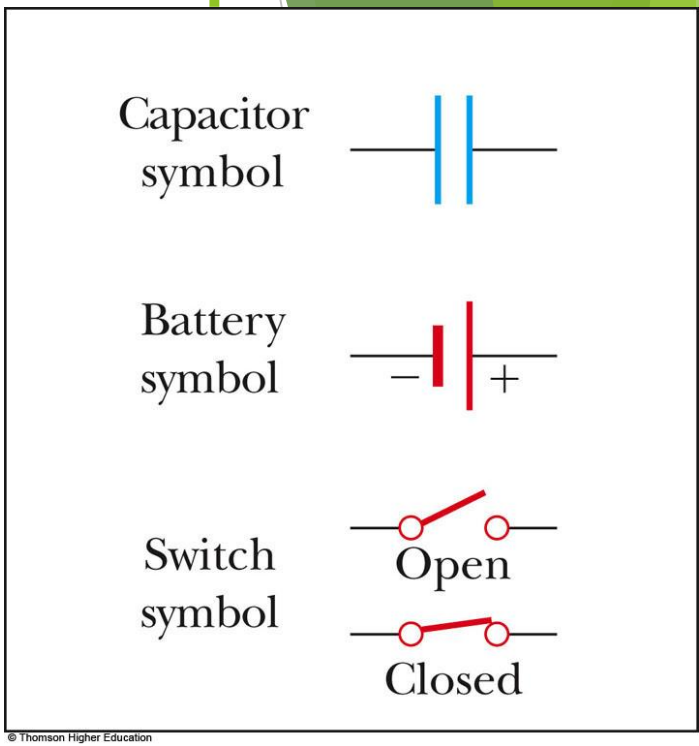

Capacitors in Parallel

- When capacitors are first connected in the circuit, electrons are transferred from the left plates through the battery to the right plate, leaving the left plate positively charged and the right plate negatively charged
- The flow of charges ceases when the voltage across the capacitors equals that of the battery

Capacitors in Parallel

- The potential difference across the capacitors is the same
  - And each is equal to the voltage of the battery
  - $\Delta V_1 = \Delta V_2 = \Delta V$
    - ΔV is the battery terminal voltage
- The capacitors reach their maximum charge when the flow of charge ceases
- The total charge is equal to the sum of the charges on the capacitors
  - $Q_{total} = Q_1 + Q_2$
- The capacitors can be replaced with one capacitor with a capacitance of Ceq
- $C_{eq} = C_1 + C_2 + C_3 + \ldots$
- The equivalent capacitance of a parallel combination of capacitors is greater than any of the individual capacitors

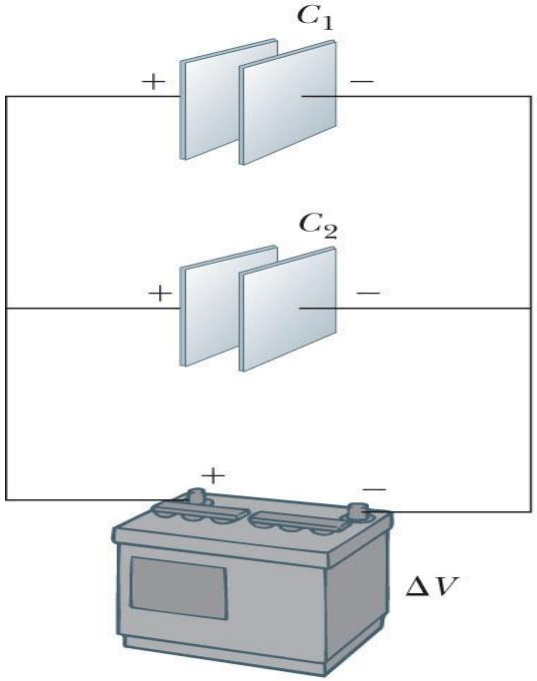

(a)

© Thomson Higher Education

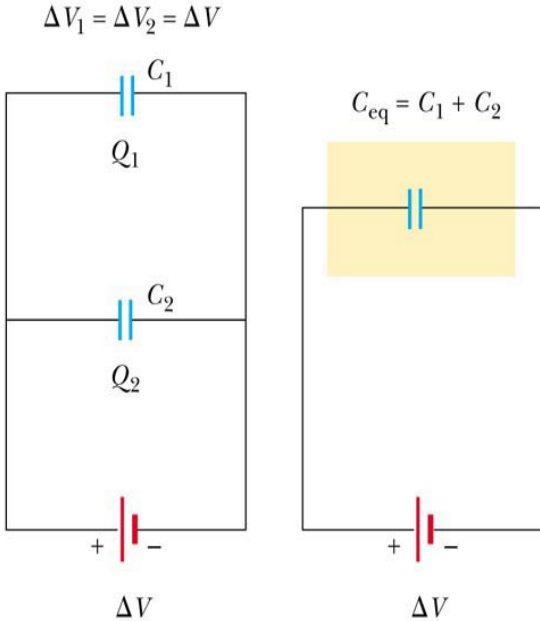

Capacitors in Series

- When a battery is connected to the circuit, electrons are transferred from the left plate of C_1 to the right plate of C_2 through the battery
- As this negative charge accumulates on the right plate of C_2, an equivalent amount of negative charge is removed from the left plate of C_2, leaving it with an excess positive charge
- All of the right plates gain charges of –Q and all the left plates have charges of +Q
- An equivalent capacitor can be found that performs the same function as the series combination
- The charges are all the same

Q1 = Q2 = Q

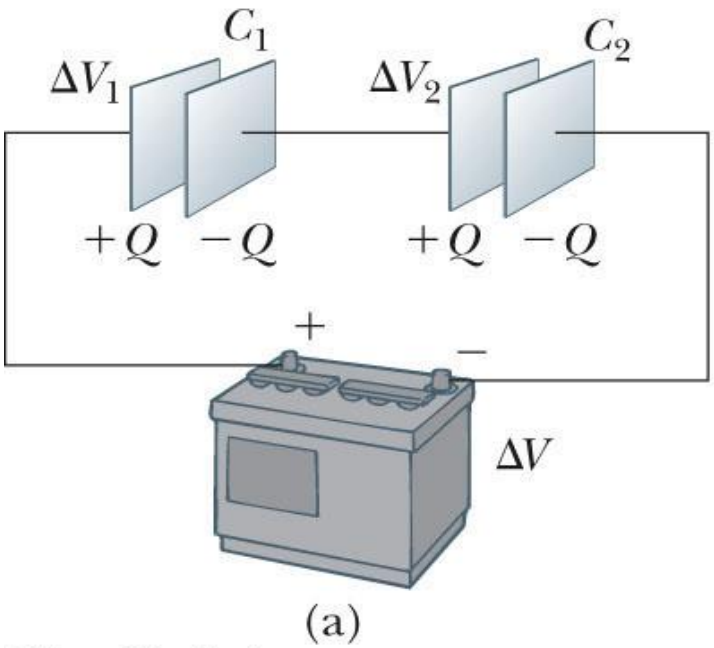

© Thomson Higher Education

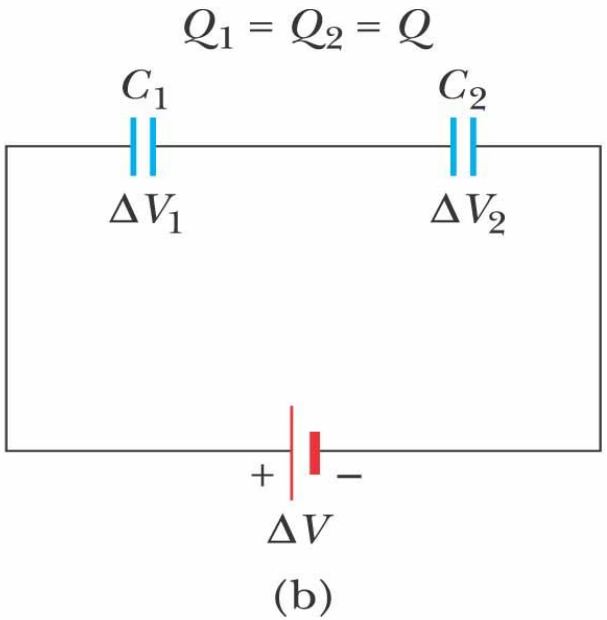

©2004 Thomson - Brooks/Cole

- The potential differences add up to the battery voltage

  $\Delta V_{tot} = \Delta V_1 + \Delta V_2 + \ldots$
- The equivalent capacitance is
- $$\frac{1}{C_{eq}} = \frac{1}{C_1} + \frac{1}{C_2} + \frac{1}{C_3} + \ldots\ldots\ldots.$$
- The equivalent capacitance of a series combination is always less than any individual capacitor in the combination

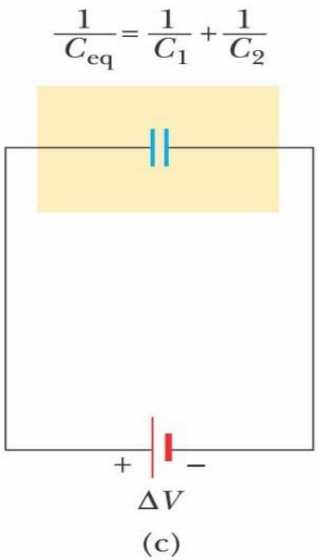

©2004 Thomson - Brooks/Cole

Quick Quiz 26.3 Two capacitors are identical. They can be connected in series or in parallel. If you want the *smallest* equivalent capacitance for the combination, how should you connect them? (a) in series (b) in parallel (c) either way because both combinations have the same capacitance

Example 26.3 Equivalent Capacitance

Find the equivalent capacitance between a and b for the combination of capacitors shown in Figure 26.9a. All capacitances are in microfarads.

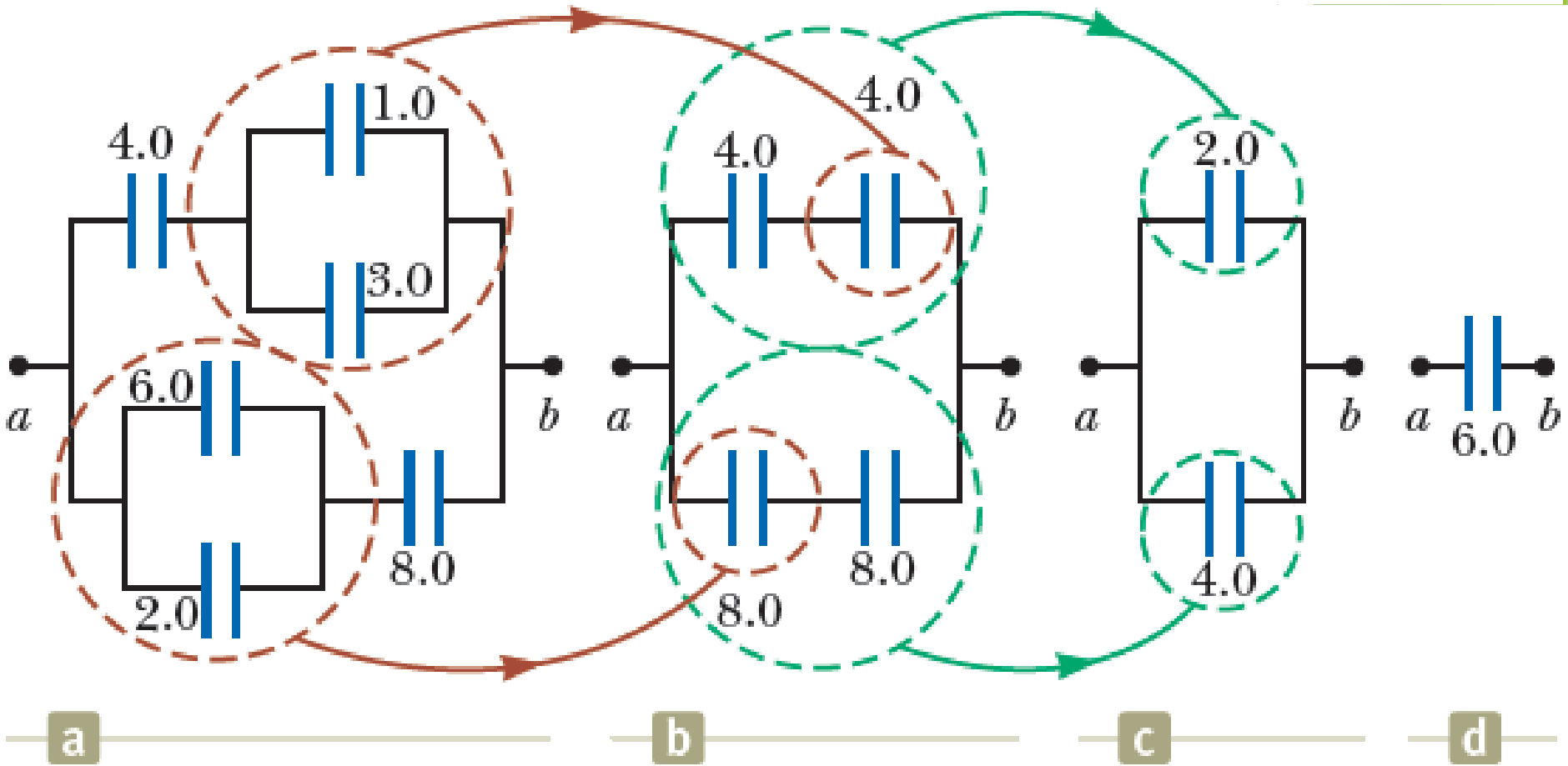

$$C_{eq} = C_1 + C_2 = 4.0\ \mu F$$

$$C_{eq} = C_1 + C_2 = 8.0\ \mu F$$

$$\frac{1}{C_{eq}} = \frac{1}{C_1} + \frac{1}{C_2} = \frac{1}{4.0\ \mu F} + \frac{1}{4.0\ \mu F} = \frac{1}{2.0\ \mu F}$$

$$C_{eq} = 2.0\ \mu F$$

$$\frac{1}{C_{eq}} = \frac{1}{C_1} + \frac{1}{C_2} = \frac{1}{8.0\ \mu F} + \frac{1}{8.0\ \mu F} = \frac{1}{4.0\ \mu F}$$

$$C_{eq} = 4.0\ \mu F$$

$$C_{eq} = C_1 + C_2 = 6.0\ \mu F$$

Sec 26.4: Energy Stored in a Charged Capacitor

- Before the switch is closed, the energy is stored as chemical energy in the battery
- When the switch is closed, the energy is transformed from chemical to electric potential energy
- The electric potential energy is related to the separation of the positive and negative charges on the plates

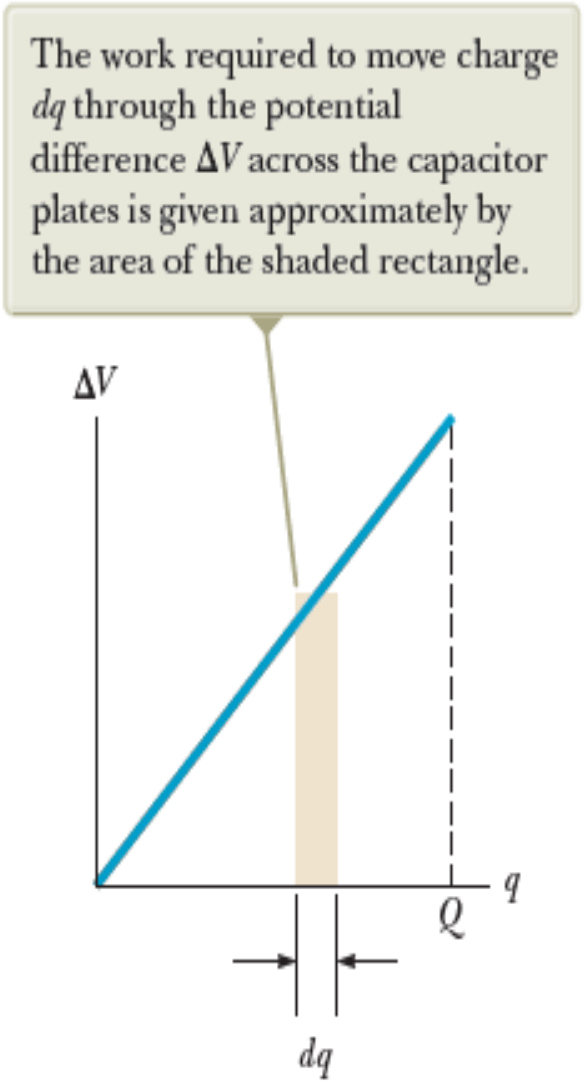

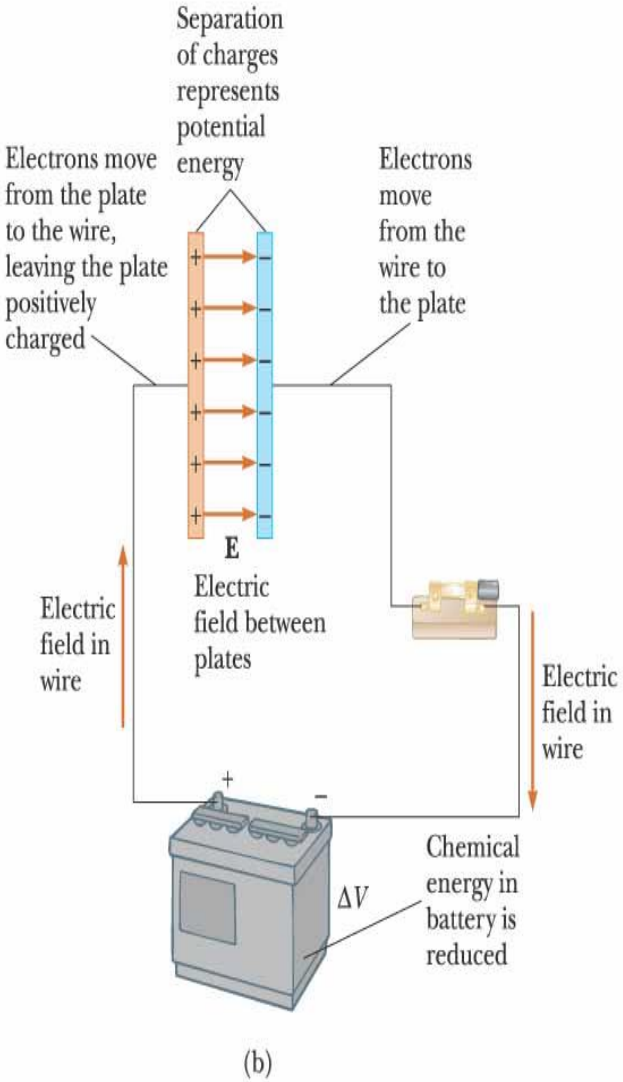

©2004 Thomson - Brooks/Cole

- A capacitor is a device that stores energy as well as charge
- The work done in charging the capacitor appears as electric potential energy *U*:

$$U = \frac{Q^2}{2C} = \frac{1}{2}Q\Delta V = \frac{1}{2}C(\Delta V)^2$$

- The energy stored increases as the charge increases and as the potential difference increases
- In practice, there is a maximum voltage before discharge occurs between the plates
- The energy can be considered to be stored in the electric field
- For a parallel-plate capacitor, the energy can be expressed in terms of the field as $U = \frac{1}{2}(\varepsilon_0 Ad)E^2$
- It can also be expressed in terms of the energy density (energy per unit volume)

$$u_E = \frac{1}{2}\varepsilon_0 E^2$$

Sec 26.5: Capacitors with Dielectrics

- A *dielectric* is a nonconducting material that, when placed between the plates of a capacitor, increases the capacitance
  - Dielectrics include rubber, glass, and waxed paper
- With a dielectric, the capacitance becomes $C = \kappa C_o$
  - The capacitance increases by the factor κ when the dielectric completely fills the region between the plates
  - κ is the **dielectric constant** of the material
- For a parallel-plate capacitor, $C = \kappa \varepsilon_o (A/d)$
- In theory, d could be made very small to create a very large capacitance
- For a given d, the maximum voltage that can be applied to a capacitor without causing a discharge depends on the **dielectric strength** of the material
- Dielectrics provide the following advantages:
  - Increase in capacitance
  - Increase the maximum operating voltage

$$\Delta V = \frac{\Delta V_0}{\kappa}$$

TABLE 26.1

Approximate Dielectric Constants and Dielectric Strengths of Various Materials at Room Temperature

Material	Dielectric Constant κ	Dielectric Strength[a] (10^6 V/m)
Air (dry)	1.000 59	3
Bakelite	4.9	24
Fused quartz	3.78	8
Mylar	3.2	7
Neoprene rubber	6.7	12
Nylon	3.4	14
Paper	3.7	16
Paraffin-impregnated paper	3.5	11
Polystyrene	2.56	24
Polyvinyl chloride	3.4	40
Porcelain	6	12
Pyrex glass	5.6	14
Silicone oil	2.5	15
Strontium titanate	233	8
Teflon	2.1	60
Vacuum	1.000 00	—
Water	80	—

[a] The dielectric strength equals the maximum electric field that can exist in a dielectric without electrical breakdown. These values depend strongly on the presence of impurities and flaws in the materials.

© Thomson Higher Education

Example 26.5 Energy Stored Before and After AM

A parallel-plate capacitor is charged with a battery to a charge Q_0. The battery is then removed, and a slab of material that has a dielectric constant κ is inserted between the plates. Identify the system as the capacitor and the dielectric. Find the energy stored in the system before and after the dielectric is inserted.

$$U_0 = \frac{Q_0^2}{2C_0}$$

$$U = \frac{Q_0^2}{2C}$$

$$U = \frac{Q_0^2}{2\kappa C_0} = \frac{U_0}{\kappa}$$