3. Current Electricity

- Potential and potential difference
- Conductors and insulators (bad conductors)
- Electrical resistance and Ohm's Law
- Connection of resistors and effective resistance

All around us

Electricity is of utmost importance in the modern world. We depend on it for almost everything in our day to day life. In order to avoid the inconvenience faced due to failure of power supply, hospitals, banks, offices and private institutions make alternative arrangements with the help of generators. Electricity is used for running electric furnaces, electric motors and several other instruments used in industries.

Domestic appliances like the fridge, electric oven, mixer, fans, washing machines, vacuum cleaner, rotimaker, etc. have helped us by saving time and labour. All these devices cannot be run without electricity.

Not only human beings but some animals also use electricity. For example, fishes such as eels use electricity to catch their prey and also for self-defence. The lightning that strikes the earth is an excellent example of natural flow of electricity. What if we could collect and store this electricity!

Can you recall?

You must have seen a waterfall. Which way does the water flow?

For the generation of electricity, water is released from a dam at a higher level and because of gravity, it falls to a lower level. Thus, as we know, the direction of flow of water between two points depends on the level of the two points.

Potential and potential difference

Try this

Equipment : Two plastic bottles, rubber tube, clamp, water.
Procedure : Set up the experiment as shown in figure 3.1. Then remove the clamp from the rubber tube. Note your observations. Answer the following questions.

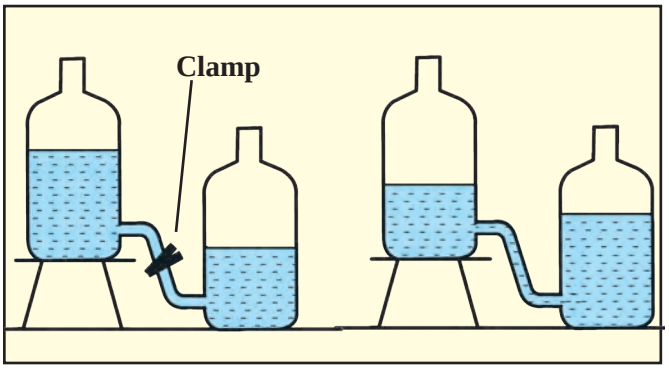

3.1 Level of water and direction of flow

1. What happens when the clamp is removed?
2. Does the water stop flowing? Why?
3. What will you do to keep the water flowing for a longer duration?

Just like water, the flow of electric charge between two points depends on a kind of electric level at those points. This level is called electric potential.

A positive charge flows from a point of higher potential to a point of lower potential. We have seen earlier that electricity flows due to the conduction of negatively charged electrons. Electrons flow from the point of lower potential to a point of higher potential. A lightning strike is the flow of electrons from point of lower (negative) potential on the clouds to the point of higher (zero) potential on the earth. We shall study the definition of electric potential in higher standards.

The difference between the values of potentials at two points A and B is called the potential difference between them.

In the figure 3.2, conductor A is at a higher potential than conductor B. When these two are connected by a conducting wire, a potential difference is created between its two ends and electrons will flow from B to A through the wire. This flow will continue until the two conductors, A and B have the same potential, i.e. until their potential difference becomes zero. Only then will the flow of electrons stop.

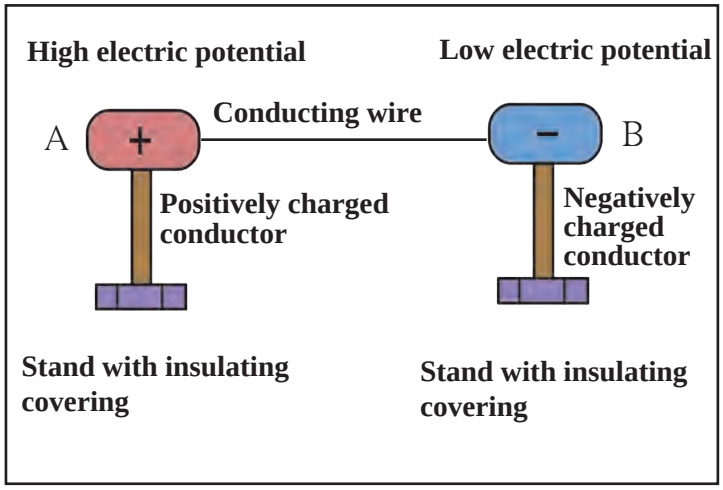

3.2 Potential difference and flow of electricity

Work has to be done against the electric field to take a positive charge from a point of lower potential to a point of higher potential.

Potential difference of a cell

The difference in potential between the positive and negative terminals of a cell is the potential difference of that cell. This potential difference is caused by chemical reactions occurring inside the cell. The potential difference sets the electrons in motion and results in the flow of electricity through a conducting wire connected to the two ends of the cell.

The amount of work done to carry a unit positive charge from point A to point B is called the electric potential difference between the two points.

$$\text{Potential difference between two points} = \frac{\text{Work}}{\text{Total charge transferred}}, \quad V = \frac{W}{Q}$$

$$1\ V = \frac{1J}{1C}$$ The unit of potential difference in SI system is volt.

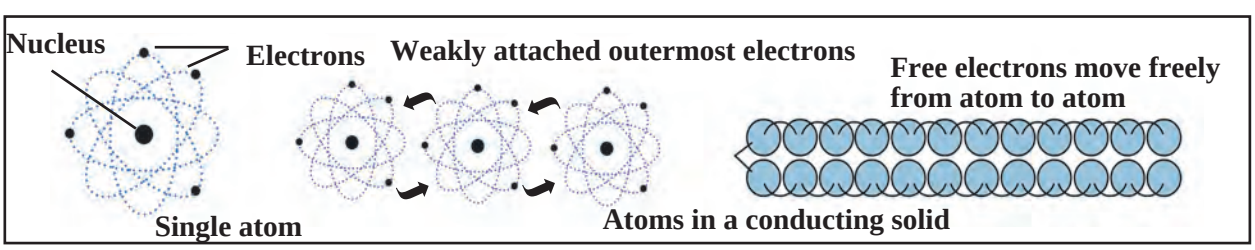

3.3 Free electrons

An introduction to scientists

The Italian scientist Alessandro Volta constructed the first electric cell. The unit of potential difference is named 'volt' in his honour.

Volta's simple electric cell

Do you know?

Very small values of potential difference are expressed in the following units. 1. 1mV (millivolt) = 10^{-3} V 2. 1μV (microvolt) = 10^{-6} V	Large values of potential difference are expressed in the following units. 1. 1kV (kilovolt) = 10^{3} V 2. 1MV (megavolt) = 10^{6} V

Free electrons : Every atom of a metallic conductor has one or more outermost electrons which are very weakly bound to the nucleus. These are called free electrons.
As shown in figure 3.3, these electrons can easily move from one part of a conductor to its other parts. The negative charge of the electrons also gets transferred as a result of this motion. The free electrons in a conductor are the carriers of negative charge.

Current flowing through a wire

As shown in the figure 3.4 A, if a conducting wire is not connected to a cell, its free electrons move randomly in all directions in the space between the atoms. When we connect the ends of the wire to the two terminals of a cell, electric force acts on the electrons. Being negatively charged, they start moving from the negative (lower potential) to the positive (higher potential) terminal of the cell, as shown in figure 3.4 B. Due to the flow of these electrons, current starts to flow through the wire. This motion of electrons is irregular but there is a definite, non-zero value to their average velocity.

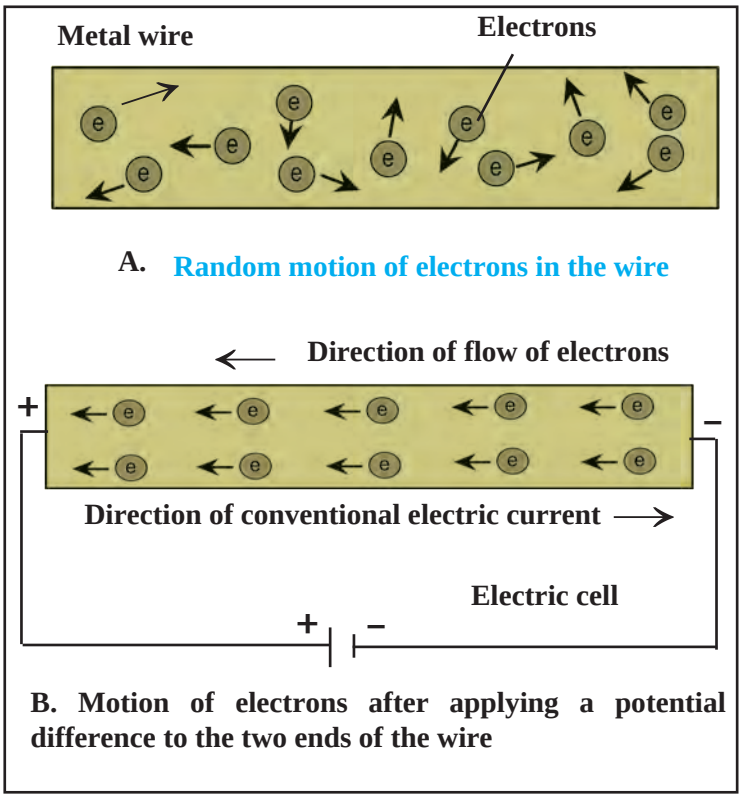

3.4 Motion of free electrons

Electric current

An electric current is the flow of electrons through a conductor. Quantitatively, current (I) is defined as the charge passing through a conductor in unit time.

If charge Q is flowing through cross-section of a conductor in time t then the

$$\text{current} = I = \frac{Q}{t}$$

Even though, electrons move from negative end to positive end, conventionally, the direction of current flow is taken to be opposite of the direction of flow of electrons i.e. from the +ve end to the –ve end of a cell.

The unit of charge in SI units is Coulomb (C). Current is expressed in Ampere (A). The charge of one electron is 1.6×10^{-19} C.

Ampere : One ampere current is said to flow in a conductor if one Coulomb charge flows through it every second.

$$1A = \frac{1C}{1s}$$

Do you know?

Very small values of current are expressed in the following units.

1. 1mA (mili ampere) = 10^{-3} A
2. 1μA (micro ampere) = 10^{-6} A

The French mathematician and scientist, Ampere, conducted a number of experiments on electricity. Today, we can measure the current flowing in a conductor only because of his work. The unit of current is called ampere in recognition of his work.

Example : A current of 0.4 A flows through a conductor for 5 minutes. How much charge would have passed through the conductor?

Given : I = 0.4 A

t = 5 min = 5 × 60 s = 300 s

Formula Q = I × t

Q = 0.4 A × 300 s

Q = 120 C.

∴ Charge passing through the conductor = 120 C

Using ICT

Study current electricity and other scientific concepts with the help of simulation technology .

Website :

www.phet.colorado.edu

www.edumedia-sciences.com

Find some more websites like the ones mentioned above and share them with others.

Resistance and Ohm's Law

Ohm's law

The relationship between the current flowing through a wire (I) and the potential difference across its ends (V) can be obtained from the law that was given by the German scientist George Simon Ohm.

If the physical state of a conductor remains constant, the current (I) flowing through it is directly proportional to the potential difference (V) between its two ends.

$I \alpha V$

$I = kV$ (k = constant of proportionality)

$I \times \frac{1}{k} = V$ ($\frac{1}{k}$ = R = Resistance of the conductor)

$I \times R = V$ Hence $V = IR$ or $R = \frac{V}{I}$

This is known as Ohm's law.

Physical state of a conductor means its length, area of cross-section, temperature and the material it is made up of.

We can obtain the SI unit of resistance from the above formula. Potential difference and current are measured in Volts and Amperes respectively. The unit of resistance is called Ohm. It is indicated by the symbol Ω.

$$\therefore \frac{1 \text{ Volt}}{1 \text{ Ampere}} = 1 \text{ Ohm } (\Omega)$$

Resistance of one Ohm : If one Ampere current flows through a conductor when one Volt potential difference is applied between its ends, then the resistance of the conductor is one Ohm.

Resistance and resistivity of a conductor

As shown in figure 3.4, there are a large number of free electrons in a conductor. They are constantly in random motion. When a potential difference is applied between the two ends of the conductor, these electrons start moving from the end at lower potential to the end at higher potential. This directional motion of the electrons causes the flow of current. Moving electrons strike the atoms and ions which lie along their path. Such collisions cause hindrance to the flow of electrons and oppose the current. This hindrance is called the resistance of the conductor.

Resistivity : At a given temperature, the resistance (R) of a conductor depends on its length (L), area of cross-section (A) and the material it is made of.

German physicist, George Simon Ohm established a law for measuring the resistance of a conductor. In his honour, the unit of resistance is called the Ohm.

If the resistance of a conductor is R, then

$$R \alpha L$$

Also, $$R \alpha \frac{1}{A}$$

$$\therefore \quad R \alpha \frac{L}{A}$$

$$R = \rho \frac{L}{A}$$

Think about it

How will you prove that the unit of resistivity is Ω m ?

Resistivity of some materials

Copper – $1.7 \times 10^{-8}\ \Omega$ m

Nichrome – $1.1 \times 10^{-6}\ \Omega$ m

Diamond – 1.62×10^{13} to $1.62 \times 10^{18}\ \Omega$ m

ρ is the constant of proportionality and is called the resistivity of the material. The unit of resistivity in SI units is Ohm metre (Ωm). Resistivity is a specific property of a material and different materials have different resistivity

Electric circuit

A continuous path of an electric current through conducting wires connected to the two ends of a cell and other resistances is called an electric circuit. A circuit is depicted by a figure. This figure shows how different components are to be connected in the circuit, by using special symbols for each of the components. Such a figure is called an electric circuit diagram.

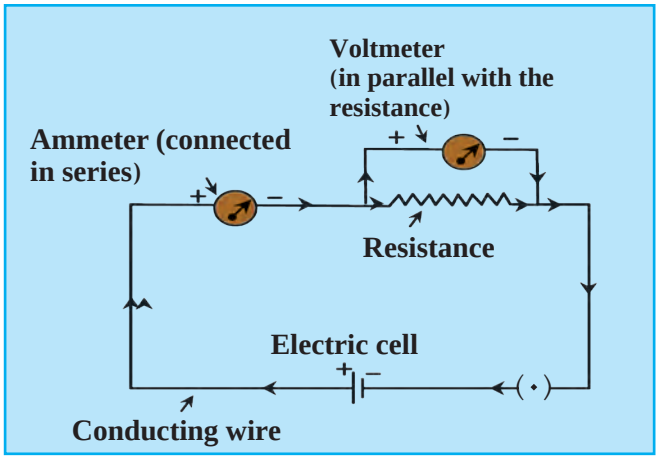

3.5 Electrical circuit

In the circuit in figure 3.5, an ammeter is used to measure current and a voltmeter to measure the potential difference between the two ends of a resistor. As the voltmeter has a very high resistance, only very small current flows through it.

Observe

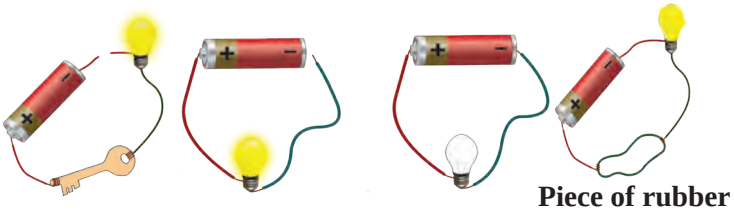

1. Point out the mistakes in the figure above.

2. Why are the bulbs in Figures B, C and D below not lighting up ?

A B C D E

Symbols for components of an electric circuit and their uses

Component	Picture	Symbol	Use
Electric cell			To apply a potential difference between two ends of a conductor
Battery (collection of a number of cells)			To apply a larger potential difference between two ends of a conductor
Open tap key or plug key			To stop the flow of current flowing in a circuit by disconnecting two ends of a wire
Closed tap key or plug key			To start the flow of current in a circuit by connecting two ends of a wires.
Connecting (conducting) wires			To connect various components in the circuit.
Crossing wires		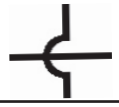	To show wires which cross but are not connected
Light bulb			To test the flow of electricity : Lighted : current is flowing; unlighted : current is not flowing
Resistance			To control the flow of current in the circuit
Variable resistance			To change the resistance as required and thereby control the current
Ammeter			To measure the current flowing in the circuit
Voltmeter			To measure the potential difference between two points in the circuit

Try this

Material: copper and aluminium wires, glass rod, rubber

Method : Make connections as shown in figure 3.6. First connect a copper wire between points A and B and measure the current in the circuit. Then, in place of the copper wire, connect aluminium wire, glass rod, rubber, etc, one at a time and measure the current each time. Compare the values of the current in different cases.

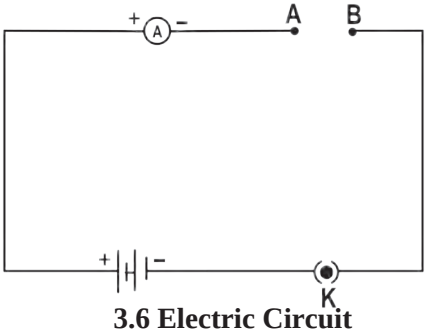

3.6 Electric Circuit

Conductors and insulators

We have learnt about the resistance to an electric current. We can divide substances into conductors and insulators (bad conductors).

Conductors : Those substances which have very low resistance are called conductors. Current can flow easily through such materials.

Insulators : Those substances which have extremely high resistance and through which current cannot flow are called insulators.

1. Why are some substances conductors while others are insulators?
2. Why can our body conduct electricity?

Make a list of conductors and insulators you see around you.

Experimental proof of Ohm's law :

Try this

Material : 4 cells of 1.5 V each, ammeter, voltmeter, conducting wires, nichrome wire, plug key.

Procedure :

1. Set up the circuit as shown in figure 3.7.
2. Use the nichrome wire XY as the resistance.
3. Connect one of the 4 cells as shown in figure 3.7 (a.) Take readings of ammeter and voltmeter and enter them in the table below.
4. Now add the rest of the cells one by one as shown in figures 3.7 (b, c and d). Enter the readings in the table for each case.
5. Determine the values of $\frac{V}{I}$ for each case.
6. Draw a graph between current and potential difference and study it.

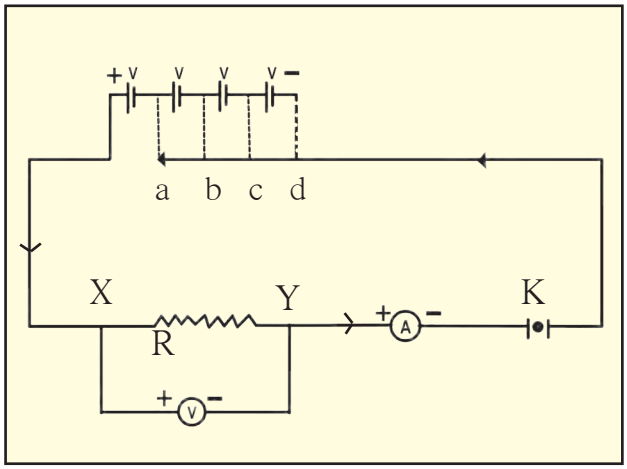

3.7 Verification of Ohm's Law

Observation chart

No.	Number of cells used	Current (I) (mA)	Current (I) (A)	Potential difference (Volts)	V / I = R in (Ω)
1.					
2.					
3.					
4.					

Solved examples : Ohm's law and resistivity

Example 1 : The resistance of the filament in a light bulb is 1000 Ω. If the bulb is fed by a current from a source of potential difference 230 V, how much current will flow through it?

Given : $R = 1000\ \Omega$

$V = 230\ V$

Formula $I = \frac{V}{R}$

$\therefore I = \frac{230\ V}{1000\ \Omega} = 0.23\ A.$

∴ The current flowing through the filament of the bulb = 0.23 A.

Example 2 : The length of a conducting wire is 50 cm and its radius is 0.5 mm. If its resistance is 30 Ω, what is the resistivity of its material?

Given : $L = 50\ cm = 50 \times 10^{-2}\ m$

$r = 0.5\ mm = 0.5 \times 10^{-3} m$

$= 5 \times 10^{-4}\ m$ and $R = 30\ \Omega$

Resistivity $\rho = \frac{RA}{L}$

and $A = \pi r^2$

$$\therefore \rho = R\ \frac{\pi r^2}{L}$$

$$= \frac{30 \times 3.14 \times (5 \times 10^{-4})^2}{50 \times 10^{-2}}$$

$$= \frac{30 \times 3.14 \times 25 \times 10^{-8}}{50 \times 10^{-2}}$$

$= 47.1 \times 10^{-6}\ \Omega\ m$

$= 4.71 \times 10^{-5}\ \Omega\ m$

∴ Resistivity of the wire $4.71 \times 10^{-5}\ \Omega\ m$

Example 3 : A current of 0.24 A flows through a conductor when a potential difference of 24 V is applied between its two ends. What is its resistance?

Given : $V = 24\ V, I = 0.24\ A$

Formula $R = \frac{V}{I}$

$\therefore I = \frac{24\ V}{0.24\ A}$

$R = 100\ \Omega$

The resistance of the conductor is 100 Ω.

Example 4 : Determine the current that will flow when a potential difference of 33 V is applied between two ends of an appliance having a resistance of 110 Ω. If the same current is to flow through an appliance having a resistance of 500 Ω, how much potential difference should be applied across its two ends?

Given : $V = 33\ V$ and $R = 110\ \Omega$

In the first case,

$$I = \frac{V}{R} = \frac{33}{110}$$

$\therefore I = 0.3\ A$

Current flowing through the appliance = 0.3 A

In the second case,

$I = 0.3\ A, R = 500\ \Omega$

$V = IR = 0.3 \times 500\ V = 150\ V.$

The required potential difference between its two ends = 150 V

Using ICT

Using the internet find out about the different softwares used to solve mathematical problems and use them to solve problems given in this and other chapters.

Example 5 : Determine the resistance of a copper wire having a length of 1 km and diameter of 0.5 mm

Given : ρ = Resistivity of copper = $1.7 \times 10^{-8}\,\Omega$ m

Converting all measures into metres.

L = 1 km = 1000 m = 10^3 m

d = 0.5 mm = 0.5×10^{-3} m

If r is the radius of the wire then, its area of cross-section

$A = \pi r^2$

$$\therefore\ A = \pi \times \left(\frac{d}{2}\right)^2$$

$$= \frac{\pi}{4}(0.5 \times 10^{-3})^2\,m^2 = 0.2 \times 10^{-6}\,m^2$$

$$R = \rho\frac{L}{A} = \frac{1.7 \times 10^{-8}\,\Omega\,m \times (10^3 m)}{0.2 \times 10^{-6} m^2} = 85\,\Omega$$

System of resistors and effective resistance

A resistor is a two ended component having a given amount of resistance between its two ends. In several electrical devices, a number of resistors are connected together in different ways. Ohm's law is applicable to all such connected resistors.

Resistors in series

Study figure 3.8.

You can see that the ends of the three resistors are connected so that they follow one after the other in a single line. These resistors are said to be connected in 'series.' In such an arrangement, the same current flows through each resistor. The value of current is I and the potential difference between C and D is V.

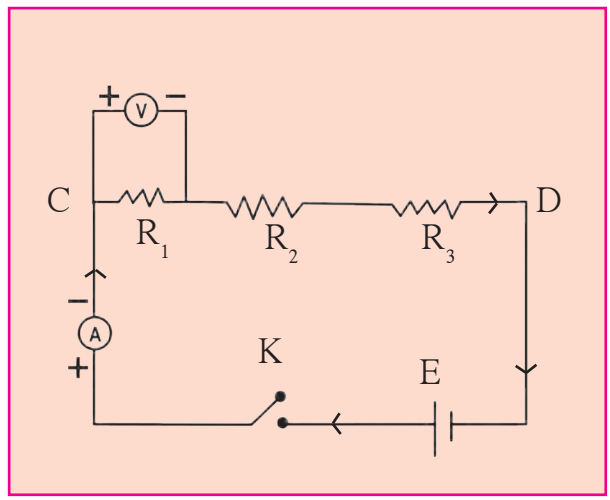

3.8 Resistors in series

The three resistors, R_1, R_2 and R_3 are connected in series in the circuit. If V_1, V_2, V_3 are potential differences of every resistor R_1, R_2 and R_3 respectively, then

$$V = V_1 + V_2 + V_3 \text{--------}(1)$$

If R_S (S for series) is the effective resistance between C and D, then, according to Ohm's law,

$$V = I R_S$$

$V_1 = IR_1$, $V_2 = IR_2$ and $V_3 = IR_3$. Substituting all these in equation (1) we get,

$$I R_S = I R_1 + I R_2 + I R_3$$

$$R_S = R_1 + R_2 + R_3$$

If n resistors are connected in series then,

$$R_s = R_1 + R_2 + R_3 + \text{-------} + R_n$$

If resistors are connected in series,

1. The same current flows through each resistor.
2. The effective resistance of the resistors is equal to the sum of their individual resistances.
3. The potential difference between the two extremes of the arrangement is equal to the sum of the potential differences across individual resistors.
4. The effective resistance is larger than each of the individual resistances.
5. This arrangement is used to increase the resistance in a circuit.

Do you know?

When resistors are connected in series, they are connected one after another. If any one of them does not function, the circuit breaks and there is no flow of electricity. If two bulbs are connected in series, they will both give less light than if they had been connected individually. If three bulbs are connected in series, their light output will decrease further.

Think about it : What is the reason behind this?

Solved examples for resistors in series

Example 1 : Three resistors having resistances of 15 Ω, 3 Ω and 4 Ω are connected in series. What is the effective resistance in the circuit?

Given : $R_1 = 15\ \Omega$, $R_2 = 3\ \Omega$, $R_3 = 4\ \Omega$

Effective resistance $R_s = R_1 + R_2 + R_3 = 15 + 3 + 4 = 22\ \Omega$

∴ The effective resistance in the circuit = 22 Ω

Example 2 : Two resistors having resistances of 16 Ω and 14 Ω are connected in series. If a potential difference of 18 V is applied across them, calculate the current flowing through the circuit and the potential difference across the end of each individual resistor.

Given : $R_1 = 16\ \Omega$ and $R_2 = 14\ \Omega$

$R_s = 14\ \Omega + 16\ \Omega = 30\ \Omega$

Let the current flowing through the circuit be I and the potential differences across the end 16 Ω and 14 Ω be V_1 and V_2 respectively.

$V = I R \qquad V = V_1 + V_2 = 18\ V$

$$I = \frac{V}{R} = \frac{18\ V}{30\ \Omega}$$

∴ I = 0.6 A.

$V_1 = I R_1$

$V_1 = 0.6 \times 16 = 9.6\ V$

$V_2 = I R_2 = 0.6 \times 14 = 8.4\ V$

∴ The current flowing in the circuit is 0.6 A and the potential differences across the end of the resistances 16 Ω and 14 Ω are 9.6 V and 8.4 V respectively.

Do you know?

The resistance of some conductors becomes nearly zero if their temperature is decreased upto a certain value close to 0 Kelvin (K). Such conductors are called super conductors.

Some conductors do not obey Ohm's law. Such conductors are called non-ohmic conductors.

Resistors in parallel

Resistors are said to be connected in parallel when their ends are connected at both sides as shown in figure 3.9. The figure shows three resistors R_1, R_2 and R_3 connected in parallel between points C and D. V is the potential difference between C and D. Let I_1, I_2 and I_3 be the currents flowing through R_1, R_2, and R_3 respectively.

Then, the total current flowing through the circuit is

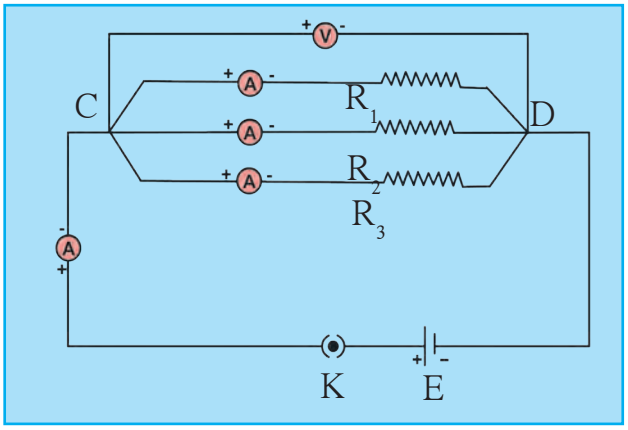

3.9 Resistors in parallel

$$I = I_1 + I_2 + I_3 \text{-------}(1)$$

Let R_p (p for parallel) be the effective resistance between C and D. According to Ohm's law,

$$I = \frac{V}{R_P} \quad \text{Similarly } I_1 = \frac{V}{R_1}, \; I_2 = \frac{V}{R_2}, \; I_3 = \frac{V}{R_3}$$

Substituting these in equation (1)

$$\frac{V}{R_P} = \frac{V}{R_1} + \frac{V}{R_2} + \frac{V}{R_3}$$

$$\therefore \frac{1}{R_P} = \frac{1}{R_1} + \frac{1}{R_2} + \frac{1}{R_3}$$

If n resistors are connected in parallel,

$$\frac{1}{R_P} = \frac{1}{R_1} + \frac{1}{R_2} + \frac{1}{R_3} + \ldots\ldots + \frac{1}{R_n}$$

Even if any one of the several bulbs connected in parallel becomes non-functional because of some damage to its filament, the circuit does not break as the current flows through the other paths, and the rest of the bulbs light up.

When several bulbs are connected in parallel, they emit the same amount of light as when they are connected individually in the circuit, while bulbs connected in series emit less light than when connected individually.

If a number of resistors are connected in parallel,

1. The inverse of the effective resistance is equal to the sum of the inverses of individual resistances.
2. The current flowing through an individual resistor is proportional to the inverse of its resistance and the total current flowing through the circuit is the sum of the currents flowing through individual resistors.
3. The potential difference across the end of all resistors is the same.
4. The effective resistance of resistors connected in parallel is less than the least resistance of individual resistors.
5. This arrangement is used to reduce the resistance in a circuit.

Solved examples of resistors in parallel

Example 1: Resistors having resistances of 15 Ω, 20 Ω and 10 Ω are connected in parallel. What is the effective resistance in the circuit?

Given : $R_1 = 15\ \Omega$, $R_2 = 20\ \Omega$ and $R_3 = 10\ \Omega$

$$\frac{1}{R_P} = \frac{1}{R_1} + \frac{1}{R_2} + \frac{1}{R_3}$$

$$\frac{1}{R_P} = \frac{1}{15} + \frac{1}{20} + \frac{1}{10} = \frac{4+3+6}{60} = \frac{13}{60}$$

$$R_P = \frac{60}{13} = 4.615\ \Omega$$

∴ Effective resistance in the circuit = 4.615 Ω, less than the least of the three, 10 Ω.

Example 2 : Three resistors having resistances of 5 Ω, 10 Ω and 30 Ω are connected in parallel and a potential difference of 12 V is applied across them. Obtain the current flowing through the circuit and through individual resistors. What is the effective resistance in the circuit?

Given : $R_1 = 5\ \Omega$, $R_2 = 10\ \Omega$ and $R_3 = 30\ \Omega$, $V = 12$ V

$$I_1 = \frac{V}{R_1} = \frac{12}{5} = 2.4\ A$$

$$I_2 = \frac{V}{R_2} = \frac{12}{10} = 1.2\ A$$

$$I_3 = \frac{V}{R_3} = \frac{12}{30} = 0.4\ A$$

$$I = I_1 + I_2 + I_3 = 2.4 + 1.2 + 0.4 = 4.0\ A$$

$$\frac{1}{R_P} = \frac{1}{R_1} + \frac{1}{R_2} + \frac{1}{R_3} = \frac{1}{5} + \frac{1}{10} + \frac{1}{30} = \frac{6+3+1}{30} = \frac{10}{30} = \frac{1}{3}$$

Effective resistance in the circuit = 3 Ω and the current flowing through the resistances 5 Ω, 10 Ω and 30 Ω is 2.4 A, 1.2 A and 0.4 A respectively. The total current flowing through the circuit is 4 A.

Domestic electrical connections

The electricity in our homes is brought through the main conducting cable either from the electric pole or from underground cables. Usually, there are three wires in the cable. One is called the live wire which brings in the current. It has a red or brown insulation. The other wire is called neutral wire through which the current returns. It is blue or black. In India, the voltage difference between the live and neutral wires is about 220V. Both these wires are connected to the electric meter through a fuse. Through a main switch, they are connected to all the conducting wires inside the home so as to provide electricity to every room. In each separate circuit, various electrical appliances are connected between the live and neutral wires. The different appliances are connected in parallel and the potential difference across every appliance is the same. The third wire is called the earth wire and is of yellow or green colour. This is connected to a metal plate buried deep underground near the house and is for safety purposes.

Fuse wire : Fuse wire is used to protect domestic appliances. It is made of a mixture of substances and has a specific melting point. It is connected in series to the electric appliances. If for some reason, the current in the circuit increases excessively, the fuse wire gets heated up and melts. The circuit gets broken and the flow of current stops, thus protecting the appliance. This wire is fitted in a groove in a body of porcelain - like non-conducting material. For domestic use, fuse wires with upper limits of 1 A, 2 A, 3 A, 4 A, 5 A and 10 A are used.

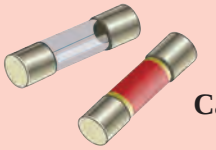

Cartridge fuse

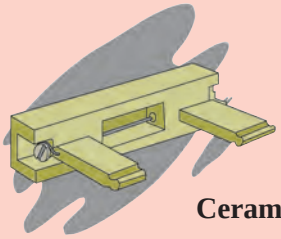

Ceramic fuse

Precautions to be taken while using electricity

1. Electric switches and sockets should be fitted at a height at which small children cannot reach and put pins or nails inside. Plug wires should not be pulled while removing a plug from its socket. Pull a plug.
2. Before cleaning an electrical appliance it should be switched off and its plug removed from the socket.
3. One's hands should be dry while handling an electrical appliance, and, as far as possible, one should use footwear with rubber soles. As rubber is an insulator, it prevents the current from flowing through our body, thereby protecting it.
4. If a person gets an electric shock, you should not touch that person. You should switch off the main switch and if the switch is too far or you do not know where it is located, then you should remove the plug from the socket if possible. If not, then you should use a wooden pole to push the person away from the electric wire.

Exercises

1. The accompanying figure shows some electrical appliances connected in a circuit in a house. Answer the following questions.

A. By which method are the appliances connected?

B. What must be the potential difference across individual appliances?

C. Will the current passing through each appliance be the same? Justify your answer.

D. Why are the domestic appliances connected in this way?

E. If the T.V. stops working, will the other appliances also stop working? Explain your answer.

2. The following figure shows the symbols for components used in the accompanying electrical circuit. Place them at proper places and complete the circuit.

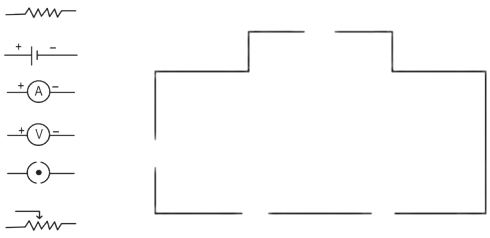

Which law can you prove with the help of the above circuit?

3. Umesh has two bulbs having resistances of 15 Ω and 30 Ω. He wants to connect them in a circuit, but if he connects them one at a time the filament gets burnt. Answer the following.

A. Which method should he use to connect the bulbs?

B. What are the characteristics of this way of connecting the bulbs depending on the answer of question A above?

C. What will be the effective resistance in the above circuit?

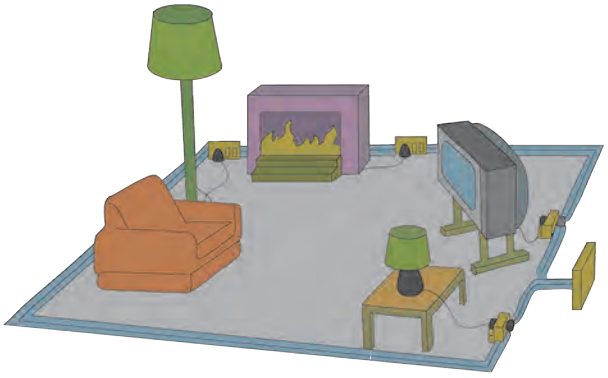

4. The following table shows current in Amperes and potential difference in Volts.

a. Find the average resistance.

b. What will be the nature of the graph between the current and potential difference? (Do not draw a graph.)

c. Which law will the graph prove? Explain the law.

V (Volts)	I (Amp)
4	9
5	11.25
6	13.5

5. Match the pairs

'A' Group	'B' Group
1. Free electrons	a. V/ R
2. Current	b. Increases the resistance in the circuit
3. Resistivity	c. Weakly attached
4. Resistances in series	d. VA/LI

6. **The resistance of a conductor of length x is r. If its area of cross-section is a, what is its resistivity? What is its unit?**

7. **Resistances R_1, R_2, R_3 and R_4 are connected as shown in the figure. S1 and S2 are two keys. Discuss the current flowing in the circuit in the following cases.**

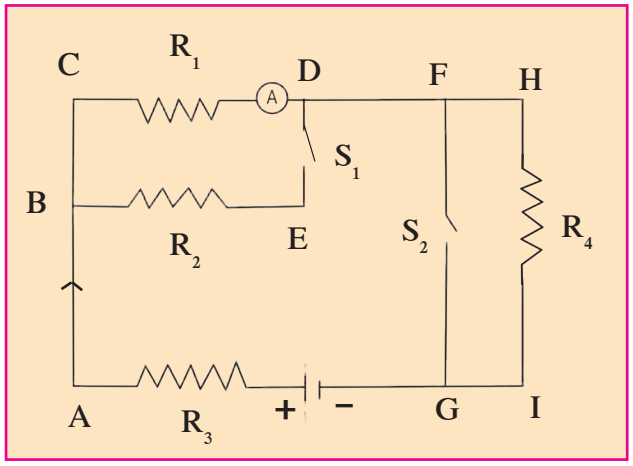

a. Both S_1 and S_2 are closed.

b. Both S_1 and S_2 are open.

c. S_1 is closed but S_2 is open.

8. **Three resistances x_1, x_2 and x_3 are connected in a circuit in different ways. x is the effective resistance. The properties observed for these different ways of connecting x_1, x_2 and x_3 are given below. Write the way in which they are connected in each case. (I-current, V-potential difference, x-effective resistance)**

a. Current I flows through x_1, x_2 and x_3

b. x is larger than x_1, x_2 and x_3

c. x is smaller than x_1, x_2 and x_3

d. The potential difference across x_1, x_2 and x_3 is the same

e. $x = x_1 + x_2 + x_3$

f. $x = \dfrac{1}{\dfrac{1}{x_1} + \dfrac{1}{x_2} + \dfrac{1}{x_3}}$

9. **Solve the following problems.**

A. The resistance of a 1m long nichrome wire is 6 Ω. If we reduce the length of the wire to 70 cm. what will its resistance be?

(Answer : 4.2 Ω)

B. When two resistors are connected in series, their effective resistance is 80 Ω. When they are connected in parallel, their effective resistance is 20 Ω. What are the values of the two resistances?

(Answer : 40 Ω , 40 Ω)

C. If a charge of 420 C flows through a conducting wire in 5 minutes what is the value of the current?

(Answer : 1.4 A)

Project :

Ask an electrician to explain to you the electrical wiring in your house and other related important points. Take care to understand them well, and explain them to others also.

6SXI1A