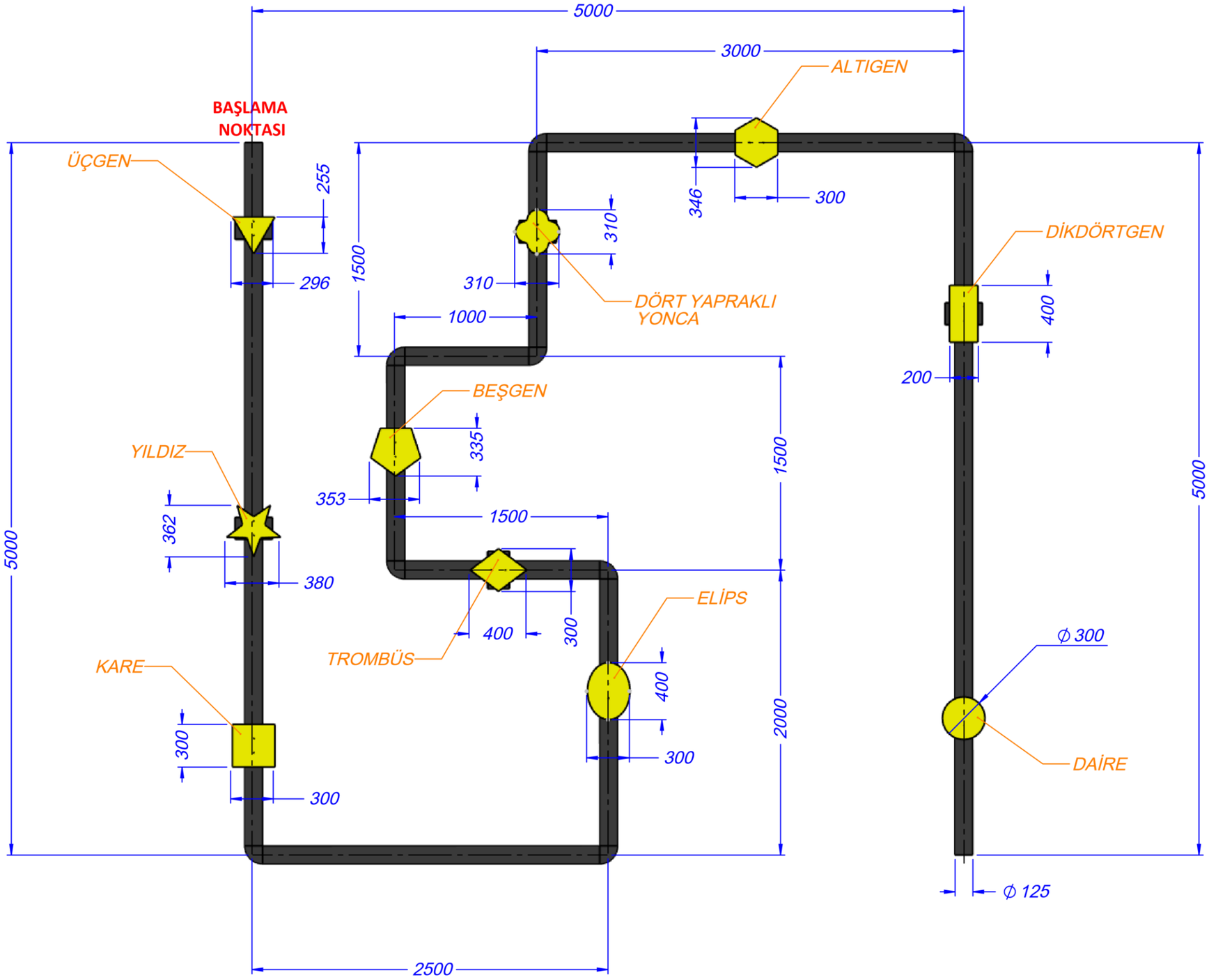

NOT:

PVC BORU (Ø125mm),
RENK:SİYAH

ANOMALİ MALZEMESİ: 1,5mm ST37 SAC
RENK: RAL1023 SARI

Unless Otherwise Specified All Dimensions in Milimeters (mm) Thread Standart ISO 261 applies Break All Sharp Corners Surface Finish According To ISO 1302

Default Tolerances

Length	± 0,1		± 0,2	± 0,3	± 0,5	± 0,8	± 1.2	± 2
Radius/Chamfer	± 0,2	± 0,5	± 1					
Angle	± 1		± 0,5	± 0,3	± 0,2	± 0,1		
From	0,5	3	6	30	120	400	1000	2000
Up To	3	6	30	120	400	1000	2000	4000

MATERIAL :		COATING:				
DESIGN			SCALE	REV	SHEET	SIZE
DRAWING				A	1	A3
APPROVE						
LAST SAVED			DO NOT SCALE DRAWING			

TITLE SU ALTI KABLOLARI TAKİBİ VE ANOMALİ TESPİTİ

DWG NO. TK24-A1-001-005-00

WEIGHT:

SW CAD