NPN Epitaxial Silicon Transistor

BC546 / BC547 / BC548 / BC549 / BC550

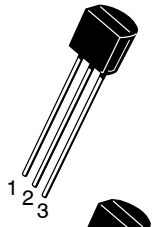

TO−92
CASE 135AN

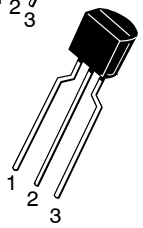

TO−92
CASE 135AR

1. Collector 2. Base 3. Emitter

Features

- Switching and Amplifier
- High−Voltage: BC546, V_{CEO} = 65 V
- Low−Noise: BC549, BC550
- Complement to BC556, BC557, BC558, BC559, and BC560
- These are Pb−Free Devices

ABSOLUTE MAXIMUM RATINGS

Parameter	Symbol	Value	Unit
Collector−Base Voltage BC546 BC547 / BC550 BC548 / BC549	V_{CBO}	 80 50 30	V
Collector−Emitter Voltage BC546 BC547 / BC550 BC548 / BC549	V_{CEO}	 65 45 30	V
Emitter−Base Voltage BC546 / BC547 BC548 / BC549 / BC550	V_{EBO}	 6 5	V
Collector Current (DC)	I_C	100	mA
Collector Power Dissipation	P_C	500	mW
Junction Temperature	T_J	150	°C
Storage Temperature Range	T_{STG}	−65 to +150	°C

Stresses exceeding those listed in the Maximum Ratings table may damage the device. If any of these limits are exceeded, device functionality should not be assumed, damage may occur and reliability may be affected.

MARKING DIAGRAM

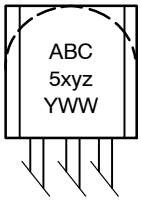

BC5xyz = Device Code
x = 4 or 5
y = 6, 7, 8, 9 or 0
z = A, B, C
A = Assembly Location
Y = Year
WW = Work Week

ORDERING INFORMATION

See detailed ordering and shipping information on page 4 of this data sheet.

NOTE: Some of the devices on this data sheet have been **DISCONTINUED**. Please refer to the table on page 4.

© Semiconductor Components Industries, LLC, 2002

ELECTRICAL CHARACTERISTICS (T_C = 25°C unless otherwise noted)

Symbol	Parameter		Test Condition	Min.	Typ.	Max.	Units
I_{CBO}	Collector Cut−off Current		V_{CB} = 30 V, I_E = 0			15	nA
h_{FE}	DC Current Gain		V_{CE} = 5 V, I_C = 2 mA	110		800	
V_{CE}(sat)	Collector−Emitter Saturation Voltage		I_C = 10 mA, I_B = 0.5 mA		90	250	mV
			I_C = 100 mA, I_B = 5 mA		250	600	
V_{BE}(sat)	Base−Emitter Saturation Voltage		I_C = 10 mA, I_B = 0.5 mA		700		mV
			I_C = 100 mA, I_B = 5 mA		900		
V_{BE}(on)	Base−Emitter On Voltage		V_{CE} = 5 V, I_C = 2 mA	580	660	700	mV
			V_{CE} = 5 V, I_C = 10 mA			720	
f_T	Current Gain Bandwidth Product		V_{CE} = 5 V, I_C = 10 mA, f = 100 MHz		300		MHz
C_{ob}	Output Capacitance		V_{CB} = 10 V, I_E = 0, f = 1 MHz		3.5	6.0	pF
C_{ib}	Input Capacitance		V_{EB} = 0.5 V, I_C = 0, f = 1 MHz		9		pF
NF	Noise Figure	BC546 / BC547 / BC548	V_{CE} = 5 V, I_C = 200 μA, f = 1 kHz, R_G = 2 kΩ		2.0	10.0	dB
		BC549 / BC550			1.2	4.0	
		BC549	V_{CE} = 5 V, I_C = 200 μA, R_G = 2 kΩ, f = 30 to 15000 MHz		1.4	4.0	
		BC550			1.4	3.0	

Product parametric performance is indicated in the Electrical Characteristics for the listed test conditions, unless otherwise noted. Product performance may not be indicated by the Electrical Characteristics if operated under different conditions.

h_{FE} CLASSIFICATION

Classification	A	B	C
h_{FE}	110 ~ 220	200 ~ 450	420 ~ 800

Share Feedback
Your Opinion Matters

TYPICAL PERFORMANCE CHARACTERISTICS

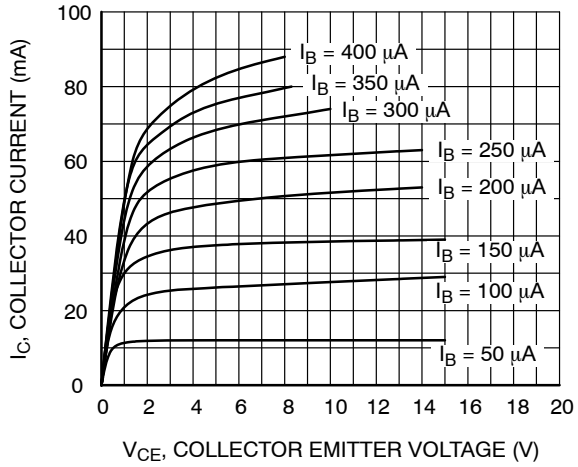

Figure 1. Static Characteristic

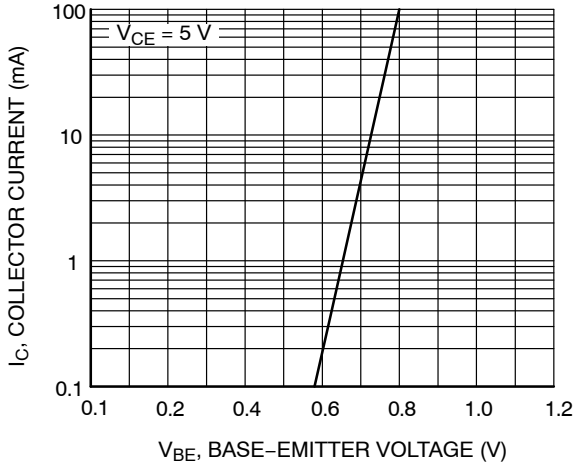

Figure 2. Transfer Characteristics

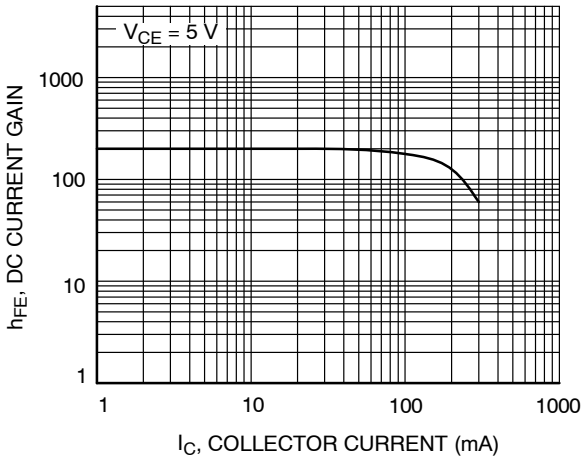

Figure 3. DC Current Gain

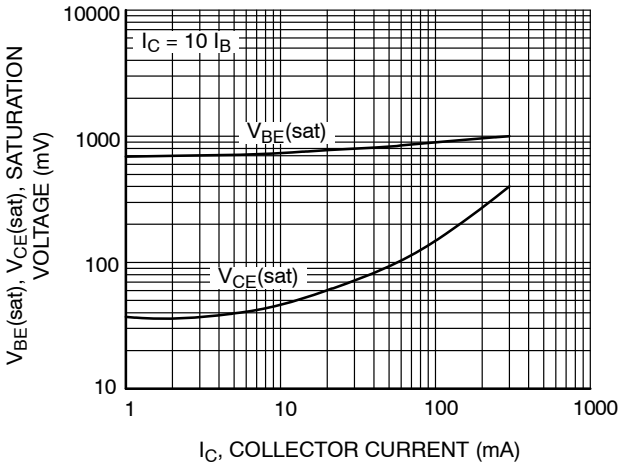

Figure 4. Base−Emitter Saturation Voltage and Collector−Emitter Saturation Voltage

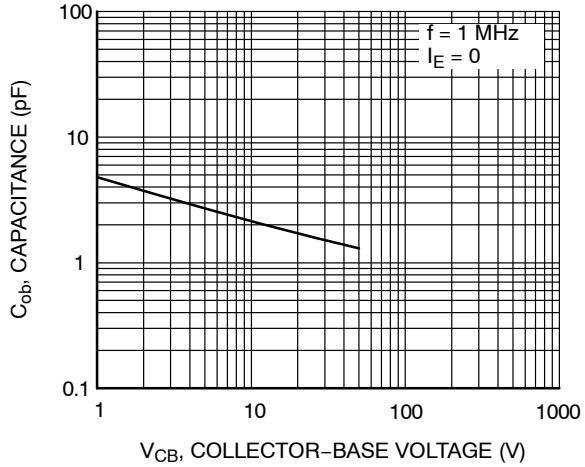

Figure 5. Output Capacitance

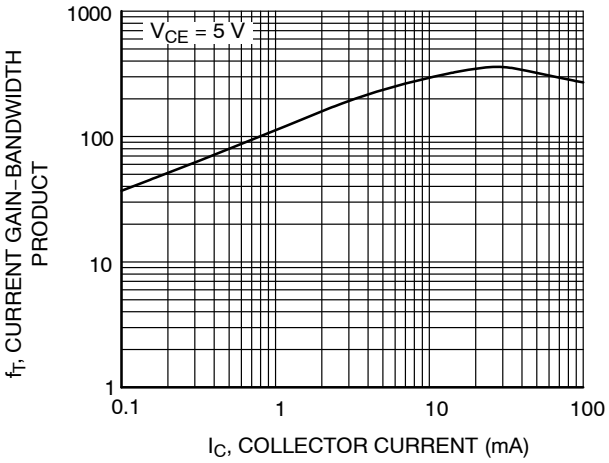

Figure 6. Current Gain Bandwidth Product

Share Feedback
Your Opinion Matters

ORDERING INFORMATION

Part Number	Marking	Package	Packing Method†
BC546ABU	BC546A	TO−92−3 (Pb−Free)	10000 / Bulk Bag
BC546CTA	BC546C	TO−92−3 (Pb−Free)	2000 / Ammo Pack
BC547B	BC547B	TO−92−3 (Pb−Free)	10000 / Bulk Bag
BC547BBU	BC547B	TO−92−3 (Pb−Free)	10000 / Bulk Bag
BC547BTF	BC547B	TO−92−3 (Pb−Free)	2000 / Tape & Reel
BC547CBU	BC547C	TO−92−3 (Pb−Free)	10000 / Bulk Bag
BC547CTA	BC547C	TO−92−3 (Pb−Free)	2000 / Ammo Pack
BC549BTA	BC549B	TO−92−3 (Pb−Free)	2000 / Ammo Pack
BC549CTA	BC549C	TO−92−3 (Pb−Free)	2000 / Ammo Pack
BC550CBU	BC550C	TO−92−3 (Pb−Free)	10000 / Bulk Bag

DISCONTINUED (Note 1)

BC546ATA	BC546A	TO−92−3 (Pb−Free)	2000 / Ammo Pack
BC546BTA	BC546B	TO−92−3 (Pb−Free)	2000 / Ammo Pack
BC546BTF	BC546B	TO−92−3 (Pb−Free)	2000 / Tape & Reel
BC547ATA	BC547A	TO−92−3 (Pb−Free)	2000 / Ammo Pack
BC547BTA	BC547B	TO−92−3 (Pb−Free)	2000 / Ammo Pack
BC547CTFR	BC547C	TO−92−3 (Pb−Free)	2000 / Tape & Reel
BC548BU	BC548	TO−92−3 (Pb−Free)	10000 / Bulk Bag
BC548BTA	BC548B	TO−92−3 (Pb−Free)	2000 / Ammo Pack
BC548CTA	BC548C	TO−92−3 (Pb−Free)	2000 / Ammo Pack
BC549BTF	BC549B	TO−92−3 (Pb−Free)	2000 / Tape & Reel
BC550CTA	BC550C	TO−92−3 (Pb−Free)	2000 / Ammo Pack

†For information on tape and reel specifications, including part orientation and tape sizes, please refer to our Tape and Reel Packaging Specifications Brochure, BRD8011/D.

1. **DISCONTINUED:** These devices are not recommended for new design. Please contact your **onsemi** representative for information. The most current information on these devices may be available on www.onsemi.com.

Share Feedback
Your Opinion Matters

TO−92 3 4.825x4.76
CASE 135AN
ISSUE O

DATE 31 JUL 2016

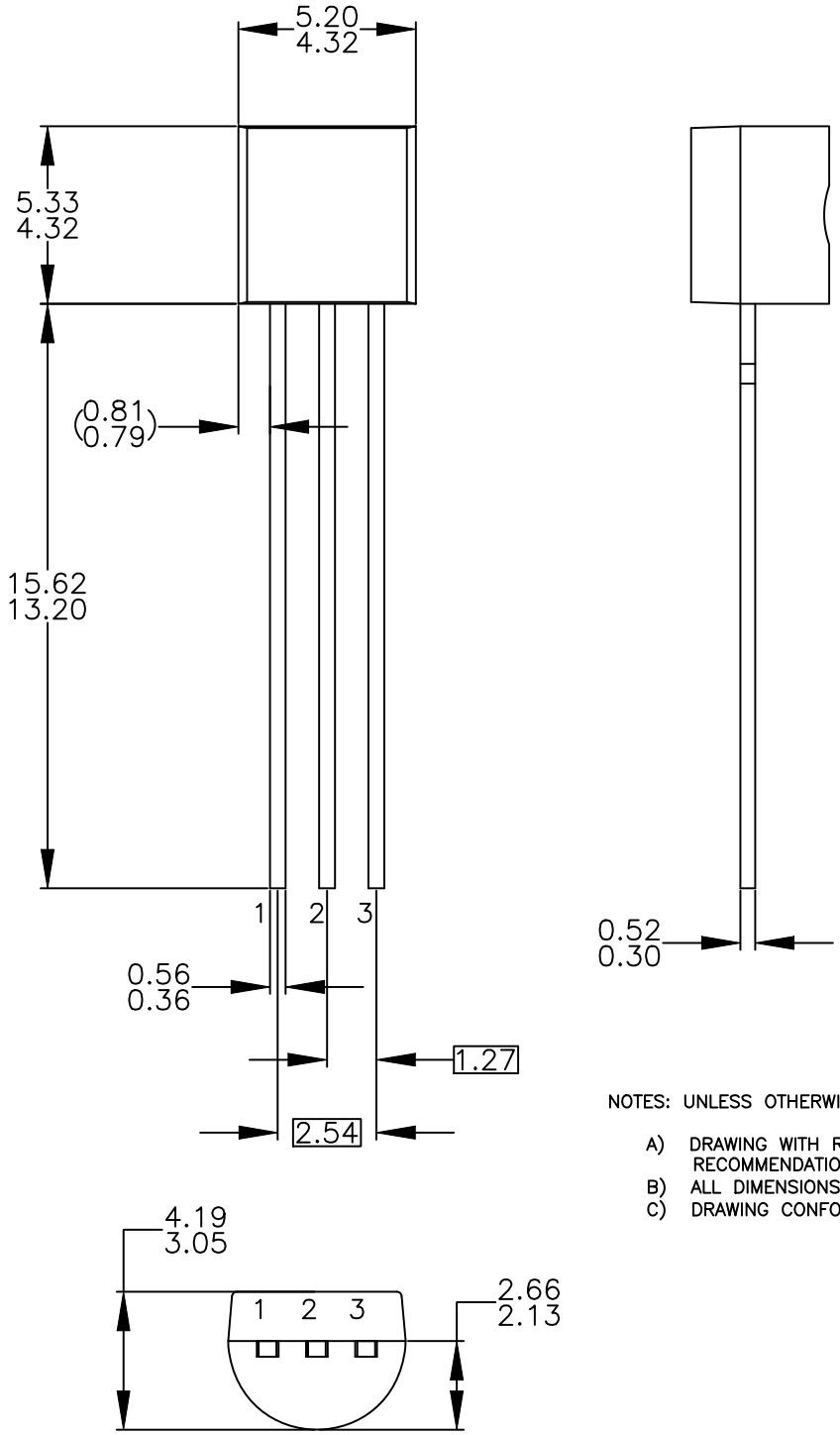

NOTES: UNLESS OTHERWISE SPECIFIED

A) DRAWING WITH REFERENCE TO JEDEC TO−92 RECOMMENDATIONS.
B) ALL DIMENSIONS ARE IN MILLIMETERS.
C) DRAWING CONFORMS TO ASME Y14.5M−2009.

DOCUMENT NUMBER:	**98AON13880G**	Electronic versions are uncontrolled except when accessed directly from the Document Repository. Printed versions are uncontrolled except when stamped "CONTROLLED COPY" in red.
DESCRIPTION:	**TO−92 3 4.825X4.76**	**PAGE 1 OF 1**

onsemi and onsemi are trademarks of Semiconductor Components Industries, LLC dba **onsemi** or its subsidiaries in the United States and/or other countries. **onsemi** reserves the right to make changes without further notice to any products herein. **onsemi** makes no warranty, representation or guarantee regarding the suitability of its products for any particular purpose, nor does **onsemi** assume any liability arising out of the application or use of any product or circuit, and specifically disclaims any and all liability, including without limitation special, consequential or incidental damages. **onsemi** does not convey any license under its patent rights nor the rights of others.

TO−92 3 4.83x4.76 LEADFORMED
CASE 135AR
ISSUE O

DATE 30 SEP 2016

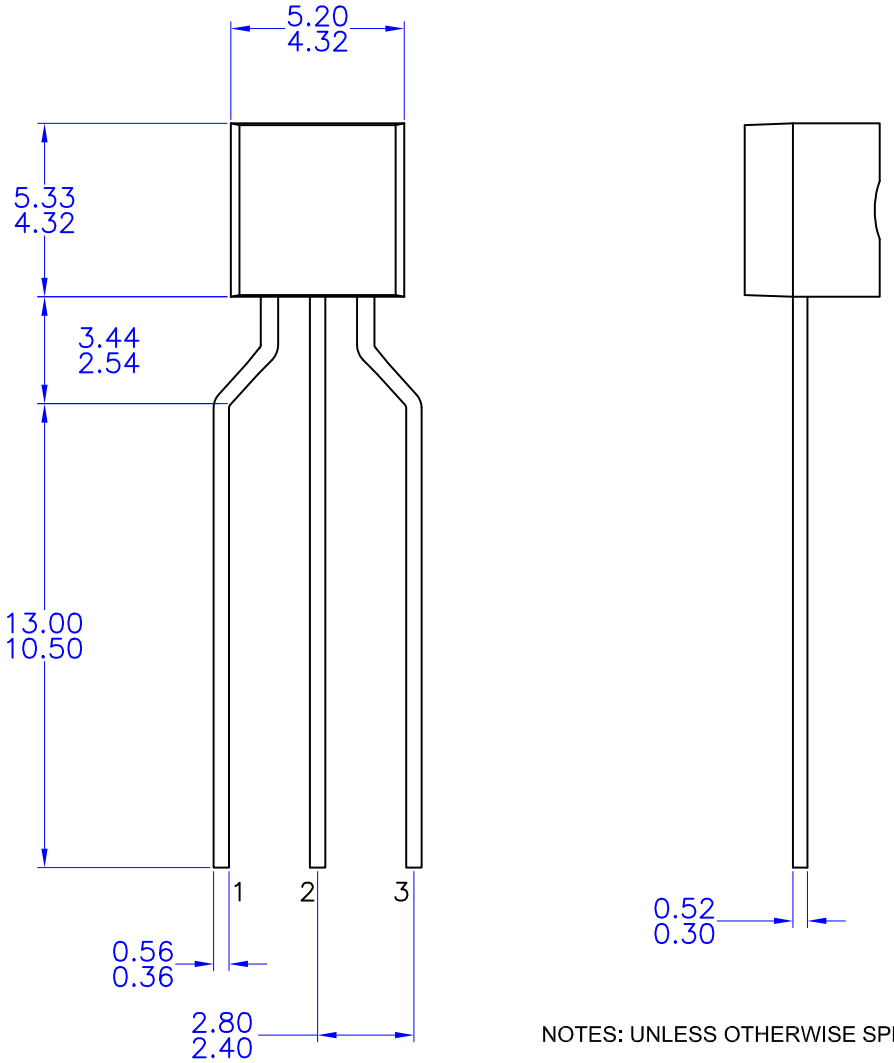

NOTES: UNLESS OTHERWISE SPECIFIED

A) DRAWING WITH REFERENCE TO JEDEC TO-92 RECOMMENDATIONS.
B) ALL DIMENSIONS ARE IN MILLIMETERS.
C) DRAWING CONFORMS TO ASME Y14.5M-1994

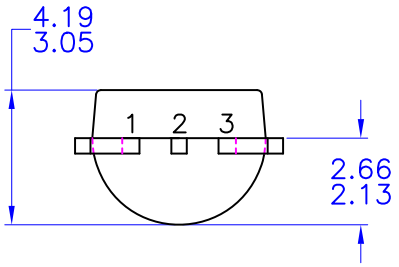

DOCUMENT NUMBER:	**98AON13879G**	Electronic versions are uncontrolled except when accessed directly from the Document Repository. Printed versions are uncontrolled except when stamped "CONTROLLED COPY" in red.
DESCRIPTION:	**TO−92 3 4.83X4.76 LEADFORMED**	**PAGE 1 OF 1**

onsemi and onsemi are trademarks of Semiconductor Components Industries, LLC dba **onsemi** or its subsidiaries in the United States and/or other countries. **onsemi** reserves the right to make changes without further notice to any products herein. **onsemi** makes no warranty, representation or guarantee regarding the suitability of its products for any particular purpose, nor does **onsemi** assume any liability arising out of the application or use of any product or circuit, and specifically disclaims any and all liability, including without limitation special, consequential or incidental damages. **onsemi** does not convey any license under its patent rights nor the rights of others.

onsemi, onsemi, and other names, marks, and brands are registered and/or common law trademarks of Semiconductor Components Industries, LLC dba "**onsemi**" or its affiliates and/or subsidiaries in the United States and/or other countries. **onsemi** owns the rights to a number of patents, trademarks, copyrights, trade secrets, and other intellectual property. A listing of **onsemi**'s product/patent coverage may be accessed at www.onsemi.com/site/pdf/Patent−Marking.pdf. **onsemi** reserves the right to make changes at any time to any products or information herein, without notice. The information herein is provided "as−is" and **onsemi** makes no warranty, representation or guarantee regarding the accuracy of the information, product features, availability, functionality, or suitability of its products for any particular purpose, nor does **onsemi** assume any liability arising out of the application or use of any product or circuit, and specifically disclaims any and all liability, including without limitation special, consequential or incidental damages. Buyer is responsible for its products and applications using **onsemi** products, including compliance with all laws, regulations and safety requirements or standards, regardless of any support or applications information provided by **onsemi**. "Typical" parameters which may be provided in **onsemi** data sheets and/or specifications can and do vary in different applications and actual performance may vary over time. All operating parameters, including "Typicals" must be validated for each customer application by customer's technical experts. **onsemi** does not convey any license under any of its intellectual property rights nor the rights of others. **onsemi** products are not designed, intended, or authorized for use as a critical component in life support systems or any FDA Class 3 medical devices or medical devices with a same or similar classification in a foreign jurisdiction or any devices intended for implantation in the human body. Should Buyer purchase or use **onsemi** products for any such unintended or unauthorized application, Buyer shall indemnify and hold **onsemi** and its officers, employees, subsidiaries, affiliates, and distributors harmless against all claims, costs, damages, and expenses, and reasonable attorney fees arising out of, directly or indirectly, any claim of personal injury or death associated with such unintended or unauthorized use, even if such claim alleges that **onsemi** was negligent regarding the design or manufacture of the part. **onsemi** is an Equal Opportunity/Affirmative Action Employer. This literature is subject to all applicable copyright laws and is not for resale in any manner.

ADDITIONAL INFORMATION

TECHNICAL PUBLICATIONS:
Technical Library: www.onsemi.com/design/resources/technical−documentation
onsemi Website: www.onsemi.com

ONLINE SUPPORT: www.onsemi.com/support
For additional information, please contact your local Sales Representative at
www.onsemi.com/support/sales