The Standard C++ Library Modifying containers

Version 1: Dr. Ofir Pele
Version 2: Dr. Erel Segal-Halevi

Iterators & Sequence Containers

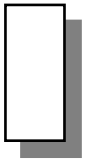

```
SeqContainerName<...> c;
SeqContainerName<...>::iterator i,j;
```

- `c.insert(i,x)` – inserts `x` before `i`
- `c.insert(i,first,last)`
  – inserts elements in `[first,last)` before `i`
- `c.erase(i)` – erases the element that `i` points to
- `c.erase(i,j)`
  – erase elements in range `[i,j)`

Iterators & Sequence Containers c++11

```
SeqContainerName<...> c;
SeqContainerName<...>::iterator i,j;
```

- `c.emplace(i,p1,...,pn)`:

Constructs and inserts before `i` an object with a constructor that gets `p1,...,pn` parameters

Iterator validity

- When working with iterators, we have to remember that their validity can change

What is wrong with this code?

```
Container<...> c;
...
for(auto i= c.begin(); i!=c.end(); ++i )
   if( f( *i ) ) { // some test
     c.erase(i);
    }
```

Iterator validity

Two cases:

- list, set, map
  - `i` is not a legal iterator

Iterator validity

Two cases:

- **list**, set, map
  - `i` is not a legal iterator

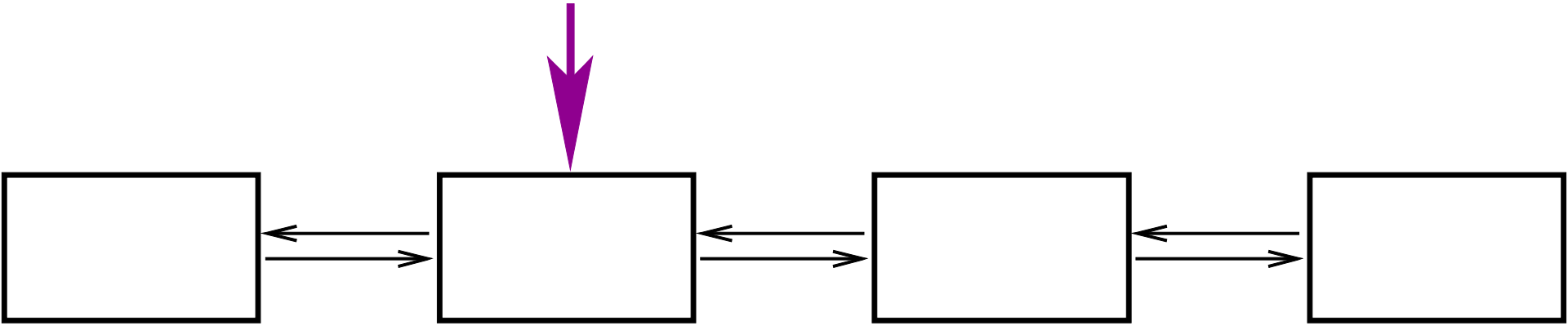

Iterator validity

Two cases:

- **list**, set, map
  - `i` is not a legal iterator

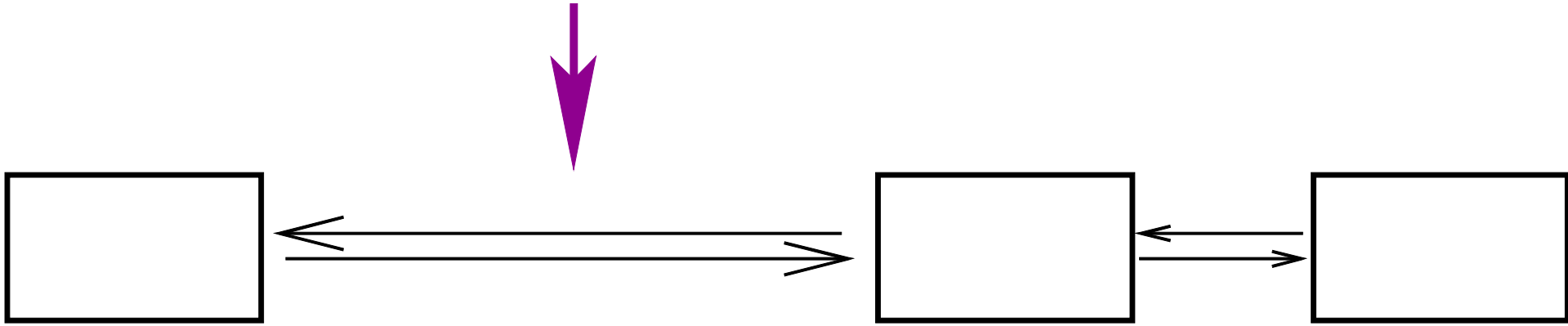

Iterator validity

Two cases:

- list, set, map
  - `i` is not a legal iterator
- **vector**
  - `i` points to the element after

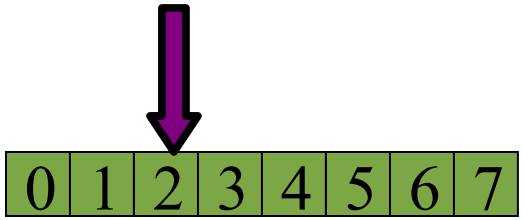

Iterator validity

Two cases:

- list, set, map
  - `i` is not a legal iterator
- **vector**
  - `i` points to the element after

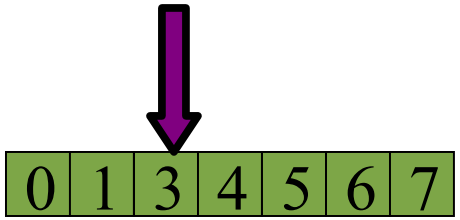

Iterator validity

Two cases:

- list, set, map
  - `i` is not a legal iterator
- **vector**
  - `i` points to the element after

In either case,

this is not what we want…

Erasing during iteration (folder 3)

```
Container<...> c;
...
for(auto i= c.begin(); i!=c.end();/*no ++i*/ )
  if( f( *i ) ) { // some test
    i = c.erase(i);
  } else {
    ++i;
  }
```