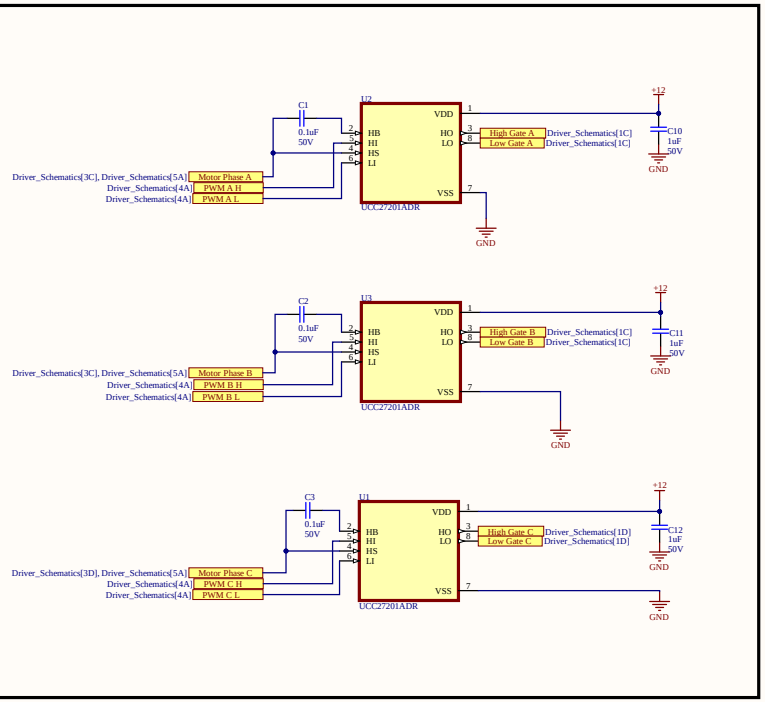

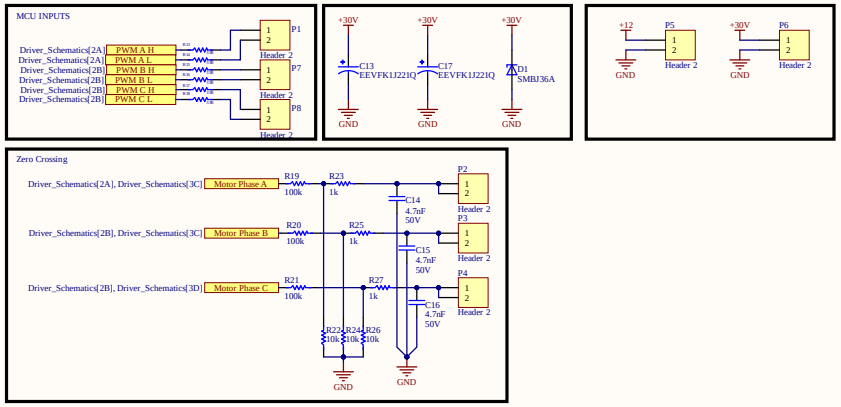

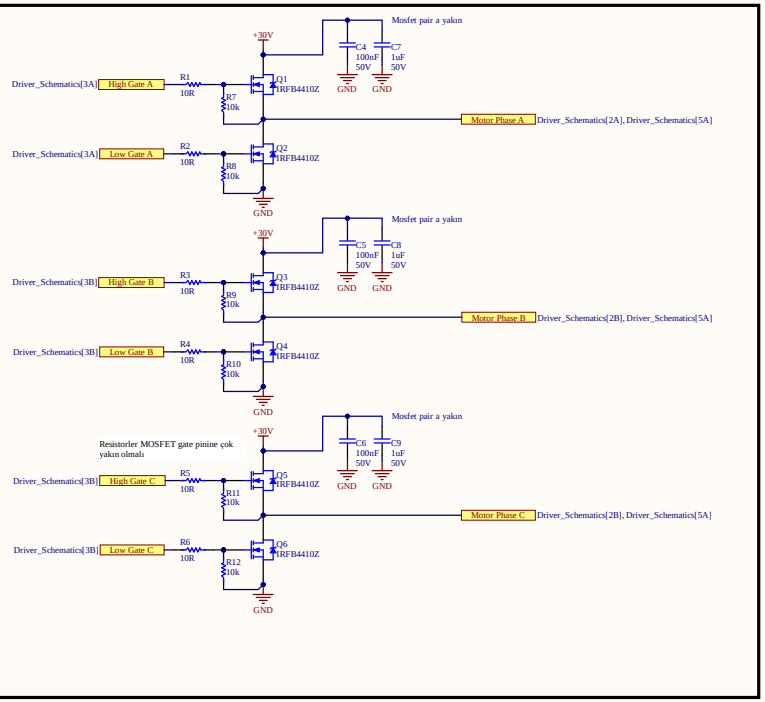

Title	30V BLDC MOTOR DRIVER	
Size A2	Number	Revision
Date: 3.06.2026	Sheet of	
File: C:\Users\...\Driver_Schematics.SchDoc	Drawn By: Önder Polat Gümüş	

Board Stack Report