Power supply

AA2380v1_Power.sch

Board digital I/O

AA2380v1_IO.sch

Analog front end

AA2380v1_AFE.sch

CPLD & logic interface

AA2380v1_LOGIC.sch

Hierarchical view
Stand alone dual channels SAR ADCs board
Open Source Versatile Analyzer
OnE Audio PRojects

OPEN HARDWARE

Sheet: /
File: AA2380V1.sch

Title: AA2380 OSVA ADC board

Size: A4	Date: 2019-02-13	**Rev: 1.0**
KiCad E.D.A.	kicad 5.0.2-bee76a070ubuntu16.04.1	Id: 1/5

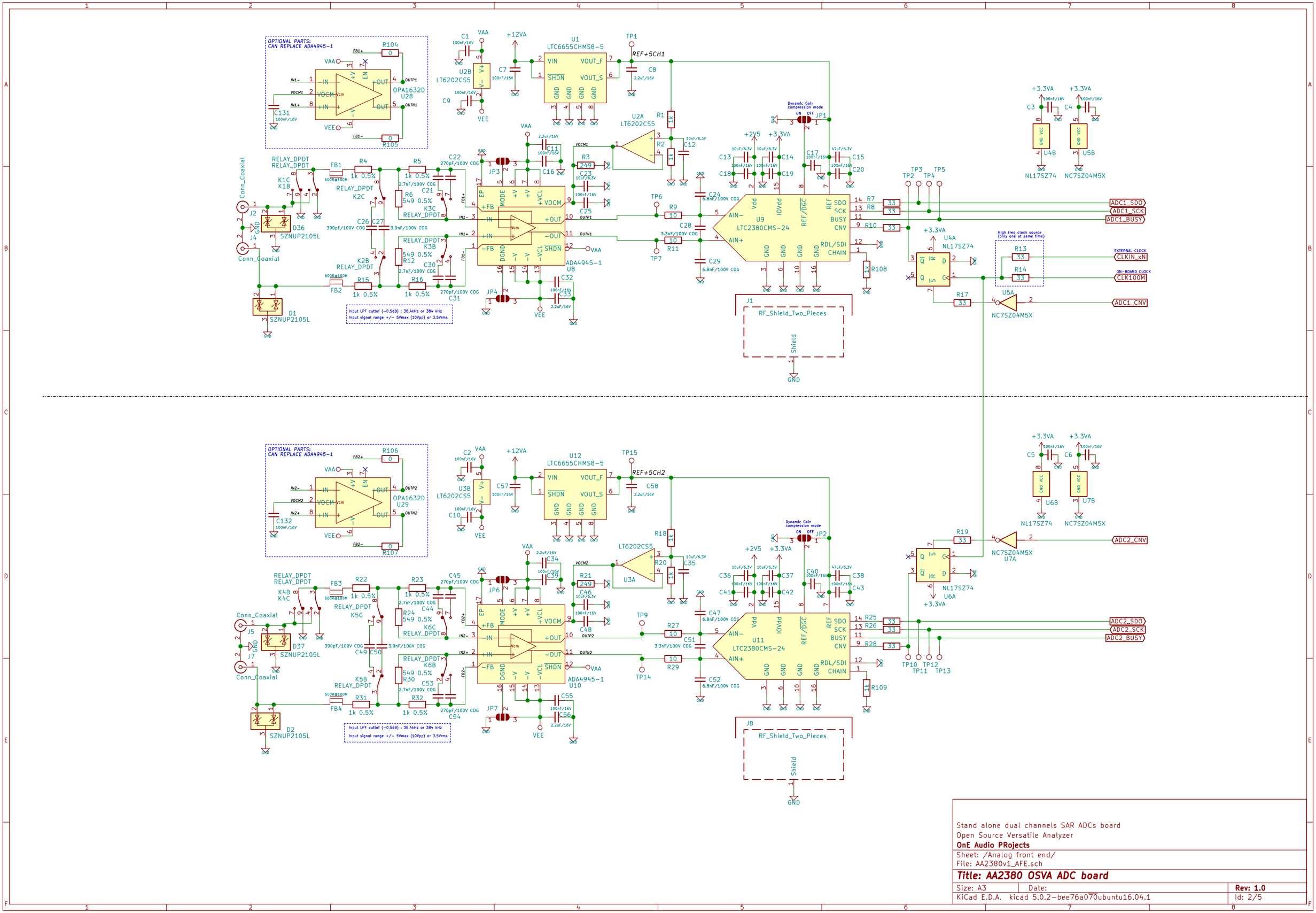

Stand alone dual channels SAR ADCs board
Open Source Versatile Analyzer
OnE Audio PRojects
Sheet: /Analog front end/
File: AA2380v1_AFE.sch

Title: AA2380 OSVA ADC board

Size: A3	Date:	**Rev: 1.0**
KiCad E.D.A. kicad 5.0.2-bee76a070ubuntu16.04.1		Id: 2/5

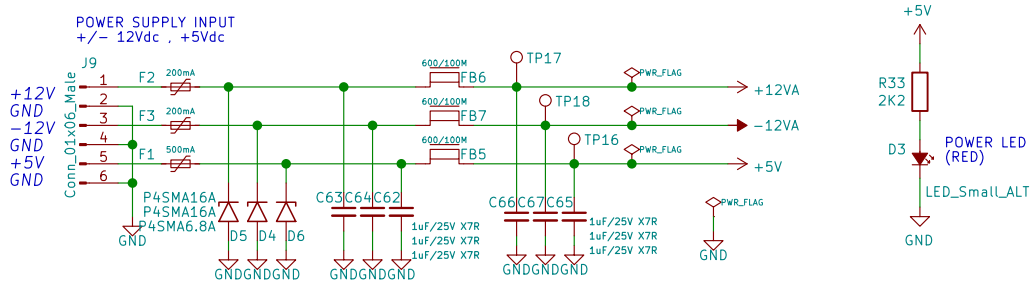

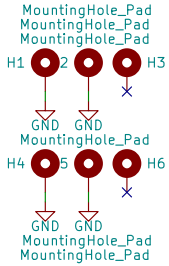

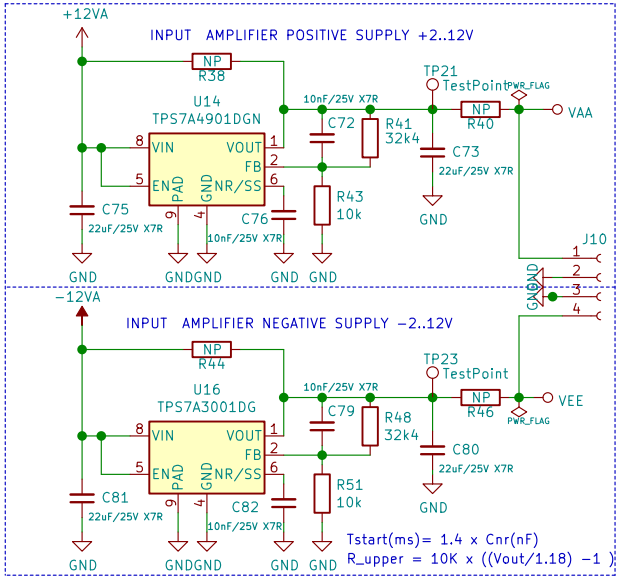

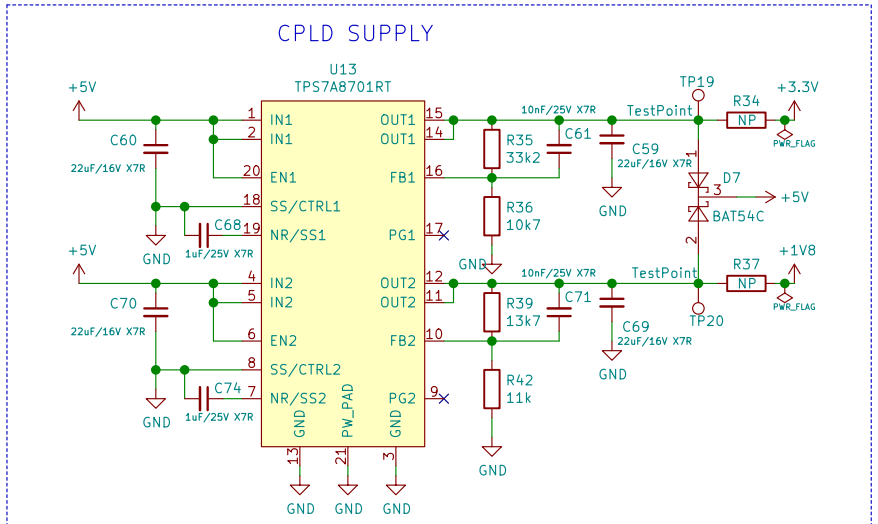

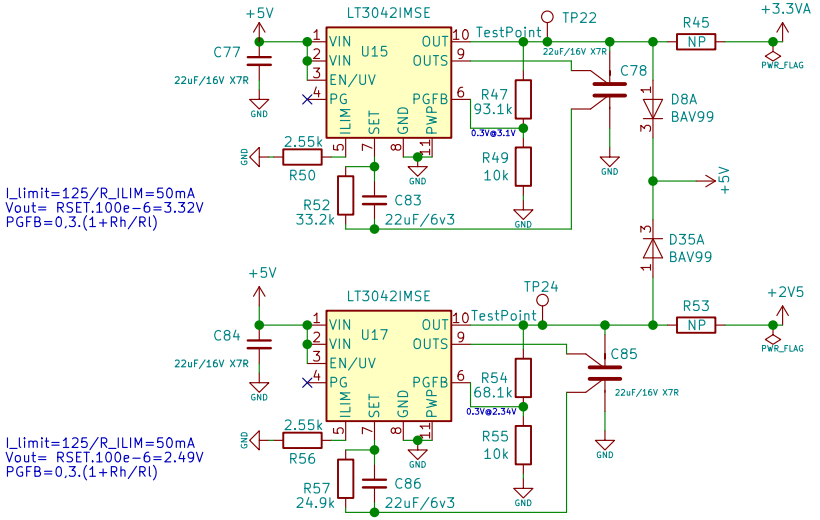

Stand alone dual channels SAR ADCs board
Open Source Versatile Analyzer
OnE Audio PRojects

Sheet: /Power supply/
File: AA2380v1_Power.sch

Title: AA2380 OSVA ADC board

Size: A4	Date:	**Rev: 1.0**
KiCad E.D.A. kicad 5.0.2−bee76a070ubuntu16.04.1		Id: 3/5

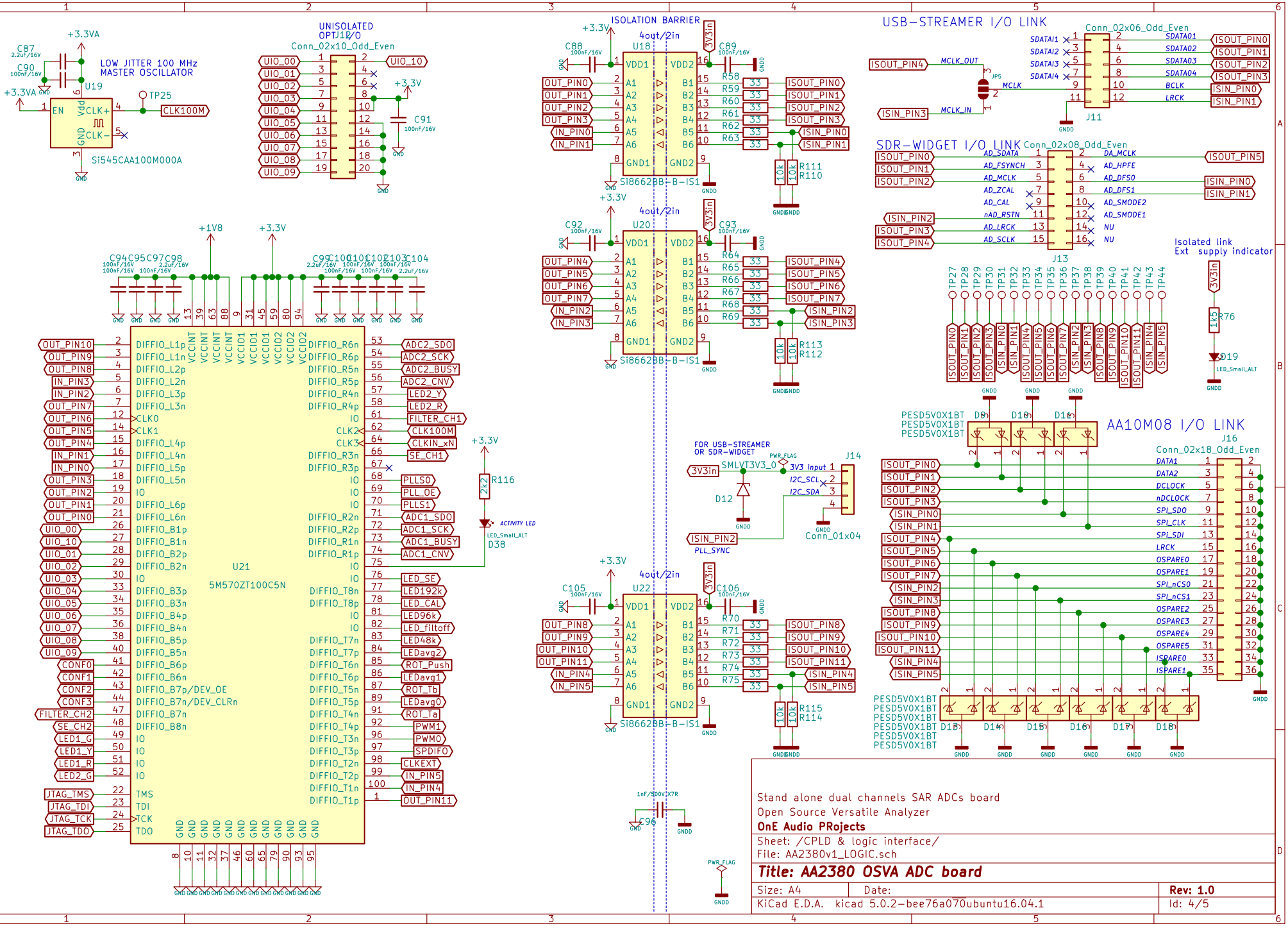
LOW JITTER 100 MHz
MASTER OSCILLATOR
Si545CAA100M000A
UNISOLATED
OPTJTAG I/O
ISOLATION BARRIER
Si8662BB-B-IS1
USB-STREAMER I/O LINK
SDR-WIDGET I/O LINK
AA10M08 I/O LINK
Isolated link
Ext supply indicator
FOR USB-STREAMER
OR SDR-WIDGET
PLL_SYNC
5M570ZT100C5N
Stand alone dual channels SAR ADCs board
Open Source Versatile Analyzer
OnE Audio PRojects
Sheet: /CPLD & logic interface/
File: AA2380v1_LOGIC.sch
Title: AA2380 OSVA ADC board
Size: A4
Date:
Rev: 1.0
KiCad E.D.A. kicad 5.0.2-bee76a070ubuntu16.04.1
Id: 4/5

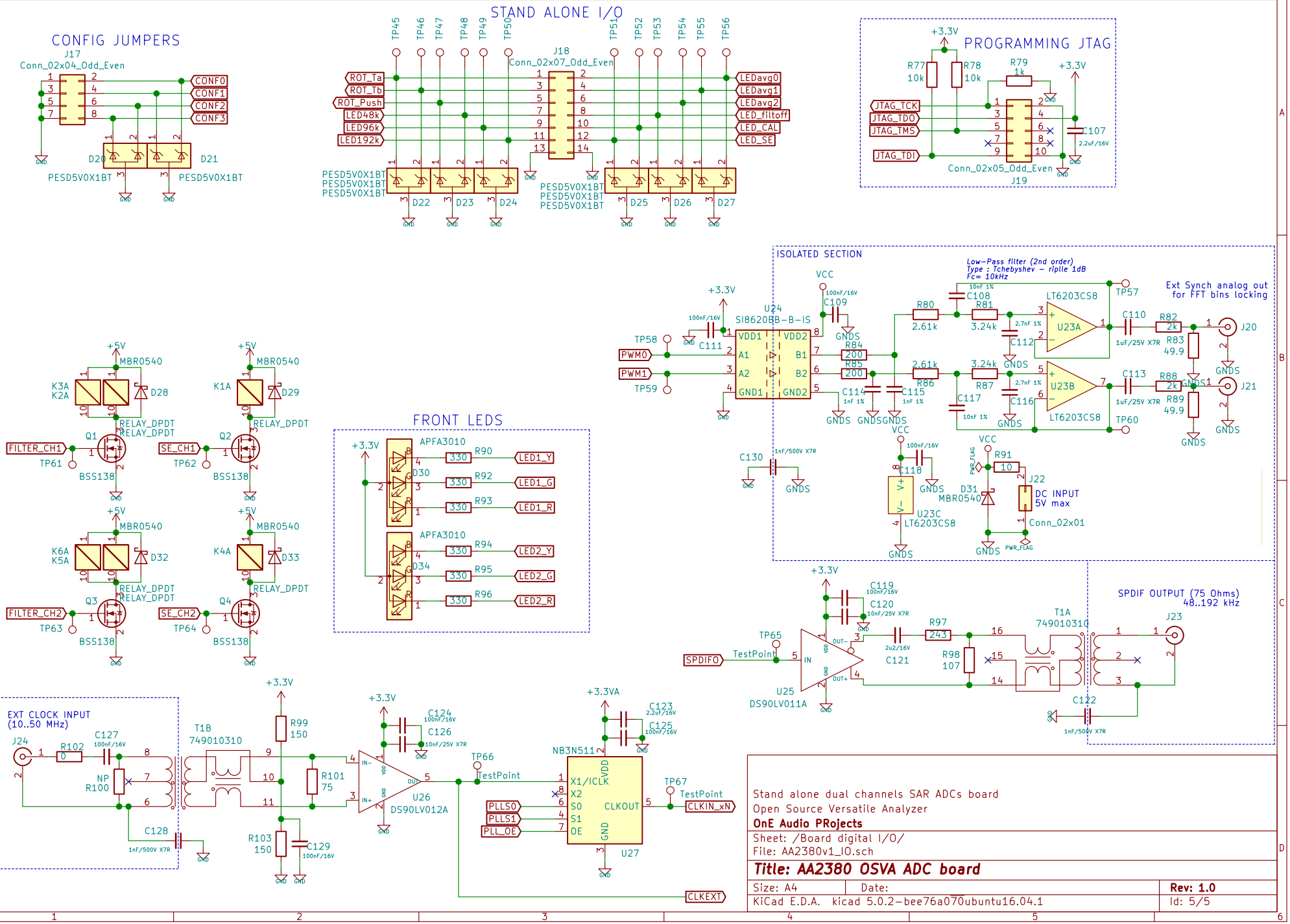
CONFIG JUMPERS
J17
Conn_02x04_Odd_Even
CONF0
CONF1
CONF2
CONF3
D20
D21
PESD5V0X1BT
STAND ALONE I/O
J18
Conn_02x07_Odd_Even
ROT_Ta
ROT_Tb
ROT_Push
LED48k
LED96k
LED192k
LEDavg0
LEDavg1
LEDavg2
LED_filtoff
LED_CAL
LED_SE
D22
D23
D24
D25
D26
D27
PROGRAMMING JTAG
JTAG_TCK
JTAG_TDO
JTAG_TMS
JTAG_TDI
Conn_02x05_Odd_Even
J19
ISOLATED SECTION
Low-Pass filter (2nd order)
Type : Tchebyshev - ripple 1dB
Fc= 10kHz
Ext Synch analog out
for FFT bins locking
SI8620BB-B-IS
LT6203CS8
PWM0
PWM1
DC INPUT
5V max
FRONT LEDS
APFA3010
LED1_Y
LED1_G
LED1_R
LED2_Y
LED2_G
LED2_R
MBR0540
BSS138
RELAY_DPDT
FILTER_CH1
SE_CH1
FILTER_CH2
SE_CH2
SPDIF OUTPUT (75 Ohms)
48..192 kHz
SPDIFO
DS90LV011A
EXT CLOCK INPUT
(10..50 MHz)
749010310
DS90LV012A
NB3N511
PLLS0
PLLS1
PLL_OE
CLKIN_xN
CLKEXT
Stand alone dual channels SAR ADCs board
Open Source Versatile Analyzer
OnE Audio PRojects
Sheet: /Board digital I/O/
File: AA2380v1_IO.sch
Title: AA2380 OSVA ADC board
Size: A4
Date:
Rev: 1.0
KiCad E.D.A. kicad 5.0.2-bee76a070ubuntu16.04.1
Id: 5/5