ASSEMBLY NO.	PART NO. 730715

THIS IS THE PROPERTY OF KIRBRE ENTERPRISES INC.
IT MUST NOT BE TRADED OR REPRODUCED IN ANY MANNER.
NOR SHALL IT BE SUBMITTED TO OUTSIDE PARTIES FOR
EXAMINATION WITHOUT OUR CONSENT. IT SHALL BE USED
ONLY AS A MEANS OF REFERENCE TO DO WORK DESIGNED
OR FURNISHED BY US. DO NOT SCALE THIS DRAWING.

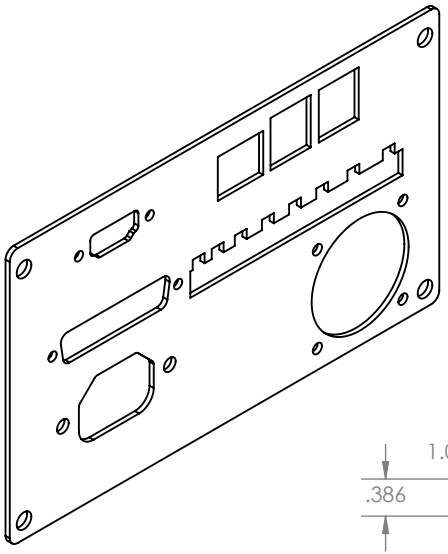

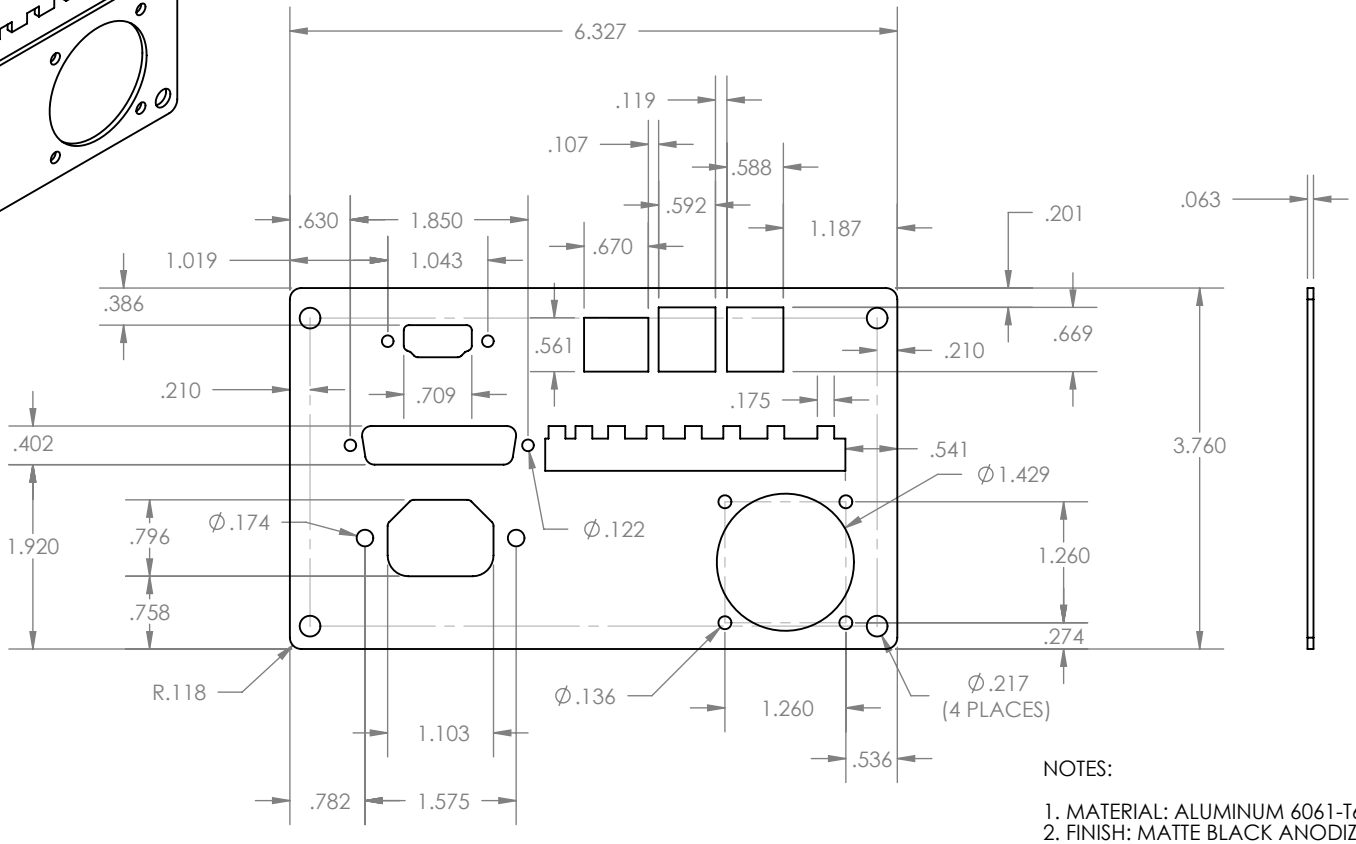

NOTES:

1. MATERIAL: ALUMINUM 6061-T6
2. FINISH: MATTE BLACK ANODIZING
3. ALL HOLES AND BORES TO BE CONCENTRIC TO +/- .005"
4. BREAK ALL EDGES
5. ALL ROUNDS AND FILLETS R.005 UNLESS NOTED
6. ⬭ = CRITICAL DIMENSION, MUST BE CHECKED
7. CAD IS MASTER. UNLESS OTHERWISE SPECIFIED TOLERANCE IS ± 0.005 TO CAD FILE PROVIDED

REV	REVISION	DATE	BY	ECN
F				
E				
D				
C				
B				
A	RELEASE FOR PROTOTYPING	06/24/20	MC	NA

TOLERANCES: UNLESS OTHERWISE SPECIFIED
DECIMALS: .X = ±.1
.XX = ±.01
.XXX = ±.005
FRACTIONAL: ± 1/64
ANGLES: ± 1/2 DEG.

UNITS: INCHES
SCALE: 1:1 SIZE: A

DATE 06/24/20
APPR.

MATERIAL SEE NOTE 1

FINISH SEE NOTE 2

DRAWN BY KIRBRE

PART DESCRIPTION
ONEFINITY CONTROLLER BACK PLATE

PART NO. 730911

PROTO/REV A

ONEFINITY
One Machine Infinite Possibilities