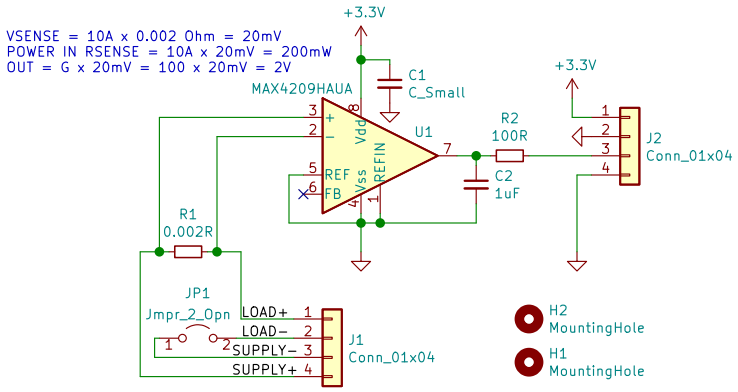

Sheet: /
File: high−side−current−sense.sch

Title:

Size: A	Date:	Rev:
KiCad E.D.A. kicad 5.1.6−c6e7f7d87ubuntu18.04.1		Id: 1/1