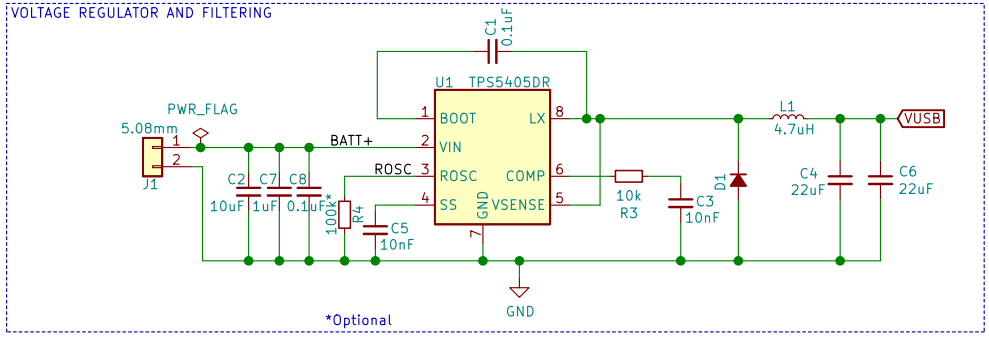

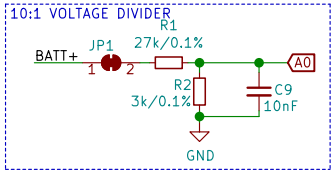

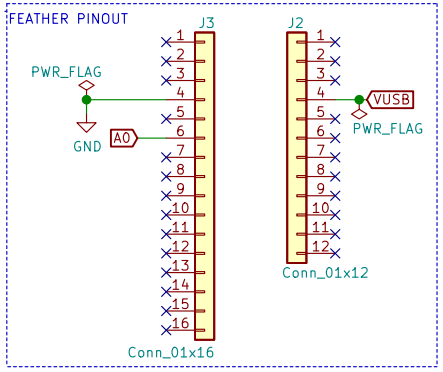

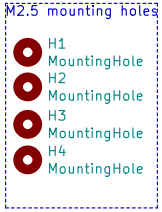

Adafruit Feather compatible 5V switching power supply

Sheet: /
File: feather-power-supply-sw-smd.sch

Title: Feather Switcher

Size: A4	Date: 2020-09-01	**Rev: 0.1**
KiCad E.D.A. kicad 5.1.6-c6e7f7d87ubuntu18.04.1		Id: 1/1