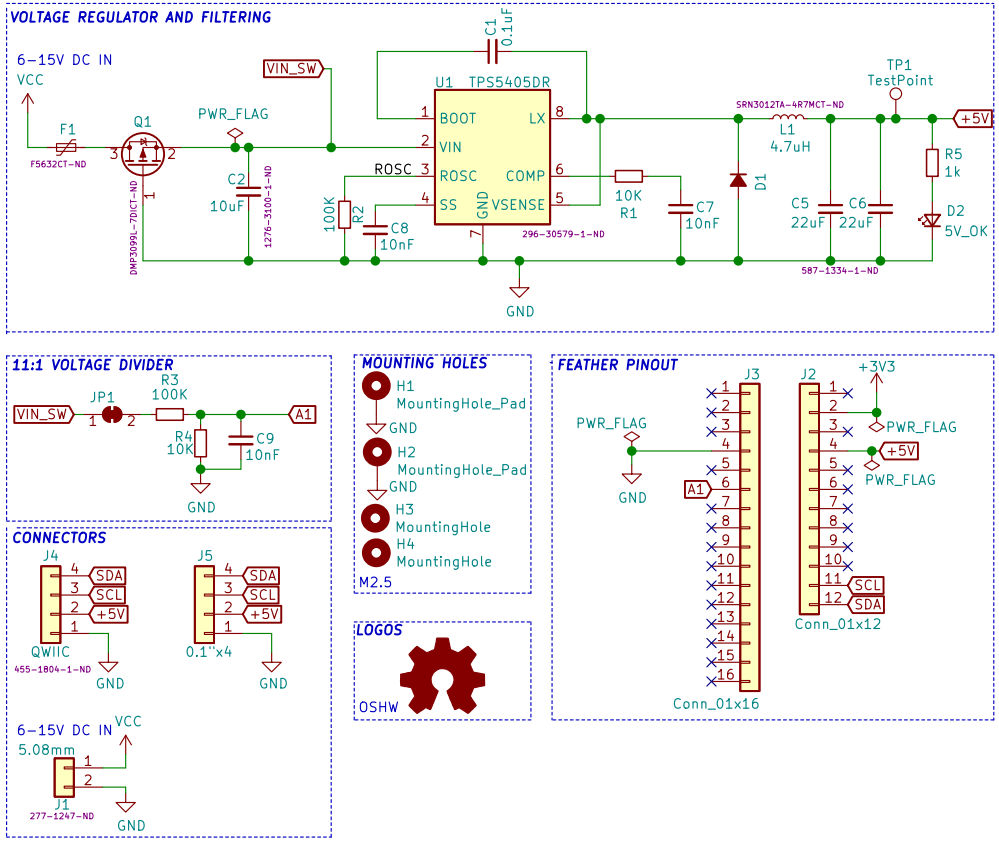

Purple text indicate DigiKey part numbers
All resistors are 1% 0603
All capacitors are 0603 X7R class unless noted. C2,C5,C6 are 1206, low esr
Adafruit FeatherWing compatible 5V switching power supply

Sheet: /
File: feather-power-supply-sw-smd.sch

Title: Feather Switcher

Size: A4	Date: 2020-09-21	**Rev: 1.1**
KiCad E.D.A. kicad 5.1.6-c6e7f7d87ubuntu18.04.1		Id: 1/1