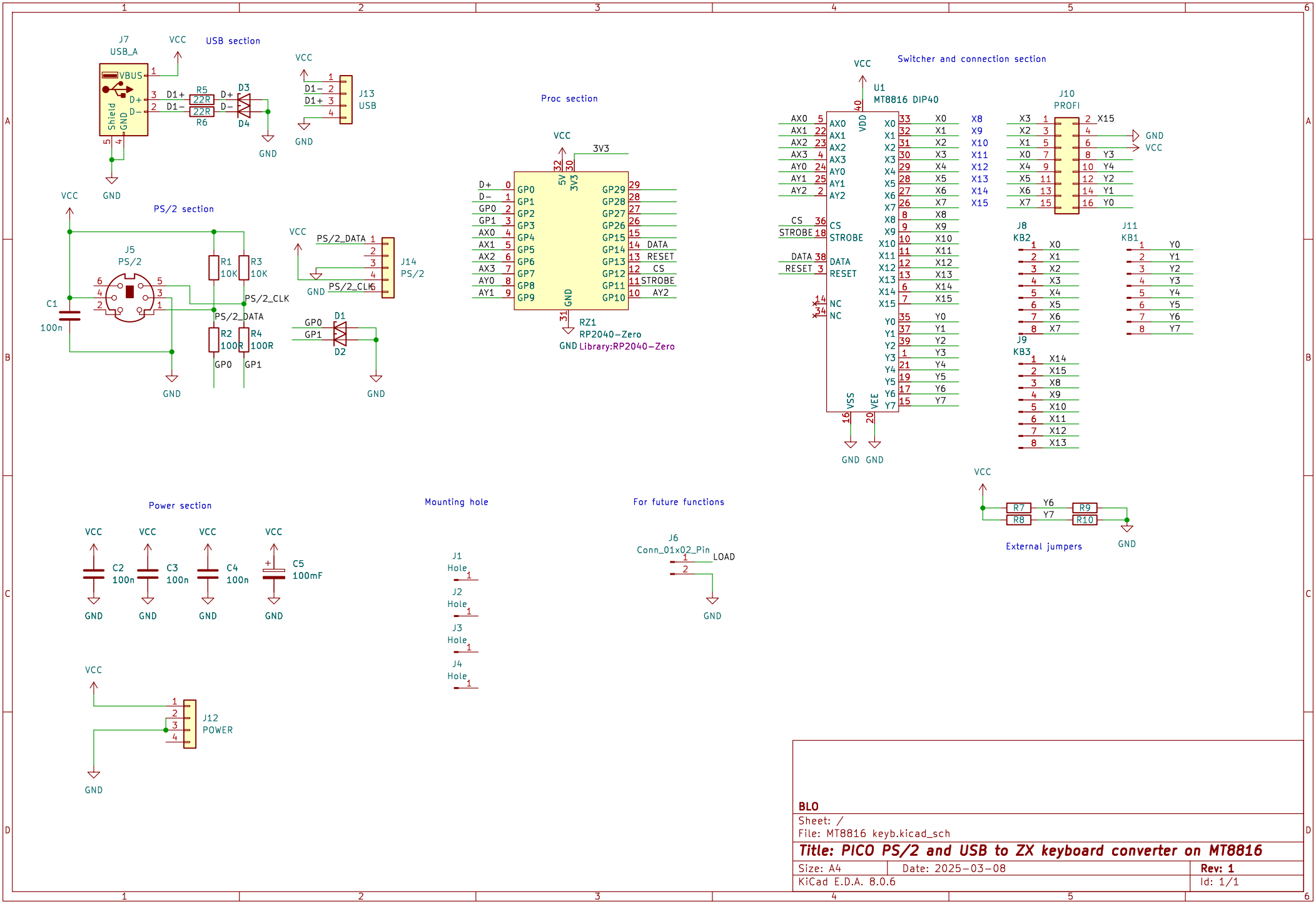

BLO

Sheet: /

File: MT8816 keyb.kicad_sch

Title: PICO PS/2 and USB to ZX keyboard converter on MT8816

Size: A4	Date: 2025−03−08	**Rev: 1**
KiCad E.D.A. 8.0.6		Id: 1/1