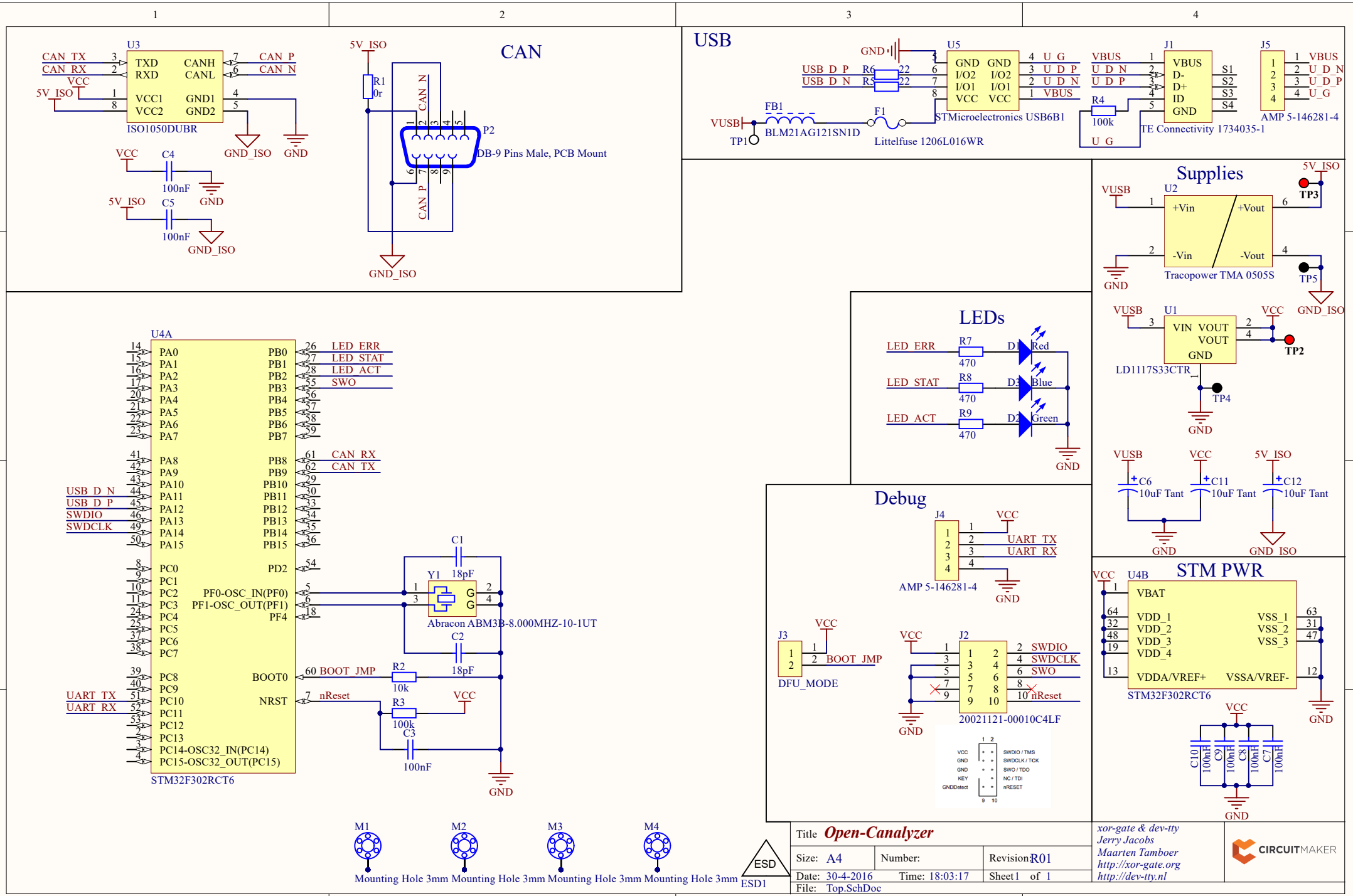
CAN
U3
ISO1050DUBR
CAN_TX
CAN_RX
CAN_P
CAN_N
TXD
RXD
CANH
CANL
VCC1
VCC2
GND1
GND2
5V_ISO
VCC
C4
100nF
C5
100nF
GND_ISO
GND
R1
0r
P2
DB-9 Pins Male, PCB Mount
USB
U5
STMicroelectronics USB6B1
GND
USB_D_P
USB_D_N
R6
R5
22
FB1
BLM21AG121SN1D
F1
Littelfuse 1206L016WR
VUSB
TP1
J1
TE Connectivity 1734035-1
VBUS
U_D_N
U_D_P
U_G
R4
100k
J5
AMP 5-146281-4
Supplies
U2
Tracopower TMA 0505S
+Vin
-Vin
+Vout
-Vout
TP3
TP5
U1
LD1117S33CTR
VIN
VOUT
TP2
TP4
C6
10uF Tant
C11
10uF Tant
C12
10uF Tant
LEDs
LED_ERR
LED_STAT
LED_ACT
R7
R8
R9
470
D1
D2
D3
Red
Blue
Green
U4A
STM32F302RCT6
PA0
PA1
PA2
PA3
PA4
PA5
PA6
PA7
PA8
PA9
PA10
PA11
PA12
PA13
PA14
PA15
PC0
PC1
PC2
PC3
PC4
PC5
PC6
PC7
PC8
PC9
PC10
PC11
PC12
PC13
PC14-OSC32_IN(PC14)
PC15-OSC32_OUT(PC15)
PB0
PB1
PB2
PB3
PB4
PB5
PB6
PB7
PB8
PB9
PB10
PB11
PB12
PB13
PB14
PB15
PD2
PF0-OSC_IN(PF0)
PF1-OSC_OUT(PF1)
PF4
BOOT0
NRST
LED_ERR
LED_STAT
LED_ACT
SWO
CAN_RX
CAN_TX
USB_D_N
USB_D_P
SWDIO
SWDCLK
UART_TX
UART_RX
BOOT_JMP
nReset
C1
18pF
Y1
Abracon ABM3B-8.000MHZ-10-1UT
C2
18pF
R2
10k
R3
100k
C3
100nF
Debug
J4
AMP 5-146281-4
J3
DFU_MODE
J2
20021121-00010C4LF
STM PWR
U4B
STM32F302RCT6
VBAT
VDD_1
VDD_2
VDD_3
VDD_4
VDDA/VREF+
VSS_1
VSS_2
VSS_3
VSSA/VREF-
C10
100nF
C9
100nF
C8
100nF
C7
100nF
M1
M2
M3
M4
Mounting Hole 3mm
ESD
ESD1
Title
Open-Canalyzer
Size: A4
Number:
Revision: R01
Date: 30-4-2016
Time: 18:03:17
Sheet 1 of 1
File: Top.SchDoc
xor-gate & dev-tty
Jerry Jacobs
Maarten Tamboer
http://xor-gate.org
http://dev-tty.nl
CIRCUITMAKER