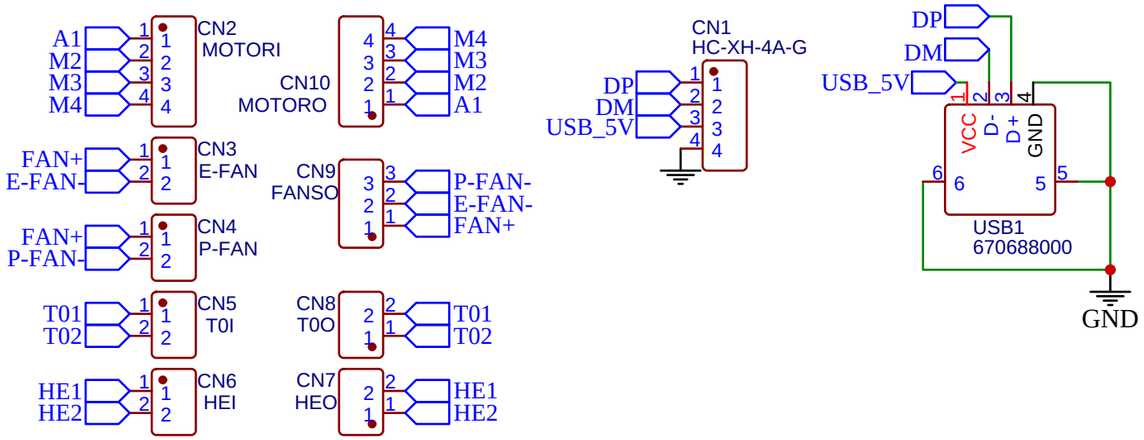

TITLE: OLSK Distribution Board		REV: 1.0
EasyEDA	Company: InMachines Ingrassia GmbH	Sheet: 1/1
	Date: 2025-20-03 Drawn By: Wilhelm Schütze	