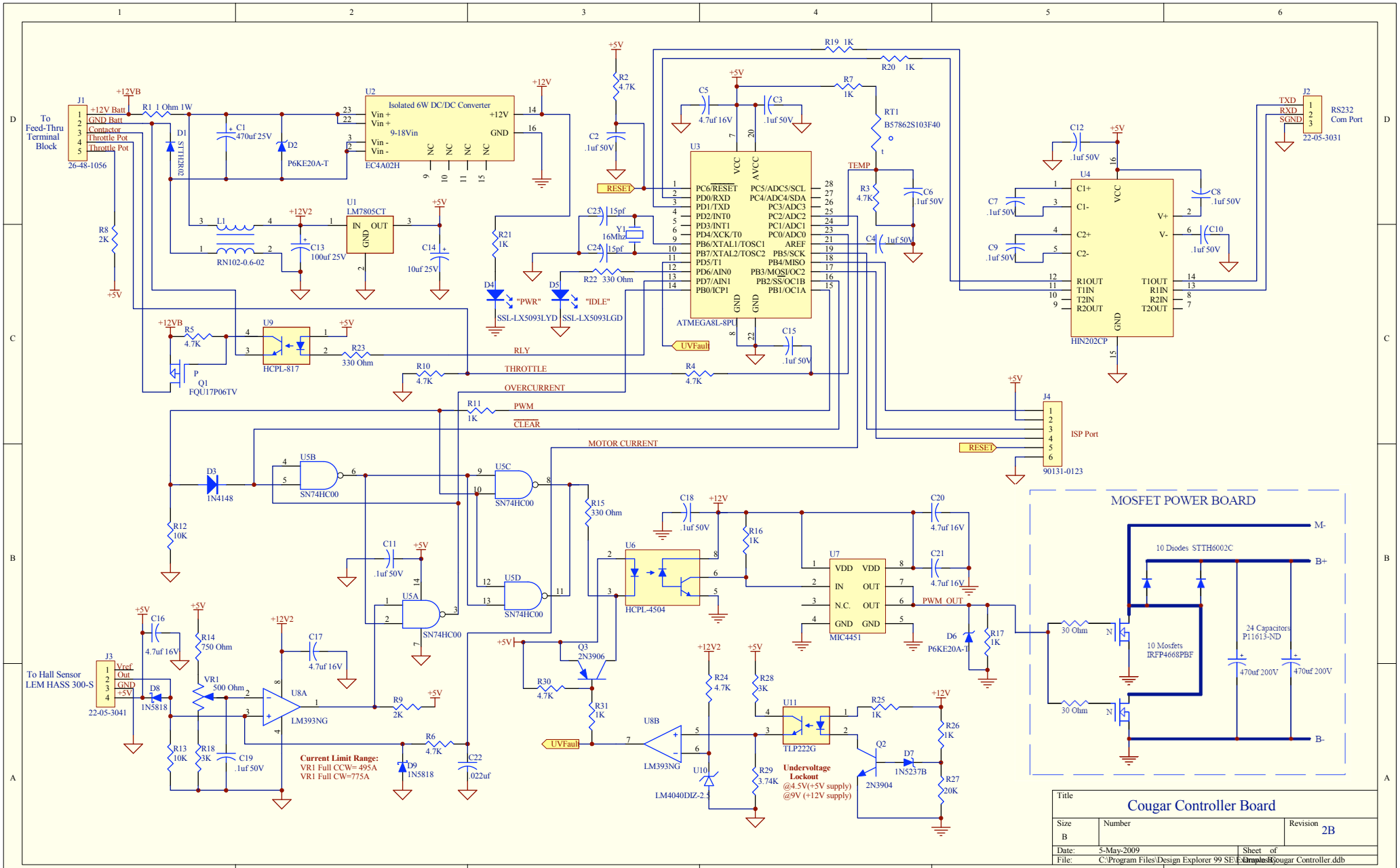
To Feed-Thru Terminal Block
J1
26-48-1056
+12V Batt
GND Batt
Contactor
Throttle Pot
Throttle Pot
+12VB
R1 1 Ohm 1W
D1
STTH2002
C1 470uf 25V
D2
P6KE20A-T
U2
Isolated 6W DC/DC Converter
Vin +
Vin +
9-18Vin
Vin -
Vin -
+12V
GND
NC
EC4A02H
+12V
R8 2K
+5V
L1
RN102-0.6-02
+12V2
C13 100uf 25V
U1
LM7805CT
IN
OUT
GND
+5V
C14 10uf 25V
R21 1K
D4
"PWR"
SSL-LX5093LYD
D5
"IDLE"
SSL-LX5093LGD
+5V
R2 4.7K
C2 .1uf 50V
RESET
C23 15pf
Y1 16Mhz
C24 15pf
R22 330 Ohm
U3
ATMEGA8L-8PU
PC6/RESET
PD0/RXD
PD1/TXD
PD2/INT0
PD3/INT1
PD4/XCK/T0
PB6/XTAL1/TOSC1
PB7/XTAL2/TOSC2
PD5/T1
PD6/AIN0
PD7/AIN1
PB0/ICP1
PC5/ADC5/SCL
PC4/ADC4/SDA
PC3/ADC3
PC2/ADC2
PC1/ADC1
PC0/ADC0
AREF
PB5/SCK
PB4/MISO
PB3/MOSI/OC2
PB2/SS/OC1B
PB1/OC1A
VCC
AVCC
GND
UVFault
C15 .1uf 50V
R19 1K
R20 1K
C5 4.7uf 16V
C3 .1uf 50V
R7 1K
RT1
B57862S103F40
TEMP
R3 4.7K
C6 .1uf 50V
C4 .1uf 50V
C12 .1uf 50V
U4
HIN202CP
C1+
C1-
C2+
C2-
R1OUT
T1IN
T2IN
R2OUT
V+
V-
T1OUT
R1IN
R2IN
T2OUT
C7 .1uf 50V
C9 .1uf 50V
C8 .1uf 50V
C10 .1uf 50V
J2
RS232 Com Port
TXD
RXD
SGND
22-05-3031
+12VB
R5 4.7K
U9
HCPL-817
R23 330 Ohm
Q1
FQU17P06TV
RLY
THROTTLE
OVERCURRENT
R10 4.7K
R4 4.7K
R11 1K
PWM
CLEAR
MOTOR CURRENT
J4
ISP Port
90131-0123
RESET
D3
1N4148
R12 10K
U5B
SN74HC00
U5C
SN74HC00
U5D
SN74HC00
U5A
SN74HC00
C11 .1uf 50V
R15 330 Ohm
C18 .1uf 50V
+12V
R16 1K
U6
HCPL-4504
U7
MIC4451
VDD
IN
N.C.
GND
OUT
PWM OUT
C20 4.7uf 16V
C21 4.7uf 16V
D6
P6KE20A-T
R17 1K
MOSFET POWER BOARD
M-
B+
B-
10 Diodes STTH6002C
10 Mosfets IRFP4668PBF
24 Capacitors P11613-ND
470uf 200V
470uf 200V
30 Ohm
30 Ohm
N
To Hall Sensor LEM HASS 300-S
J3
22-05-3041
Vref
Out
GND
+5V
C16 4.7uf 16V
D8
1N5818
R14 750 Ohm
VR1 500 Ohm
R13 10K
R18 3K
C19 .1uf 50V
U8A
LM393NG
C17 4.7uf 16V
R9 2K
R6 4.7K
D9
1N5818
C22 .022uf
Current Limit Range:
VR1 Full CCW= 495A
VR1 Full CW=775A
Q3
2N3906
R30 4.7K
R31 1K
UVFault
U8B
LM393NG
U10
LM4040DIZ-2.5
R24 4.7K
R28 3K
R29 3.74K
U11
TLP222G
R25 1K
Q2
2N3904
D7
1N5237B
R26 1K
R27 20K
Undervoltage Lockout
@4.5V(+5V supply)
@9V (+12V supply)
Title
Cougar Controller Board
Size
B
Number
Revision
2B
Date: 5-May-2009
Sheet of
File: C:\Program Files\Design Explorer 99 SE\Examples\Cougar Controller.ddb