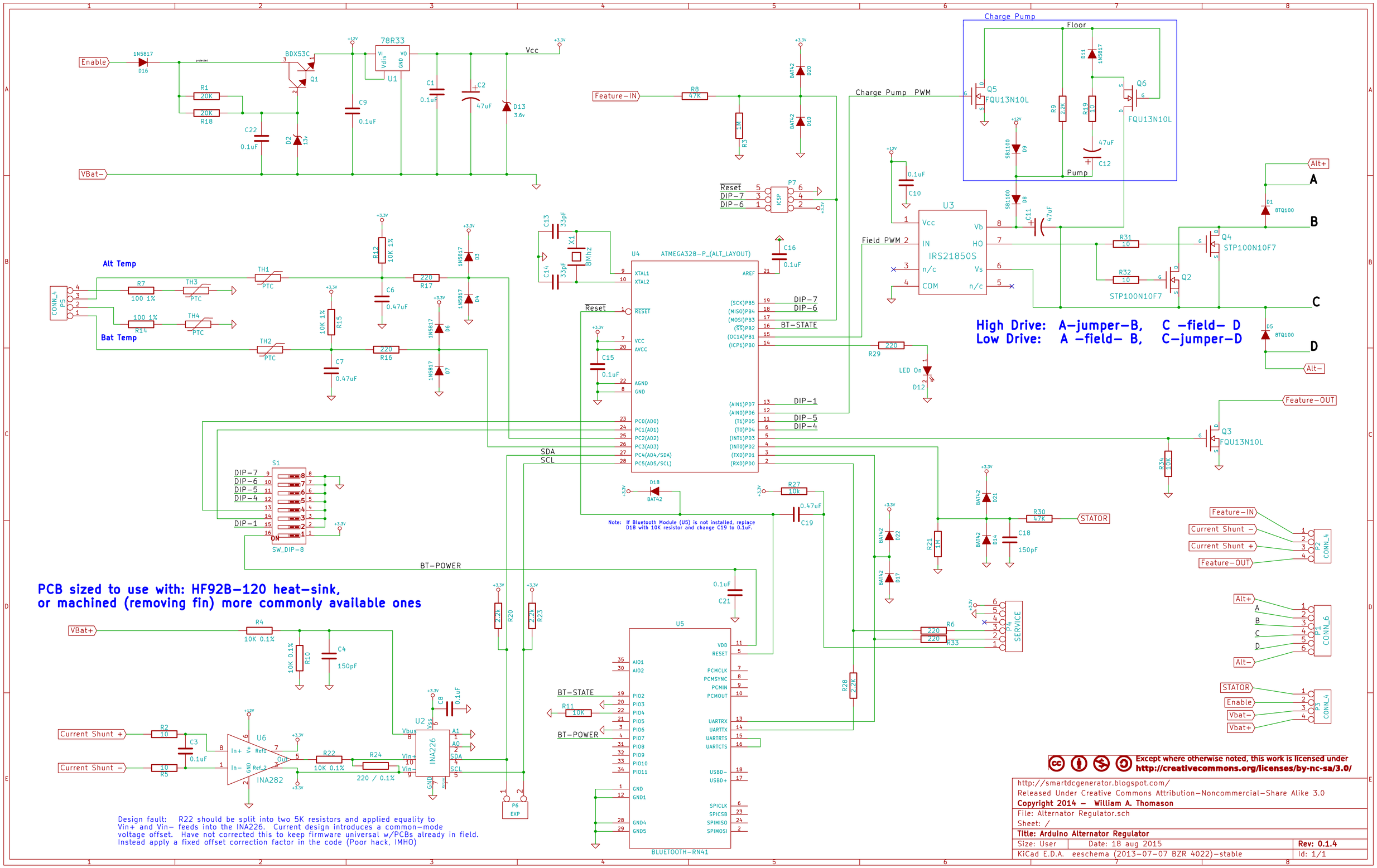

Except where otherwise noted, this work is licensed under
http://creativecommons.org/licenses/by-nc-sa/3.0/

http://smartdcgenerator.blogspot.com/

Released Under Creative Commons Attribution−Noncommercial−Share Alike 3.0
Copyright 2014 − William A. Thomason

File: Alternator Regulator.sch

Sheet: /

Title: Arduino Alternator Regulator

Size: User	Date: 18 aug 2015	Rev: 0.1.4
KiCad E.D.A. eeschema (2013−07−07 BZR 4022)−stable		Id: 1/1