Open and Sovereign Data Infrastructures for AI

The Open Source Release of the KI-Allianz Data Platform

Dr. Till Riedel, Karlsruher Institute of Technology (KIT)

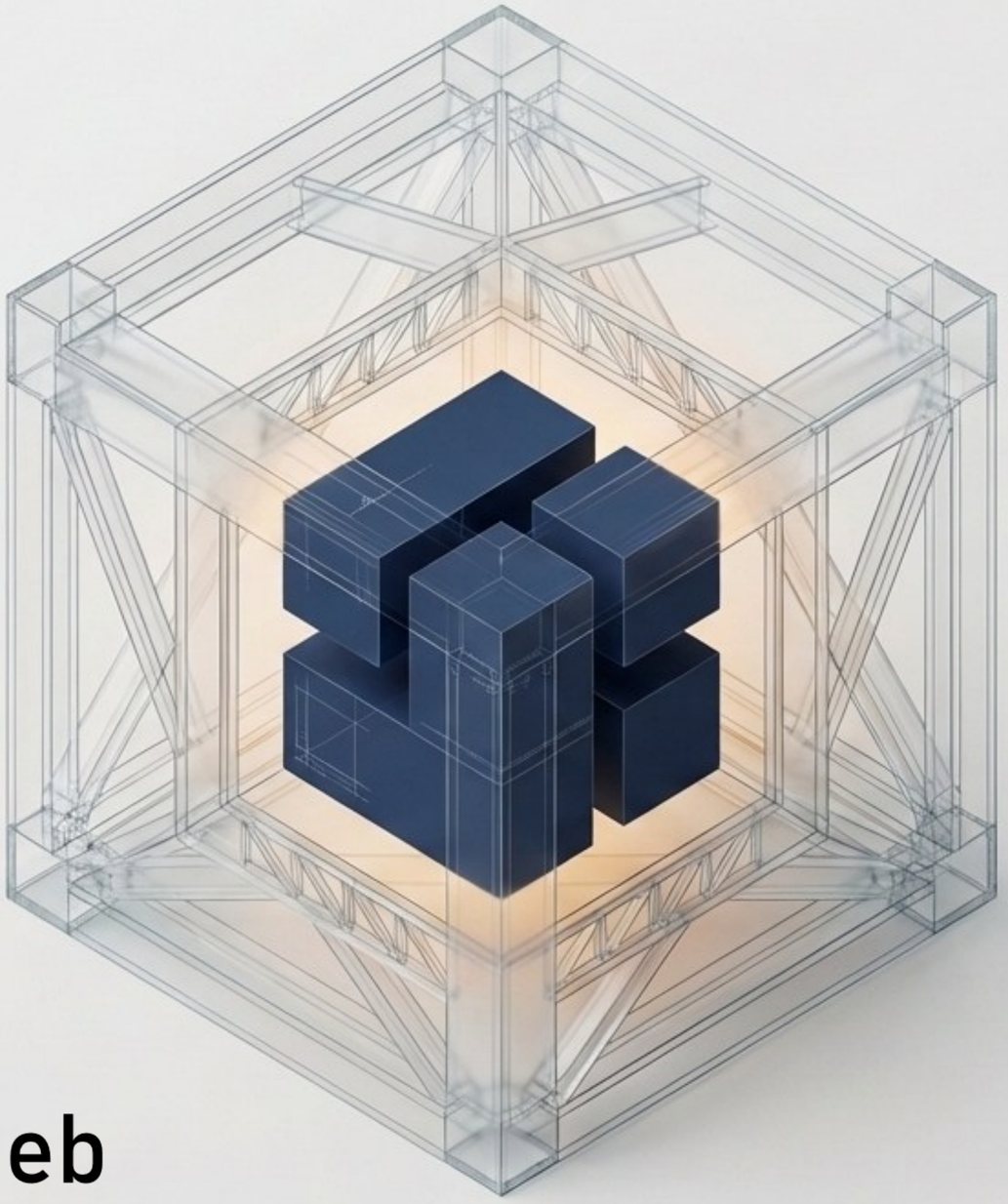

Datenplattform
KI-ALLIANZ
Baden-Württemberg

Testbetrieb

Gefördert durch
Baden-Württemberg
Ministerium für Wirtschaft,
Arbeit und Tourismus

NotebookLM

Open and Sovereign Data Infrastructures

Warning: this presentation was generated using artificial intelligence (NotebookLM).
Despite manual checking it may contain halucinations.
All Sources including prompts available via:

Datenplattform
KI-ALLIANZ
Baden-Württemberg

Testbetrieb

Gefördert durch
Baden-Württemberg
Ministerium für Wirtschaft,
Arbeit und Tourismus

NotebookLM

The Reality Behind the AI Hype

AI models dominate the current innovation cycle, but their success relies entirely on a hidden foundation: AI-ready data.

The Innovation Bottleneck

Incorrect, incomplete, and isolated data severely slows down development, especially for SMEs without specialized data science teams.

The Missing Link

Systematic data management across enterprise borders remains unsolved.

The Fear of Sharing

Organizations hesitate to share sensitive data due to unresolved security and sovereignty concerns.

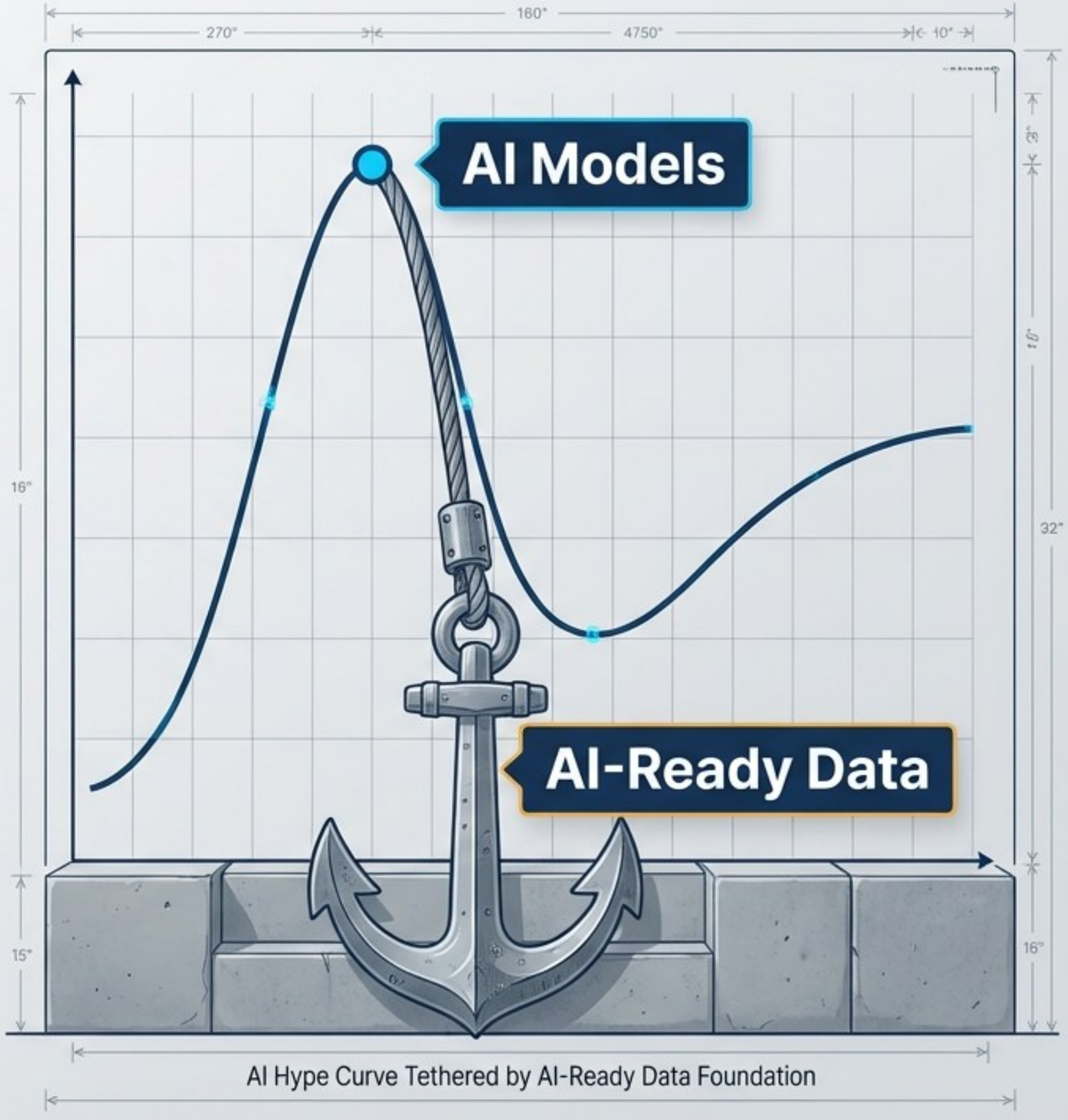

AI Hype Curve Tethered by AI-Ready Data Foundation

NotebookLM

What Can Be Open in an AI Model?

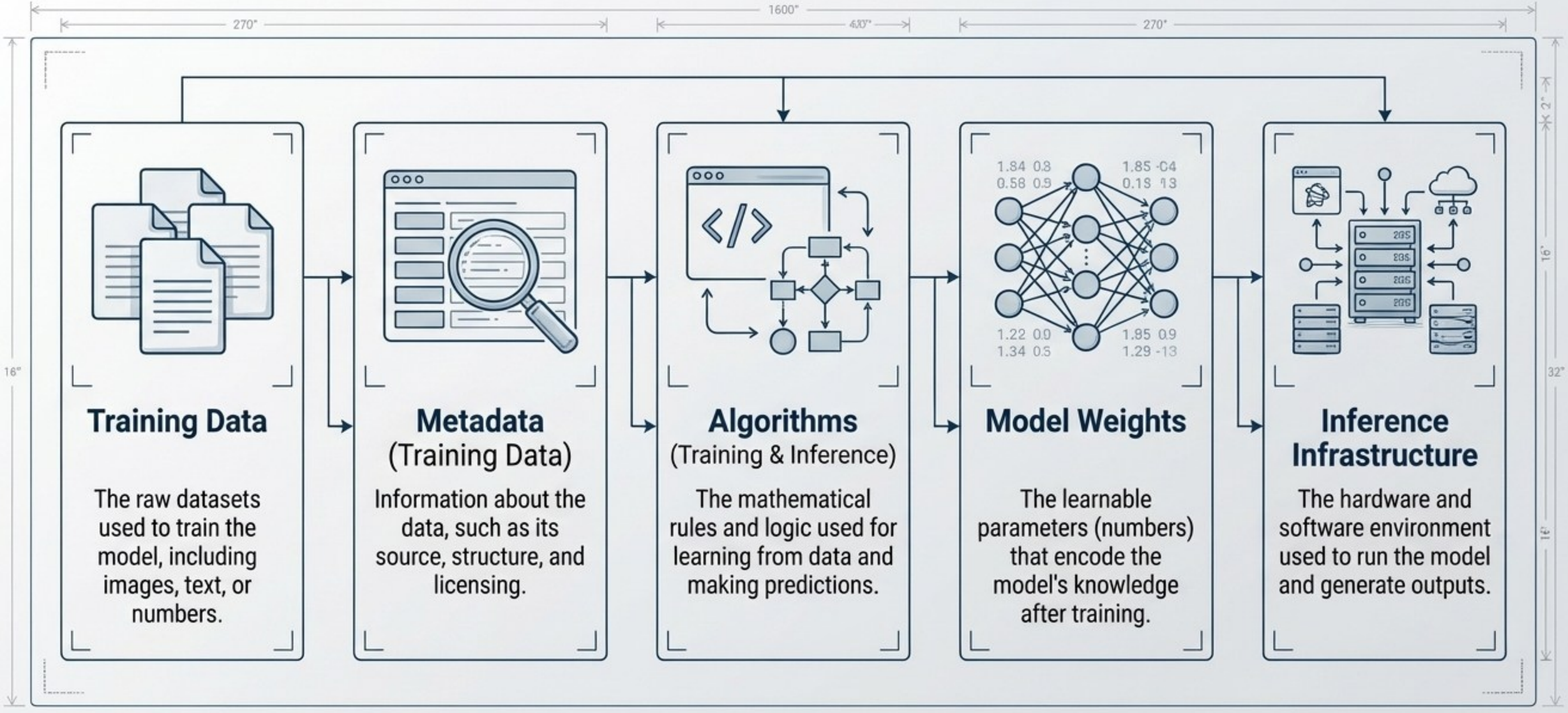

NotebookLM

The ‘Open Data’ Dilemma in Manufacturing and Health

How do we build an open AI ecosystem when our most valuable asset must remain closed?

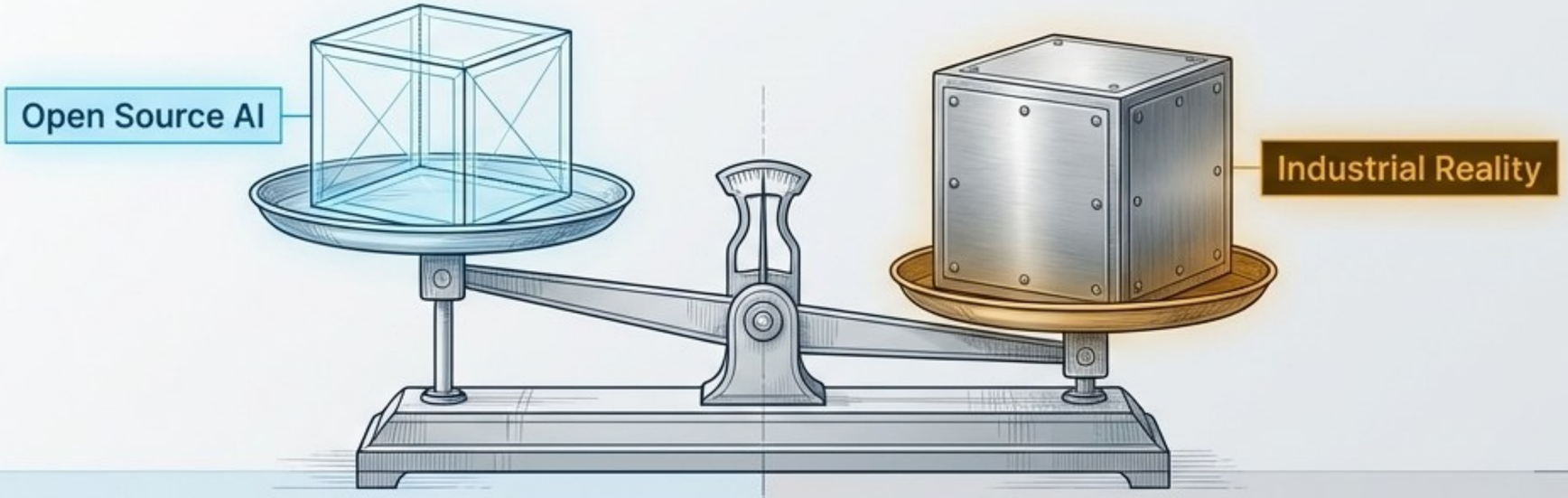

The Open Source AI Ideal

“Open” extends beyond the source code—it requires the actual training data to be freely available and verifiable.

The Industrial Reality

Protecting IP in manufacturing, health, and mobility relies entirely on Trade Secrets.

The Friction Point

Open Data is simply not a viable legal or economic option for industry.

NotebookLM

Open Platforms Facilitating Closed Sources

We resolve the open-data dilemma through a cross-sectorial data space aggregator that separates knowledge of existence from access to the asset.

Decentralized Sovereignty

The actual data remains securely decentralized at the source (companies, hospitals, municipalities).

Standardized Discovery

The open platform ingests and aggregates only the metadata (DCAT-AP).

The Result

You do not share your data; you share the standardized knowledge that your data exists, extending open-source principles to closed models.

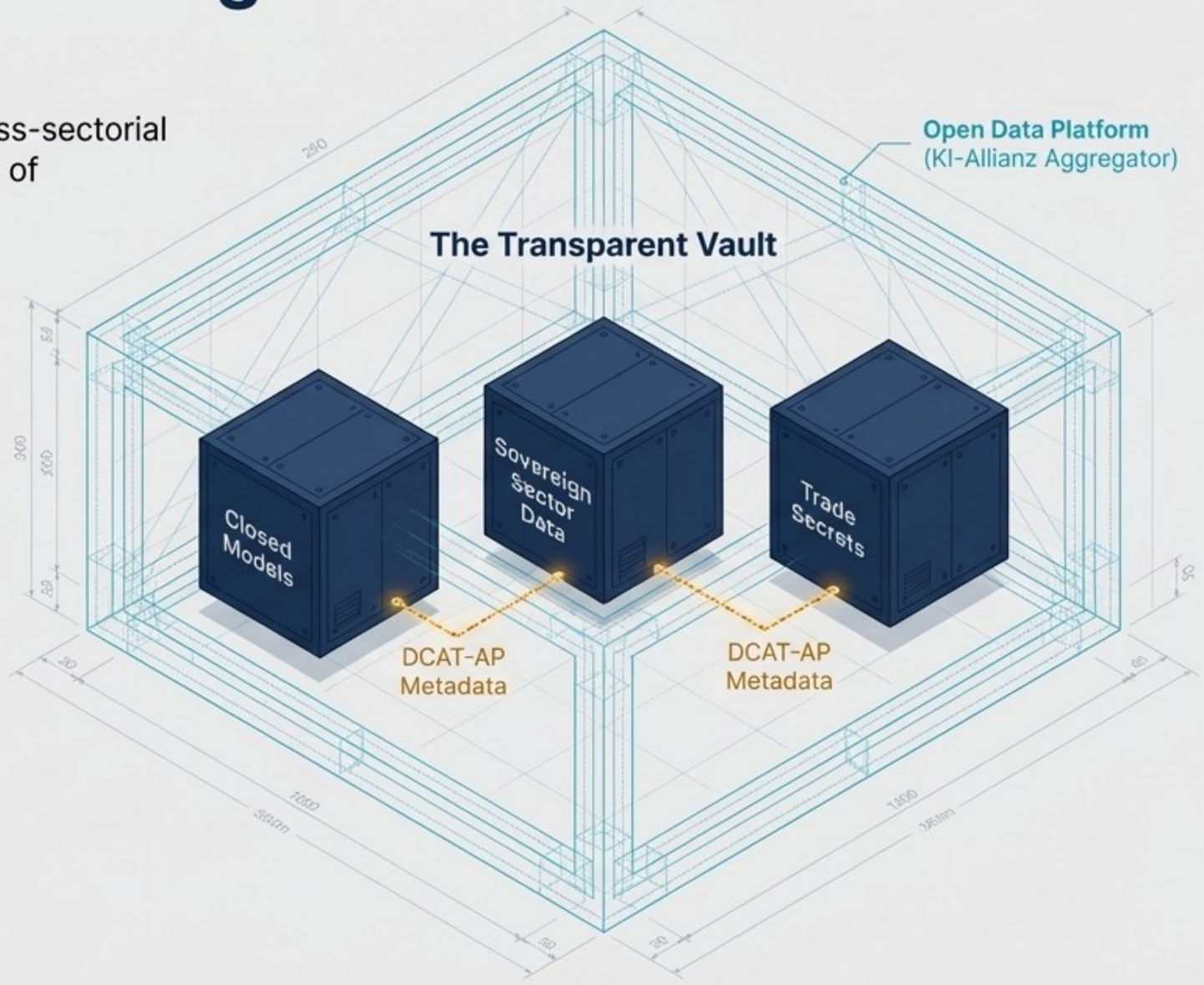

NotebookLM

Released Component 1: The Modern Portal Experience

A reimagined frontend built for modernr modern data workflows, discoverability, and AI integration.

Piveau.nextjs

Built on Next.js 15, providing server-side rendering (SSR) for maximum SEO discoverability and full feature parity with the original Fraunhofer FOKUS Piveau platform.

Semantic Hub Search

A DCAT-aware Chat-Agent upgrading classical lexical search.

Hybrid Discovery

Combines an Ollama-based vector search (conceptual understanding, cross-lingual) with classical Elasticsearch using a rescore-query pipeline.

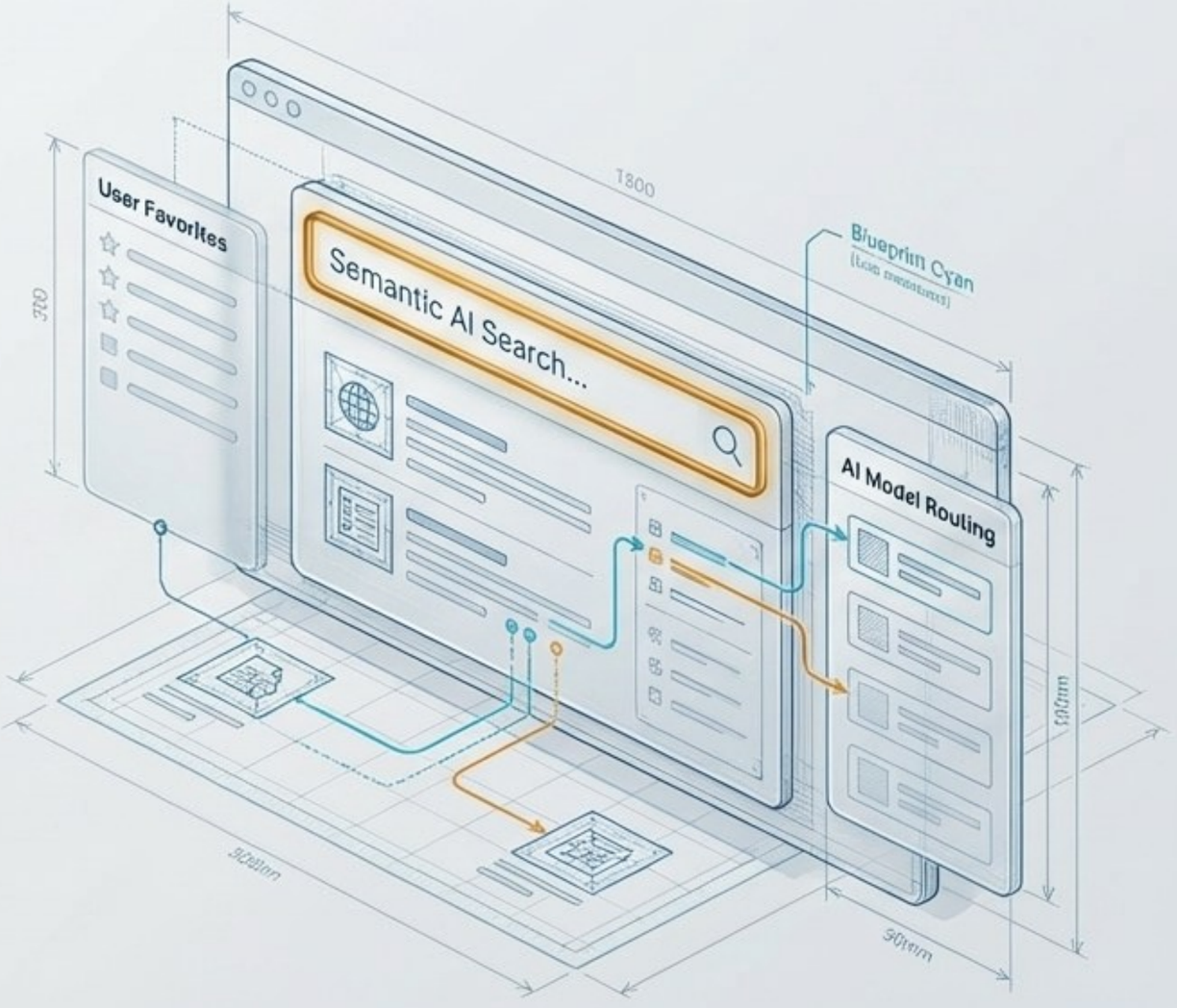

NotebookLM

Released Component 2: Automated Data Quality Services

Data quality determines AI success. We **released a modular, UI-based AI inference platform** optimized for **High-Performance Computing (HLRS)** environments.

Feature Type Inference

Automatically assigns semantic types to dataset columns.

Personal Data Detection

Scans structured datasets to flag privacy-relevant attributes for GDPR compllance.

Automated Imputation

Intelligently handles missing tabular values.

Anomaly Detection (XGBOD)

Utilizes pre-trained ML models to isolate outliers in tabular data, reducing noise for downstream AI training.

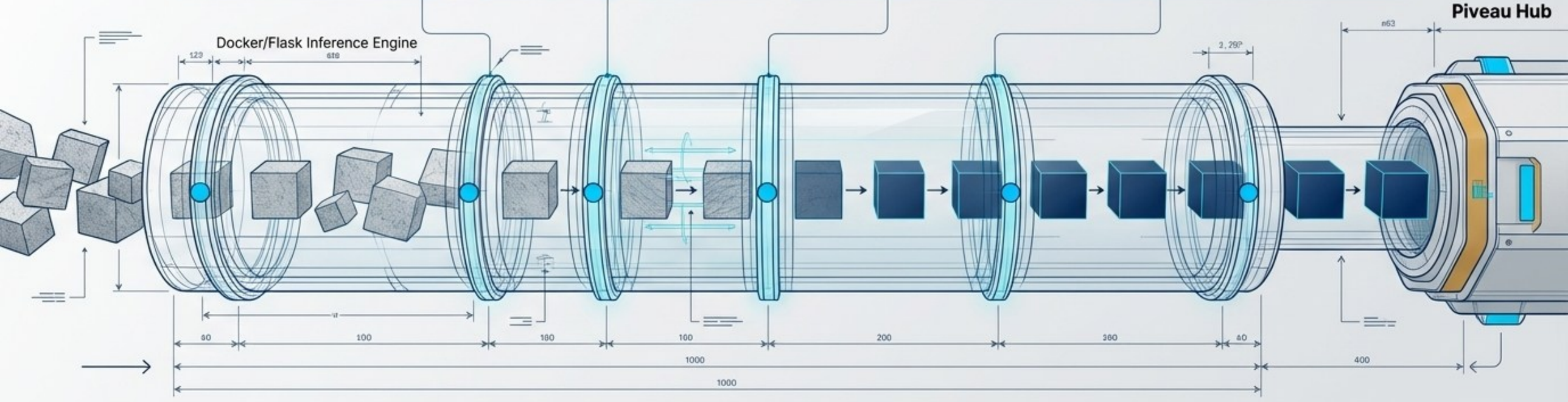

NotebookLM

Released Component 3: The Data Integration Harvesters

Bridging industry-specific data spaces to enable cross-sector AI innovation.

AAS2DCAT (Manufacturing)

A PyQt5 app mapping Industry 4.0 Asset Administration Shells (FA³ST/BaSyx) directly to DCAT-AP JRC datasets.

mds2hdcat (Health)

Converts NFDI4Health records to Health DCAT-AP 0.1.1 JSON-LD for European Health Data Space (EHDS) readiness.

FROST-Server Plugin (Smart City)

Exports real-time IoT SensorThings API streams as DCAT-AP catalogs.

hf2dcat & python-dcat-ap-hub

Seamlessly imports Hugging Face models and datasets into local catalogs.

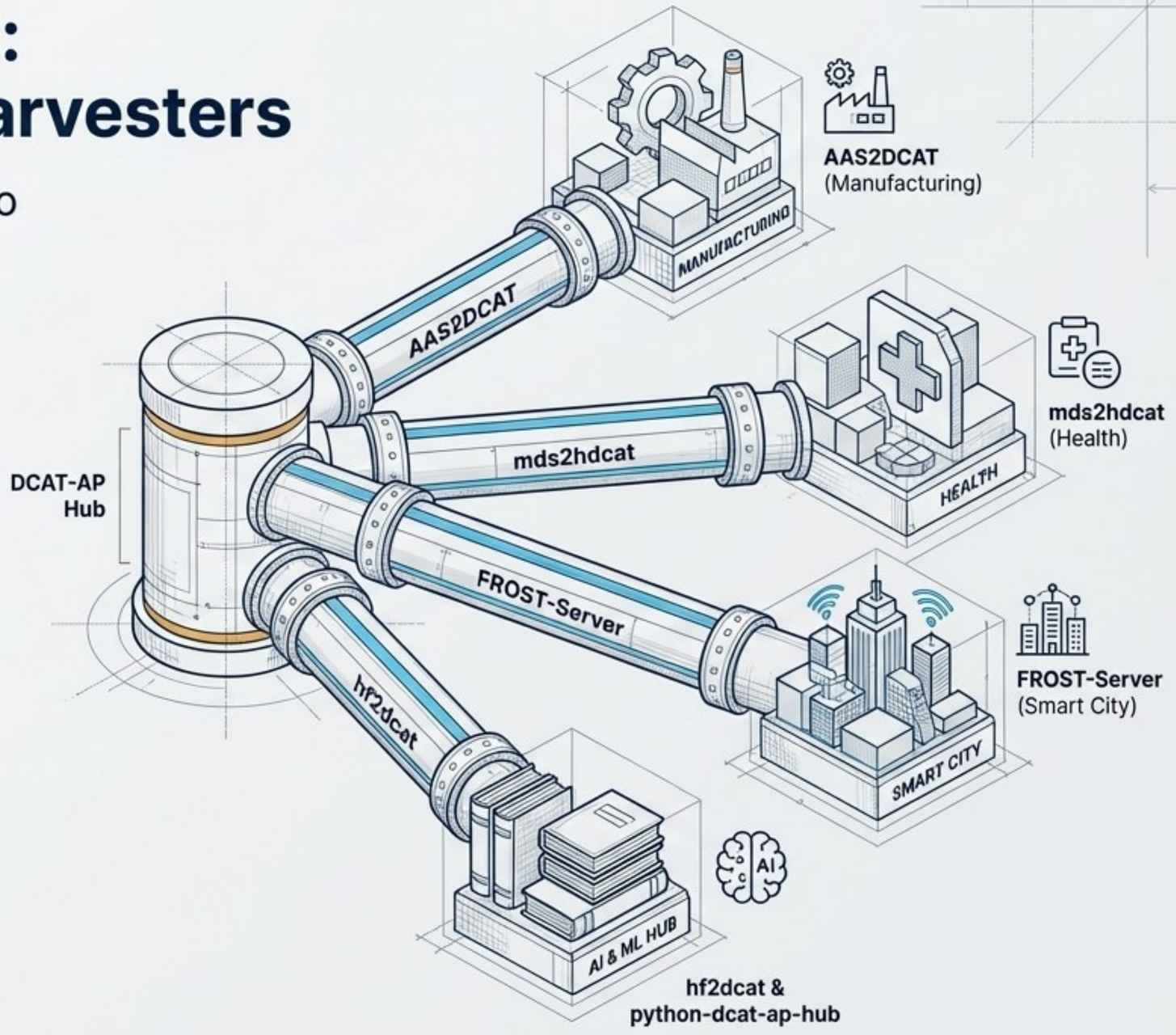

NotebookLM

Why Build on Open Source?
Part 1: Strategy & Foundation

Traditional Public Funding

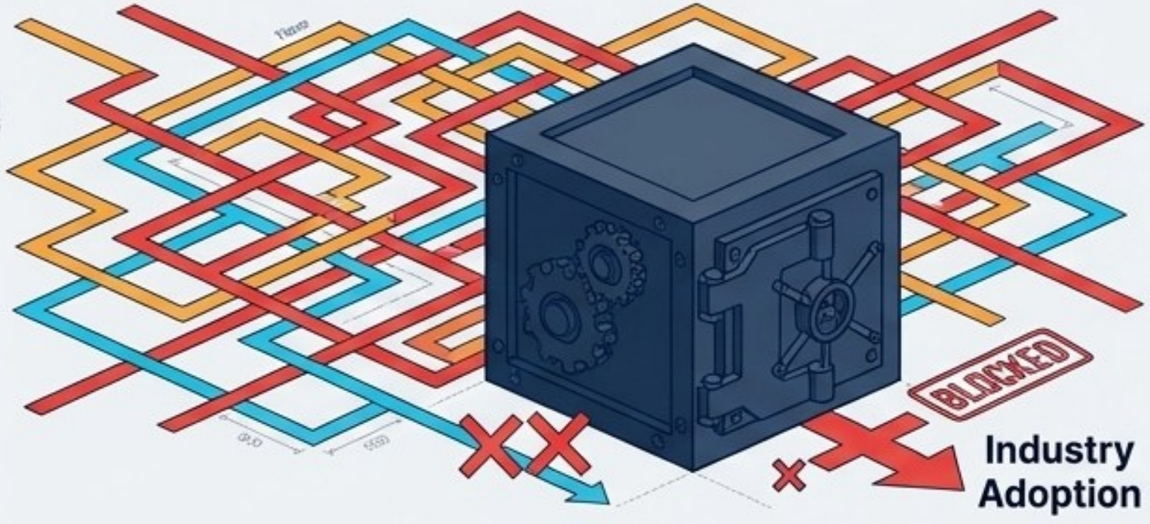

Transferring intellectual property from publicly funded projects directly to industry is legally complex and slow.

Open Source Strategy

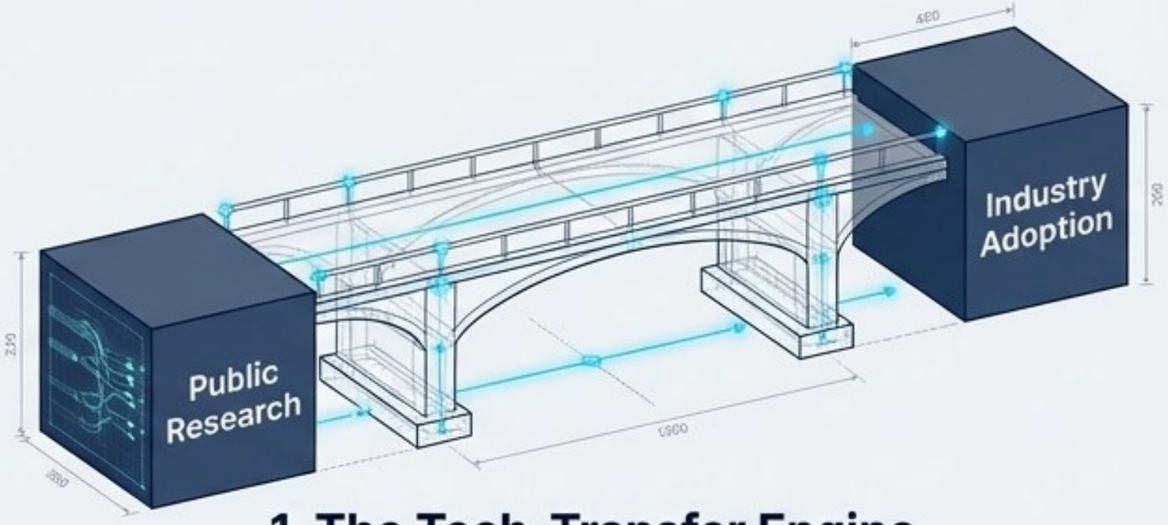

1. The Tech-Transfer Engine

Open source acts as a frictionless legal mechanism to transfer ownership and sustain developments.

2. Standing on Shoulders

By starting with mature, field-proven software (the Piveau ecosystem by Fraunhofer FOKUS), we bypass years of foundational coding to focus entirely on AI-specific innovations.

NotebookLM

Why Build on Open Source? Part 2: Efficiency & Scale

Extreme Resource Efficiency

Migrating the frontend from Vue to React (Next.js) saved massive development capital. The existing open-source Vue implementation served as a living reference architecture, accelerating the rewrite.

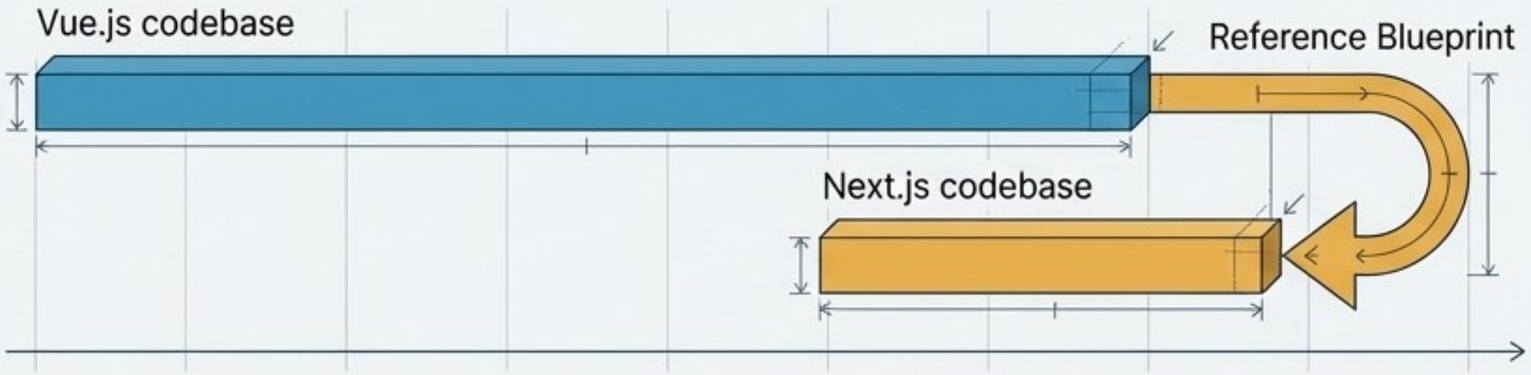

Sustainable Ecosystems

Open source allows us to pool efforts and share financial burdens. The exact same platform architecture is actively powering public municipal data spaces (Datenraum Freiburg) and the EuroHPC AI factory (HammerHAI).

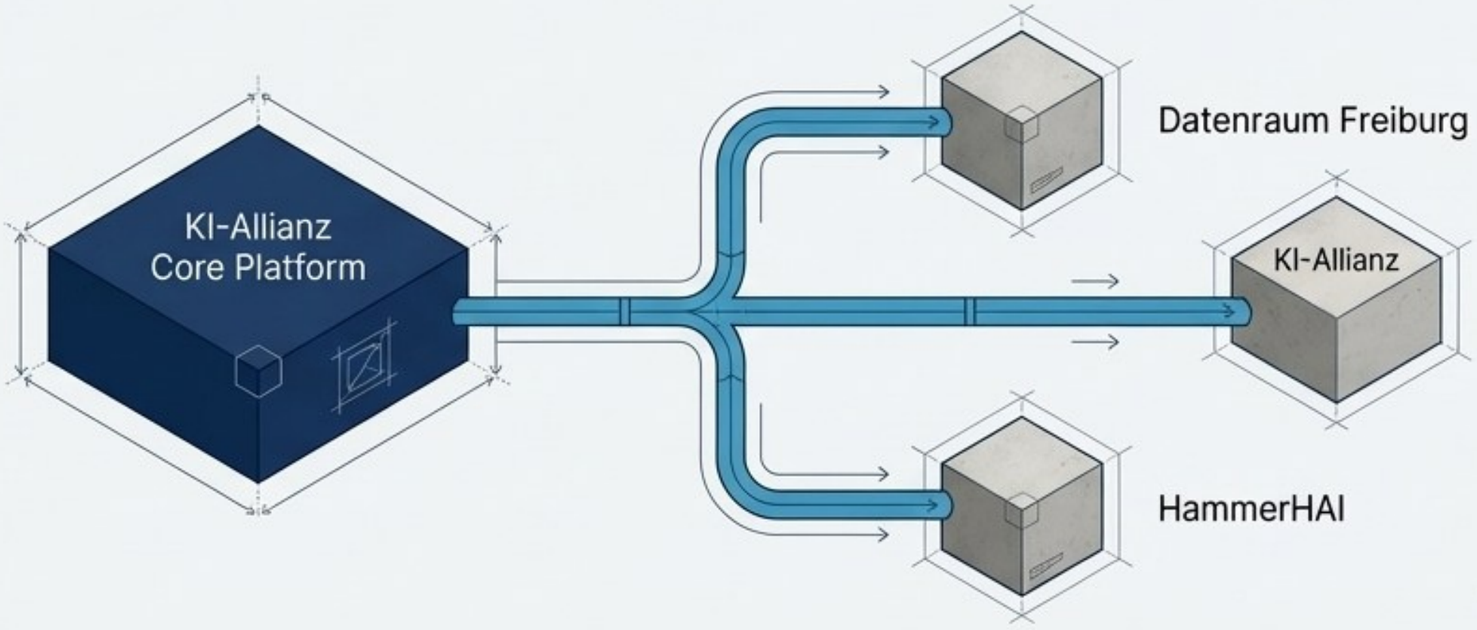

NotebookLM

Why Build on Open Source? Part 3: Enabling Business Models

Open source is a market enabler, removing friction for rapid adoption across Baden-Württemberg and beyond.

Frictionless Whitelabeling

The open-source license allows companies and municipalities to take the platform, rebrand it, and easily deploy their own sovereign data catalogs internally.

Scalable Federation

Organizations can start with a private, internal instance to organize their own AI assets, and later federate their catalog with the broader KI-Allianz network when they are ready to monetize or share.

Whitelabel Deployment

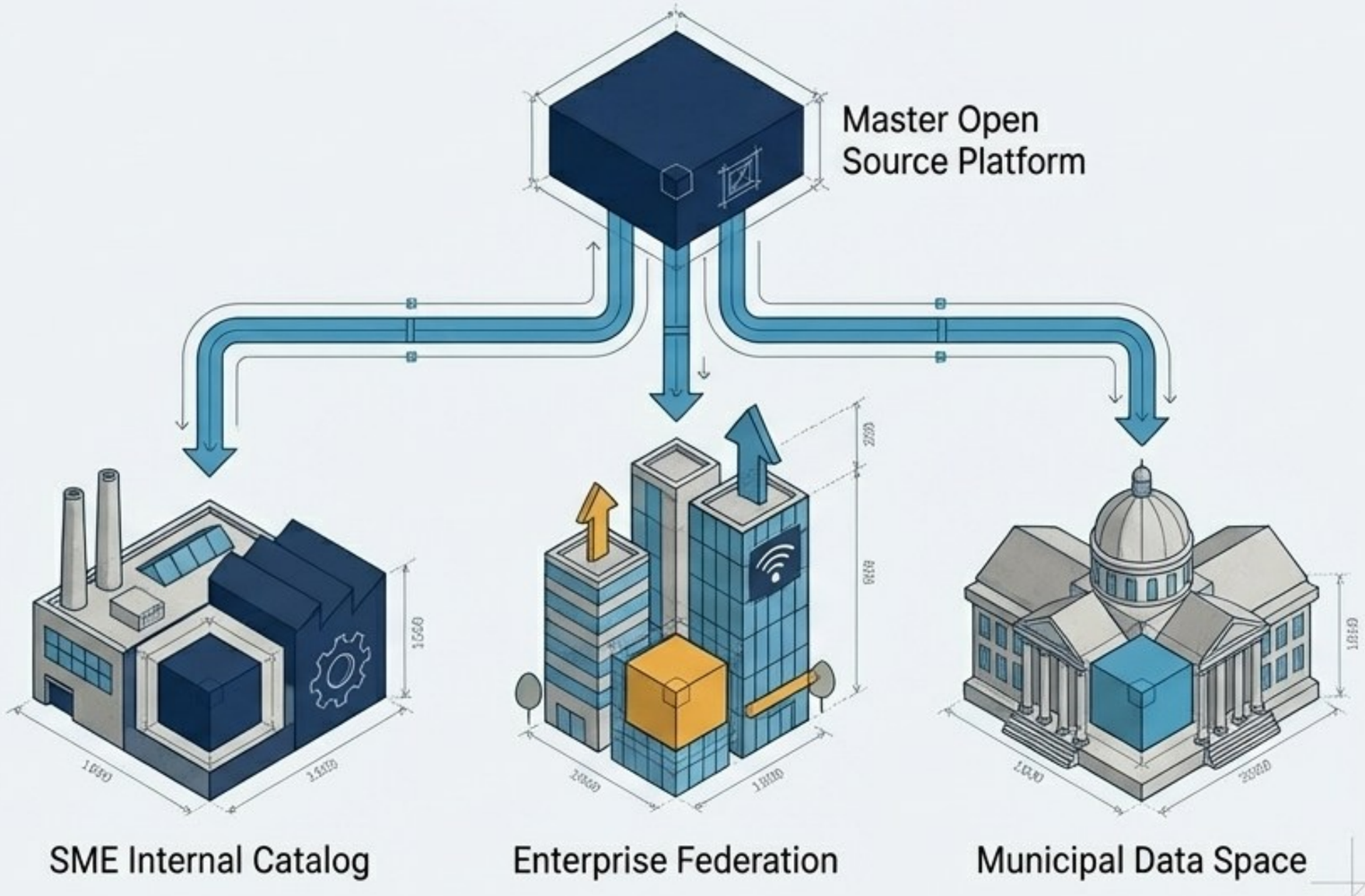

NotebookLM

The Friction Points: Sovereignty vs. Community

A hard lesson learned regarding where open-source software actually lives.

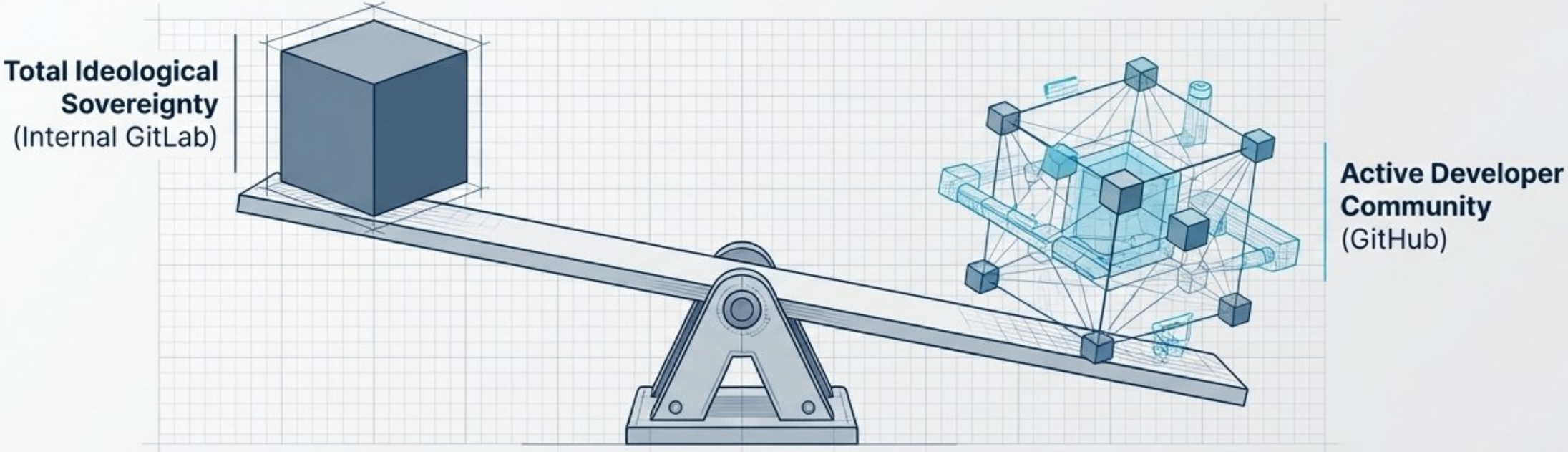

The Initial Stance

To maintain maximum software sovereignty, we originally hosted the project entirely on KIT's internal GitLab instances.

The Reality Check

We had to migrate the core repositories to GitHub.

The Trade-off

True software sovereignty sometimes conflicts with community viability. To reach actual developers, allow external participation, and foster an ecosystem, we had to compromise on hosting sovereignty and go where the open-source community already lives.

NotebookLM

The Friction Points: The Maintenance Chasm

The most difficult aspect of Open Source is not the code—it is the coordination.

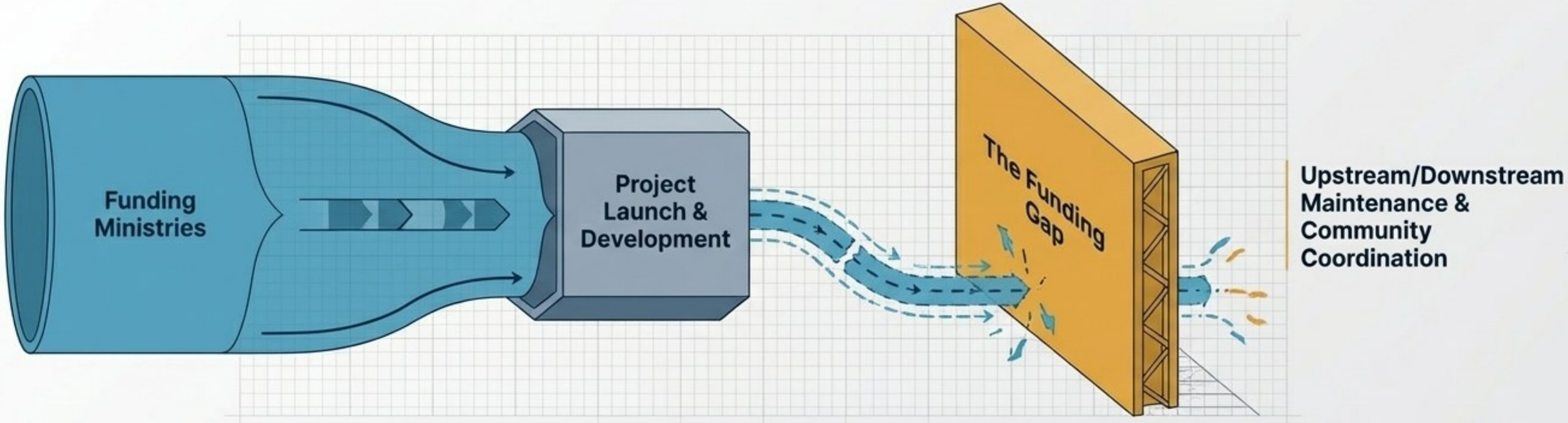

The Upstream/Downstream Burden

Maintaining an active open-source community while coordinating technical alignment with upstream providers (Piveau) and downstream users requires continuous, dedicated labor.

The Funding Disconnect

Typical funding ministries heavily incentivize the creation and launch of new technologies, but currently offer no viable financial models for the long-term maintenance of open-source communities.

NotebookLM

Structuring for Sustainability: The Role of Associations

Closing the funding gap requires new organizational stewards.

The Organizational Fit

Public-private associations like the KI-Allianz are the natural, structurally sound fit to take on the governance and long-term stewardship of these funded open-source projects.

The Competence Shift

This requires a strategic pivot. Associations must aggressively build up internal open-source competence, shifting from mere network facilitators to active maintainers, legal stewards, and community coordinators.

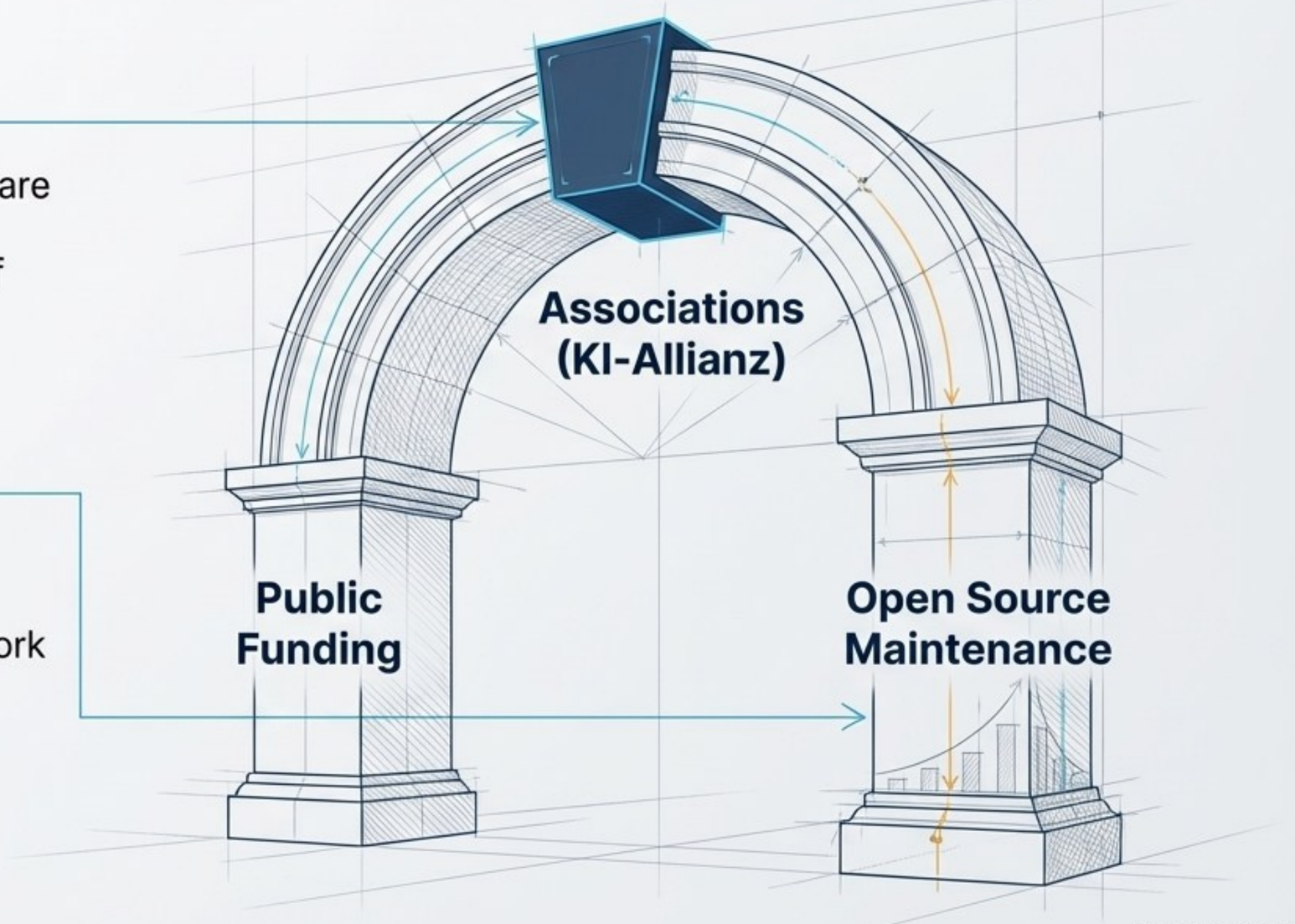

NotebookLM

The Hard Part Starts Now

We have never regretted our early and absolute commitment to Open Source. It enabled our speed, our scale, and our architecture.

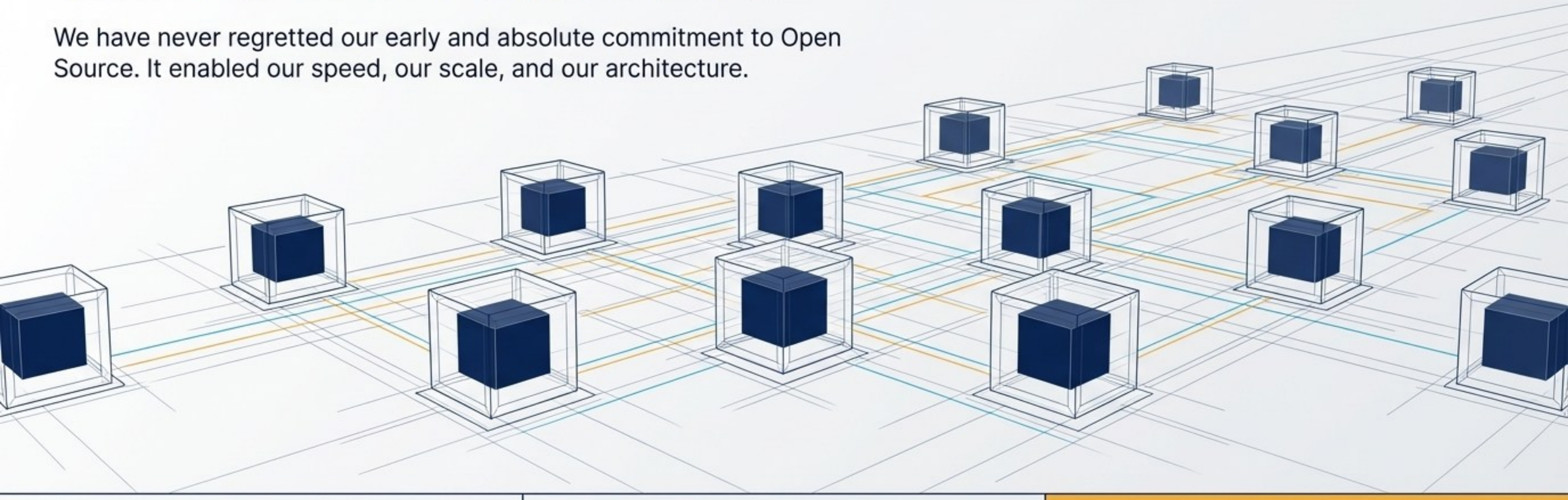

The Blueprint is Live

The KI-Allianz Data Platform provides the infrastructure for AI sovereignty, bridging open software and closed industrial data.

The Call to the Community

The code is out there. Now we must work together to sustain the developments, manage compliance, and build the European AI ecosystem.

Connect & Contribute

Join the KI-Allianz User Forum and explore the repositories on GitHub.

NotebookLM