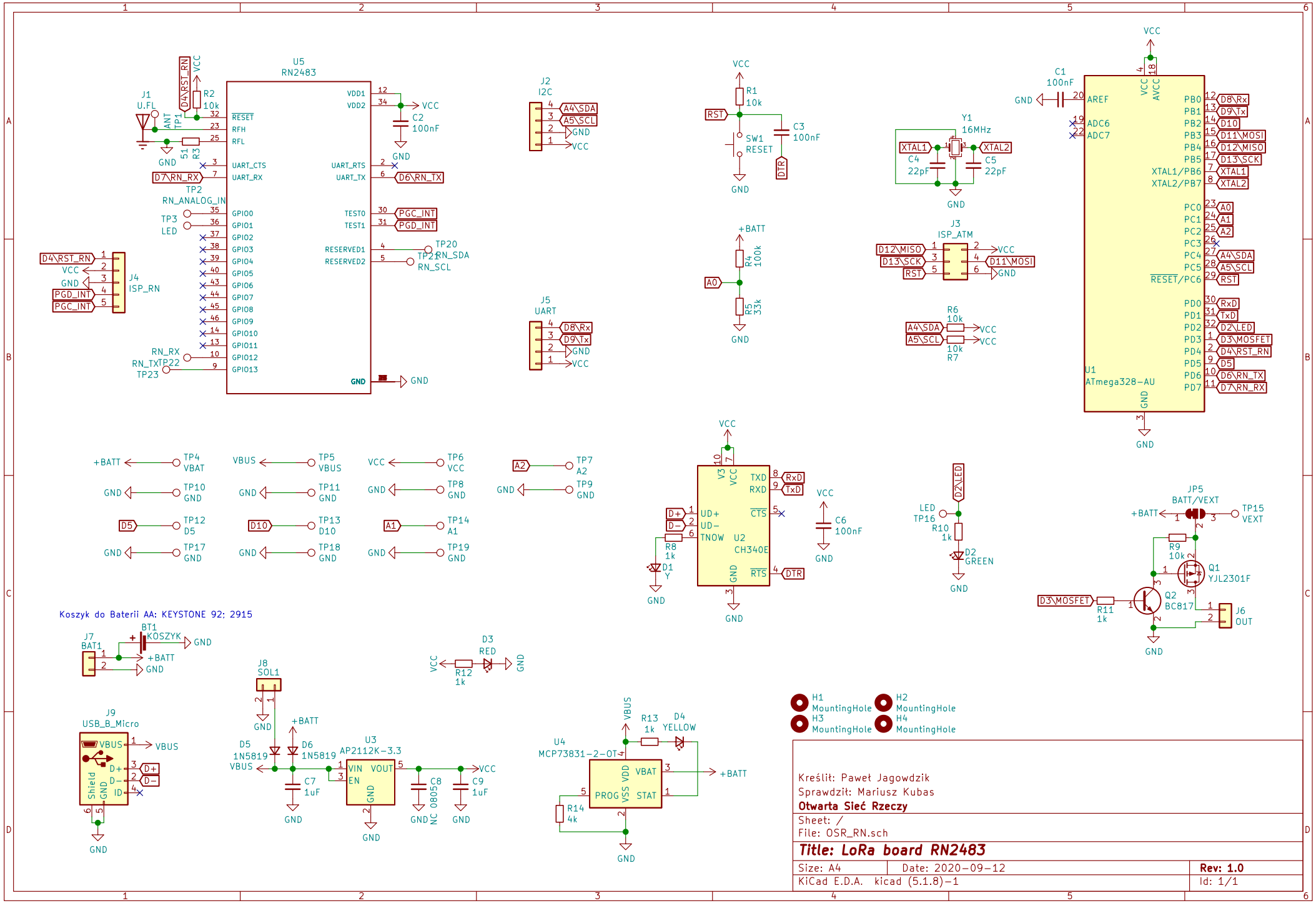
U5
RN2483
J1
U.FL
R2
10k
R3
51
J2
I2C
A4\SDA
A5\SCL
J5
UART
D8\Rx
D9\Tx
J4
ISP_RN
D4\RST_RN
PGD_INT
PGC_INT
D7\RN_RX
D6\RN_TX
RN_ANALOG_IN
RN_SDA
RN_SCL
RN_RX
RN_TX
C2
100nF
R1
10k
SW1
RESET
C3
100nF
Y1
16MHz
C4
22pF
C5
22pF
XTAL1
XTAL2
J3
ISP_ATM
D12\MISO
D13\SCK
D11\MOSI
R4
100k
R5
33k
A0
R6
10k
R7
10k
C1
100nF
U1
ATmega328-AU
D2\LED
D3\MOSFET
RxD
TxD
TP4 VBAT
TP10 GND
TP12 D5
TP17 GND
TP5 VBUS
TP11 GND
TP13 D10
TP18 GND
TP6 VCC
TP8 GND
TP14 A1
TP19 GND
TP7 A2
TP9 GND
U2
CH340E
C6
100nF
R8
1k
D1
Y
LED
TP16
R10
1k
D2
GREEN
JP5
BATT/VEXT
TP15
VEXT
R9
10k
Q1
YJL2301F
Q2
BC817
R11
1k
J6
OUT
Koszyk do Baterii AA: KEYSTONE 92; 2915
J7
BAT1
BT1
KOSZYK
D3
RED
R12
1k
J8
SOL1
J9
USB_B_Micro
VBUS
D5
1N5819
D6
1N5819
U3
AP2112K-3.3
VIN
VOUT
EN
C7
1uF
C8
0805
NC
C9
1uF
U4
MCP73831-2-OT
R13
1k
D4
YELLOW
R14
4k
PROG
VDD
VBAT
VSS
STAT
H1
MountingHole
H2
MountingHole
H3
MountingHole
H4
MountingHole
Kreślił: Paweł Jagowdzik
Sprawdził: Mariusz Kubas
Otwarta Sieć Rzeczy
Sheet: /
File: OSR_RN.sch
Title: LoRa board RN2483
Size: A4
Date: 2020-09-12
Rev: 1.0
KiCad E.D.A. kicad (5.1.8)-1
Id: 1/1