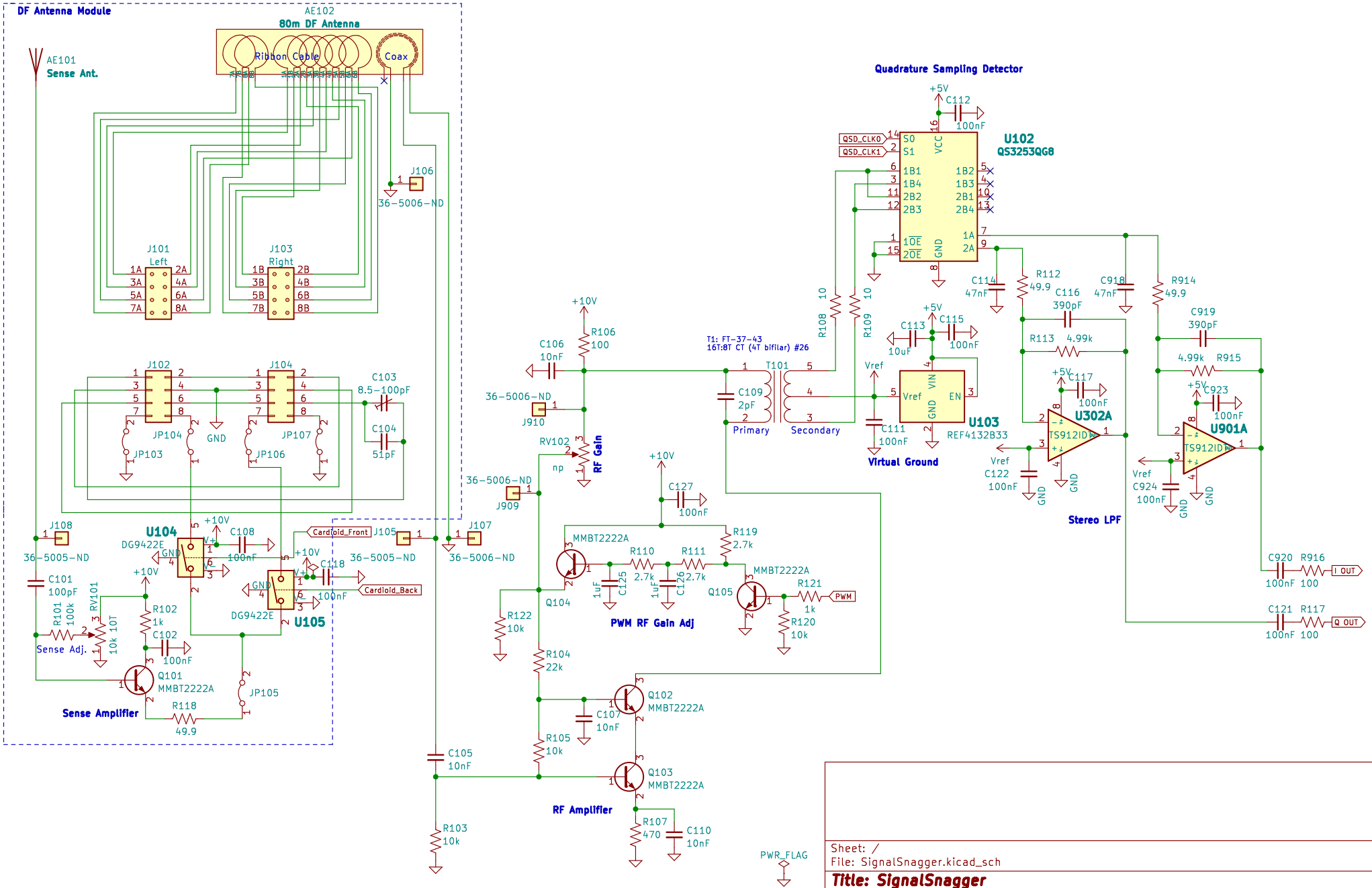

Sheet: /
File: SignalSnagger.kicad_sch

Title: SignalSnagger

Size: A4	Date: 2024-05-03	Rev: 0.317
KiCad E.D.A. kicad (6.0.4-0)		Id: 1/4

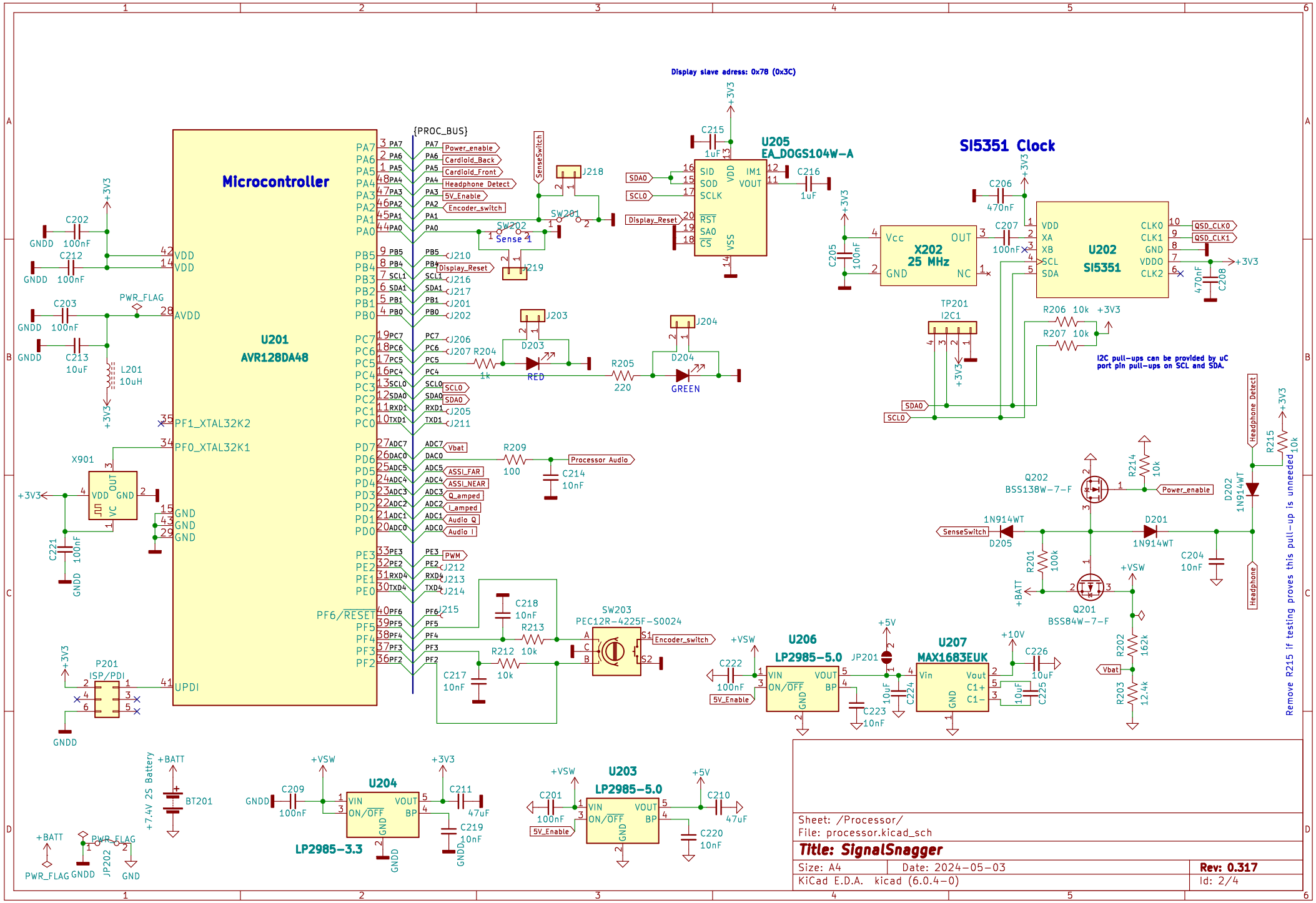
Microcontroller
U201
AVR128DA48
Display slave adress: 0x78 (0x3C)
U205
EA_DOGS104W-A
SI5351 Clock
X202
25 MHz
U202
SI5351
TP201
I2C1
i2C pull-ups can be provided by uC port pin pull-ups on SCL and SDA.
Q202
BSS138W-7-F
Q201
BSS84W-7-F
D202
1N914WT
D201
1N914WT
D205
1N914WT
Remove R215 if testing proves this pull-up is unneeded
X901
P201
ISP/PDI
SW203
PEC12R-4225F-S0024
U206
LP2985-5.0
U207
MAX1683EUK
U204
LP2985-3.3
U203
LP2985-5.0
BT201
+7.4V 2S Battery
Sheet: /Processor/
File: processor.kicad_sch
Title: SignalSnagger
Size: A4
Date: 2024-05-03
Rev: 0.317
KiCad E.D.A. kicad (6.0.4-0)
Id: 2/4

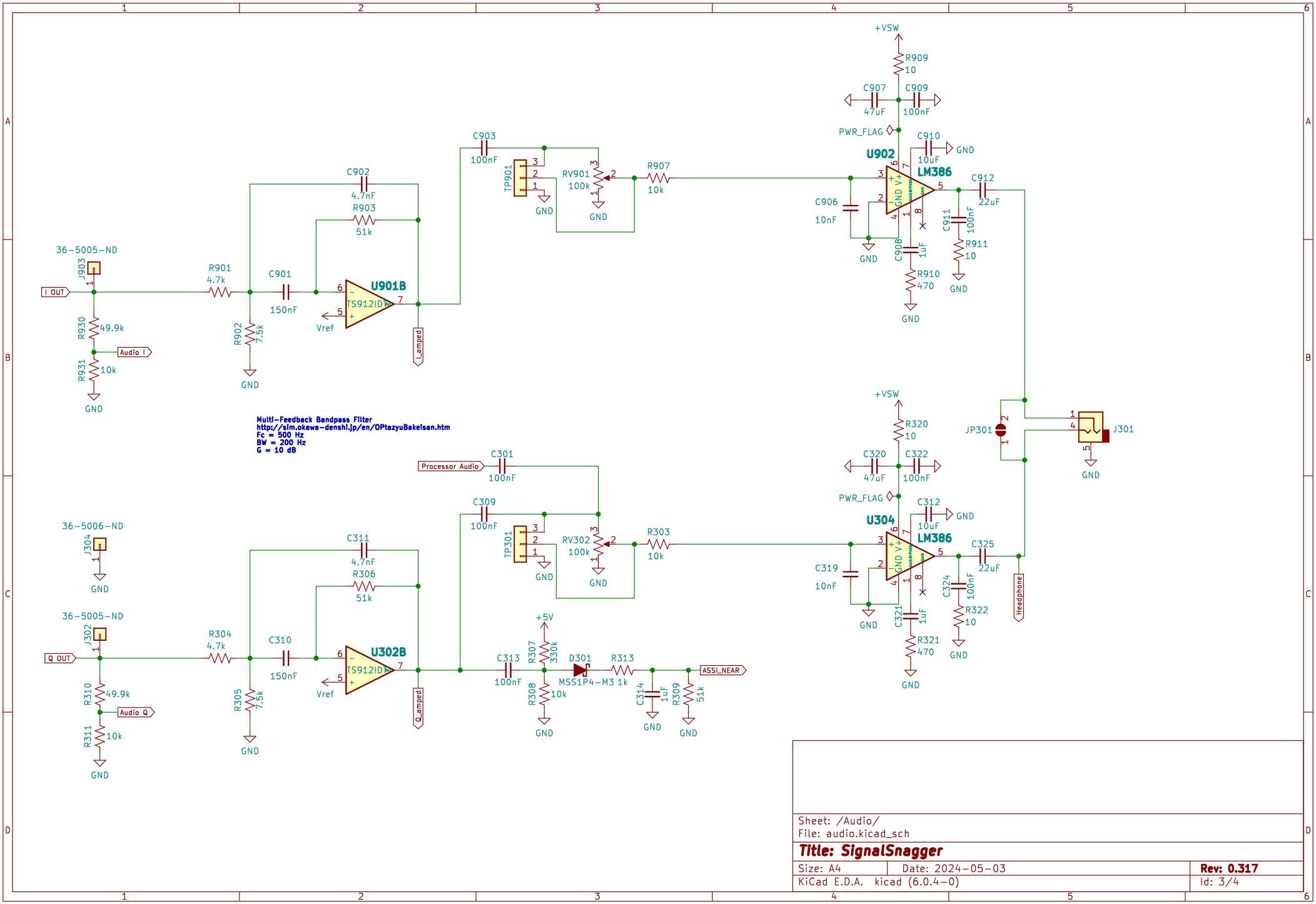

Sheet: /Audio/
File: audio.kicad_sch

Title: SignalSnagger

Size: A4	Date: 2024-05-03	**Rev: 0.317**
KiCad E.D.A. kicad (6.0.4-0)		Id: 3/4

Knob401

Note for reference only and use
the pins #'s in the root page of
the schematic. Reason pin 7 and 8
were swapped: to get proper
phasing of this sense loop.

Sheet: /Antenna Diagram/ File: antenna_diagram.kicad_sch		
Title: SignalSnagger		
Size: A4	Date: 2024-05-03	**Rev: 0.317**
KiCad E.D.A. kicad (6.0.4-0)		Id: 4/4