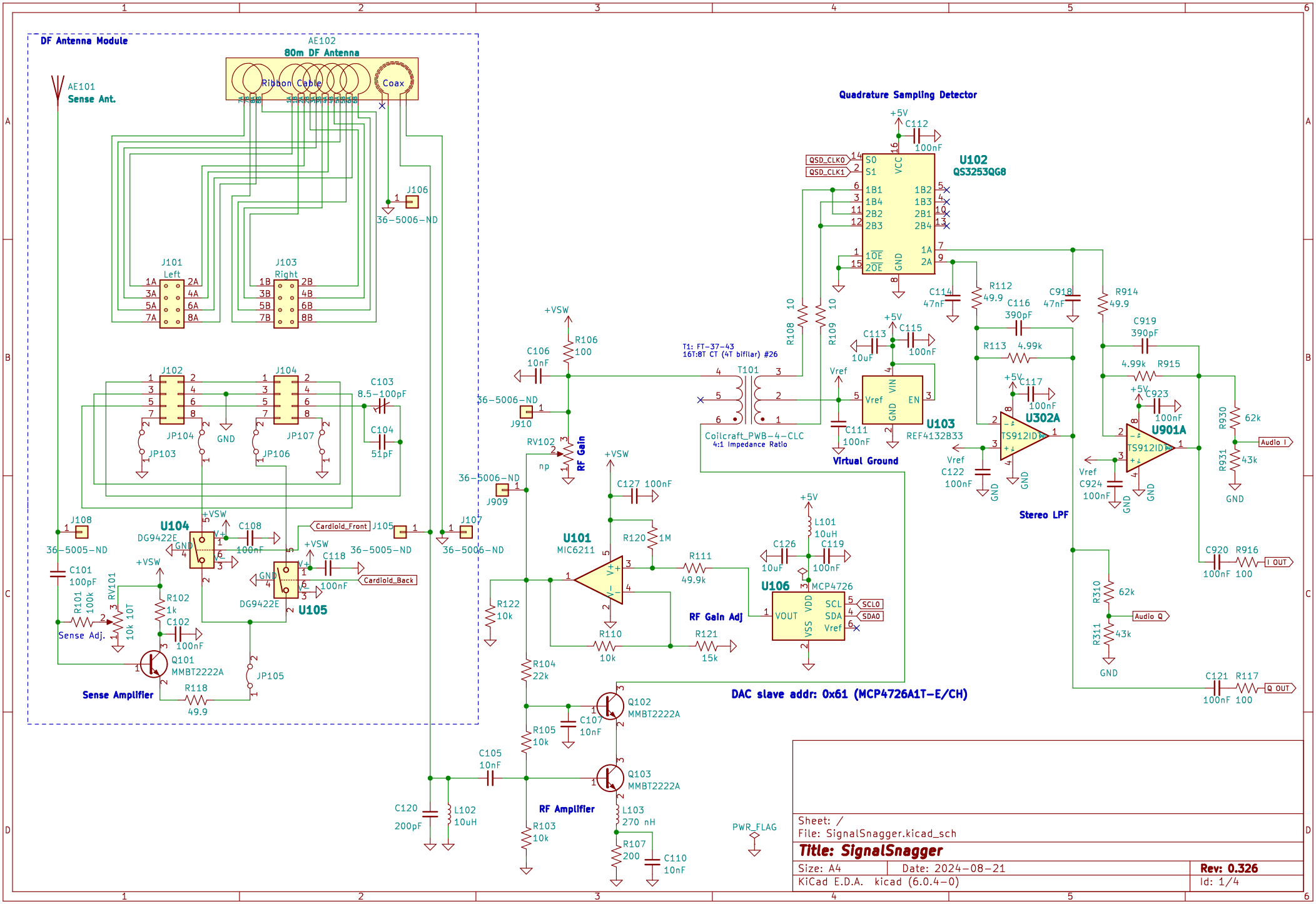
DF Antenna Module
AE102
80m DF Antenna
Ribbon Cable
Coax
AE101
Sense Ant.
J101
Left
J103
Right
J106
36-5006-ND
J102
J104
JP104
JP107
JP103
JP106
JP105
GND
C103
8.5-100pF
C104
51pF
J108
36-5005-ND
C101
100pF
R101
100k
RV101
10k 10T
Sense Adj.
R102
1k
C102
100nF
Q101
MMBT2222A
R118
49.9
Sense Amplifier
U104
DG9422E
C108
100nF
+VSW
Cardioid_Front
J105
36-5005-ND
C118
100nF
Cardioid_Back
U105
DG9422E
J107
36-5006-ND
Quadrature Sampling Detector
+5V
C112
100nF
U102
QS3253QG8
QSD_CLK0
QSD_CLK1
S0
S1
VCC
1B1
1B4
2B2
2B3
1B2
1B3
2B1
2B4
1OE
2OE
GND
1A
2A
C114
47nF
R112
49.9
C116
390pF
C918
47nF
R914
49.9
C919
390pF
R113
4.99k
4.99k
R915
R108
10
R109
10
C113
10uF
C115
100nF
T1: FT-37-43
16T:8T CT (4T bifilar) #26
T101
Coilcraft_PWB-4-CLC
4:1 Impedance Ratio
Vref
VIN
EN
U103
REF4132B33
C111
100nF
Virtual Ground
C117
100nF
U302A
TS912IDT
C122
100nF
C923
100nF
U901A
TS912IDT
C924
100nF
R930
62k
R931
43k
Audio I
Stereo LPF
C920
100nF
R916
100
I OUT
R310
62k
R311
43k
Audio Q
C121
100nF
R117
100
Q OUT
+VSW
R106
100
C106
10nF
36-5006-ND
J910
RV102
np
RF Gain
36-5006-ND
J909
C127
100nF
U101
MIC6211
R120
1M
R111
49.9k
R122
10k
R110
10k
R121
15k
RF Gain Adj
C126
10uF
L101
10uH
C119
100nF
U106
MCP4726
VOUT
VDD
VSS
SCL
SDA
Vref
SCL0
SDA0
DAC slave addr: 0x61 (MCP4726A1T-E/CH)
R104
22k
C107
10nF
Q102
MMBT2222A
R105
10k
C105
10nF
Q103
MMBT2222A
C120
200pF
L102
10uH
RF Amplifier
R103
10k
L103
270 nH
R107
200
C110
10nF
PWR_FLAG
Sheet: /
File: SignalSnagger.kicad_sch
Title: SignalSnagger
Size: A4
Date: 2024-08-21
Rev: 0.326
KiCad E.D.A. kicad (6.0.4-0)
Id: 1/4

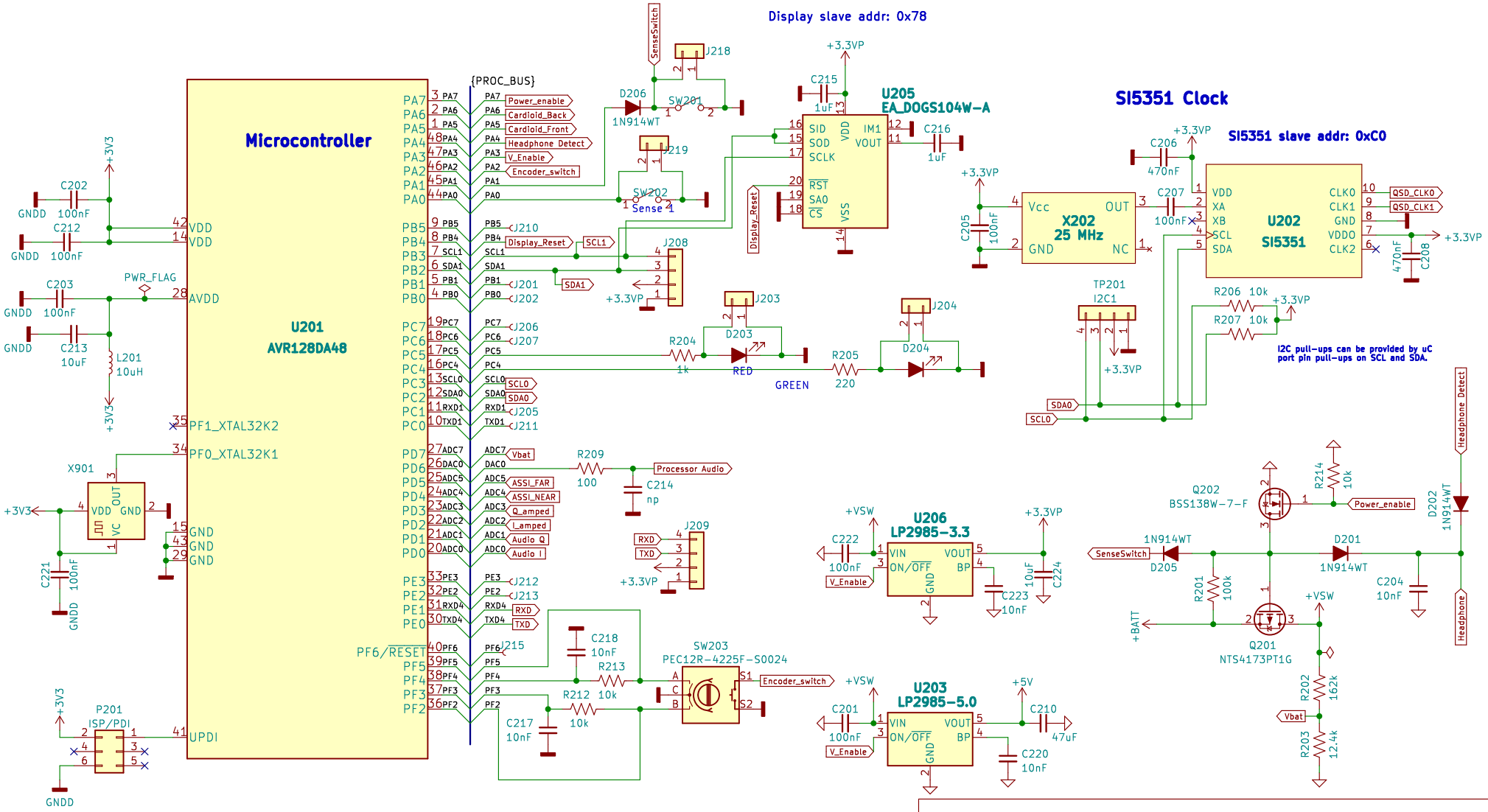

Sheet: /Processor/
File: processor.kicad_sch

Title: SignalSnagger

Size: A4	Date: 2024-08-21	Rev: 0.326
KiCad E.D.A. kicad (6.0.4-0)		Id: 2/4

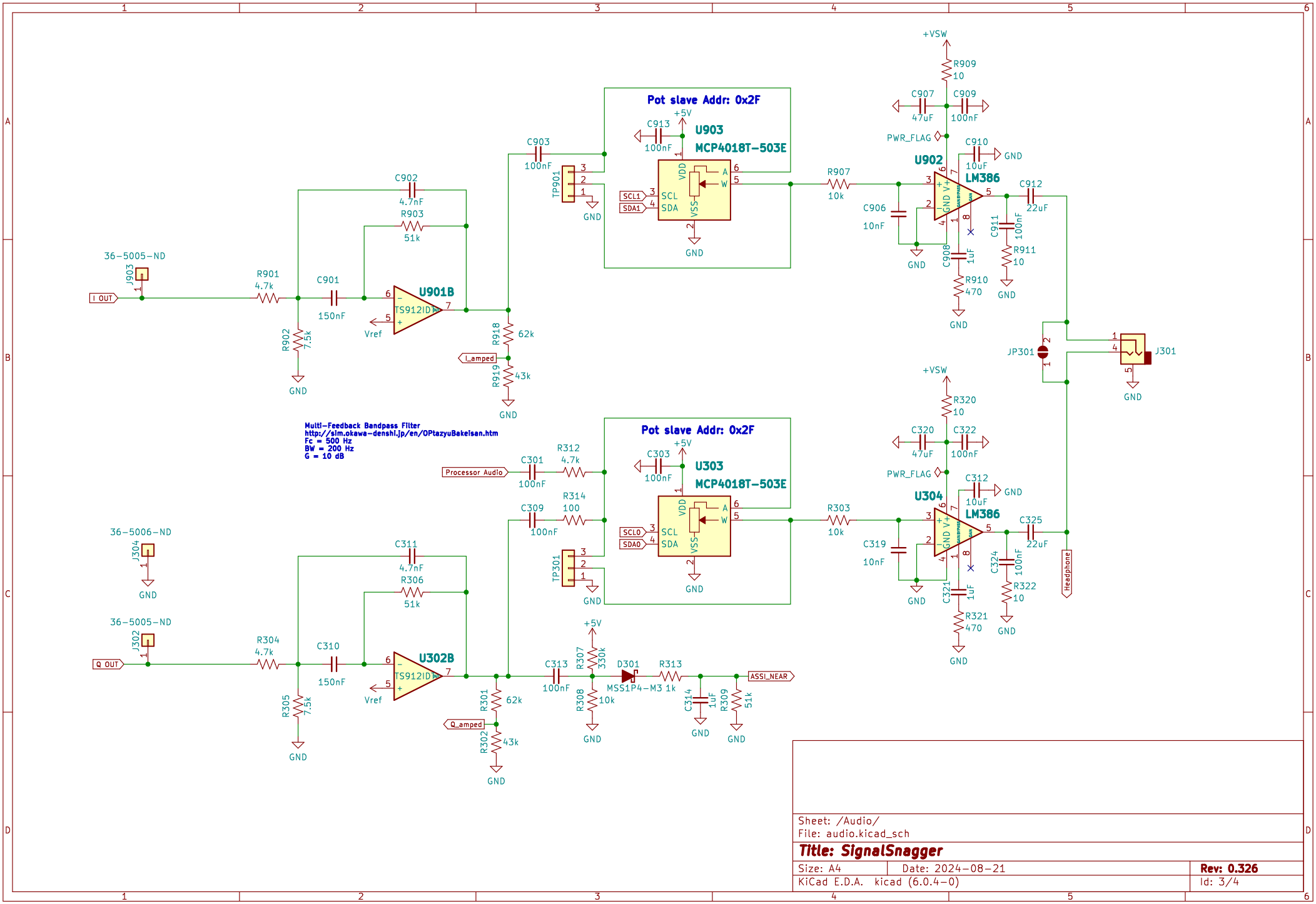

Sheet: /Audio/
File: audio.kicad_sch

Title: SignalSnagger

Size: A4	Date: 2024-08-21	Rev: 0.326
KiCad E.D.A. kicad (6.0.4-0)		Id: 3/4

Knob401

Note for reference only and use
the pins #'s in the root page of
the schematic. Reason pin 7 and 8
were swapped: to get proper
phasing of this sense loop.

Sheet: /Antenna Diagram/
File: antenna_diagram.kicad_sch

Title: SignalSnagger

Size: A4	Date: 2024-08-21	**Rev: 0.326**
KiCad E.D.A. kicad (6.0.4-0)		Id: 4/4