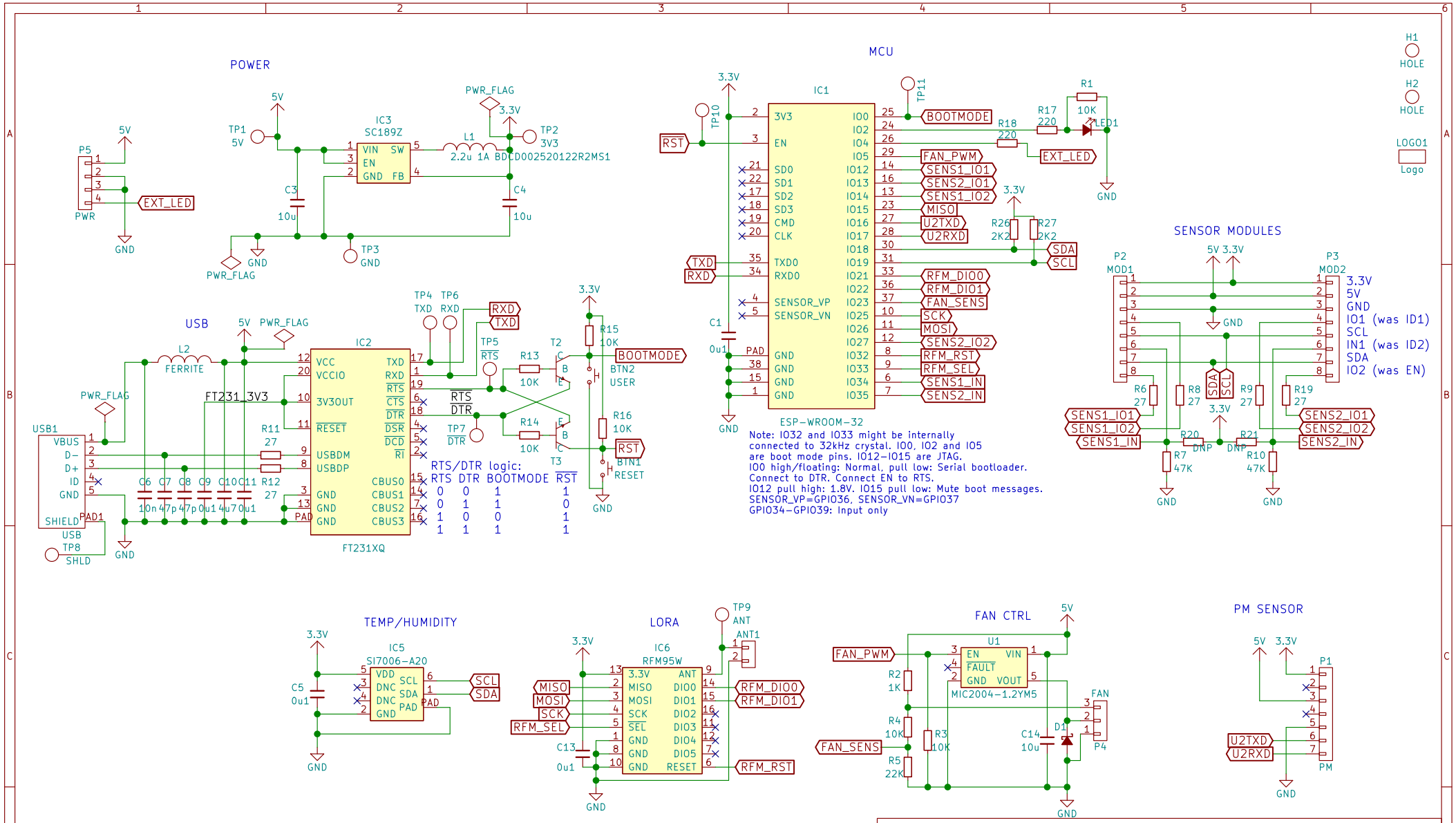

Buck options:
LM3671 / 2.2uH / 4.7uF / 10uF / 600mA
SC189Z / 2.2uH / 4.7uF / 10uF / 1.5A
ADP2108 / 2.2uH / 4.7uF / 10uF / 600mA
MCP1603 / 4.7uH / 4.7uF / 4.7uF / 500mA

Sheet: /
File: openair2.sch

Title:

Size: A4	Date:	Rev:
KiCad E.D.A. kicad 5.1.5+dfsg1-2build2		Id: 1/1