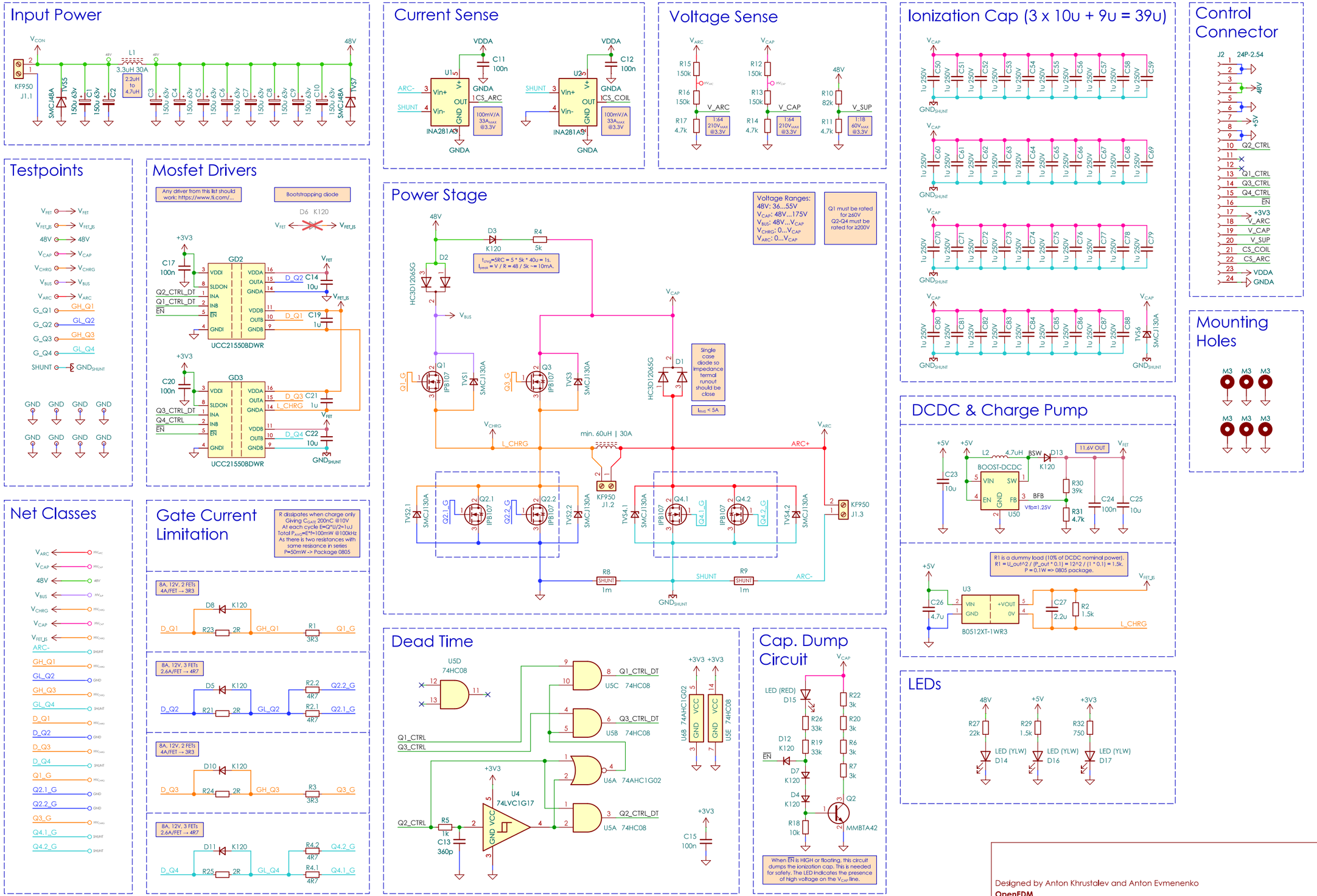
Input Power
Current Sense
Voltage Sense
Ionization Cap (3 x 10u + 9u = 39u)
Control Connector
Testpoints
Mosfet Drivers
Power Stage
Mounting Holes
DCDC & Charge Pump
Net Classes
Gate Current Limitation
Dead Time
Cap. Dump Circuit
LEDs
Designed by Anton Khrustalev and Anton Evmenenko
OpenEDM
Sheet: /
File: openedm_arc_generator.kicad_sch
Title: OpenEDM Arc Generator
Size: A3
Date: 2025-08-28
Rev: 2.1
KiCad E.D.A. 8.0.9
Id: 1/1