INIT

STATE 0: INIT

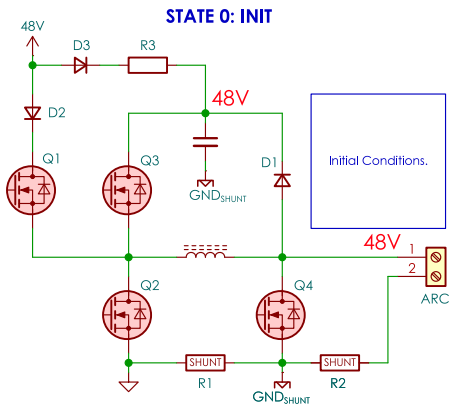

NORMAL OPERATION

STATE 1: INDUCTOR CHARGING

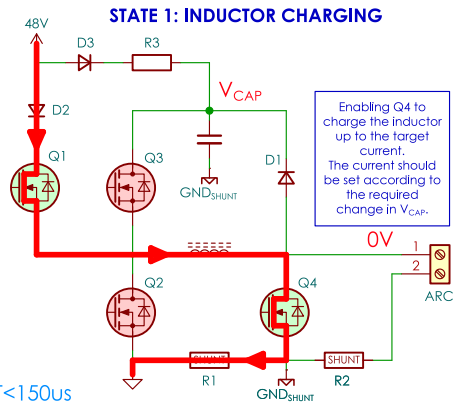

STATE 2: IONIZATION CAP DISCHARGE

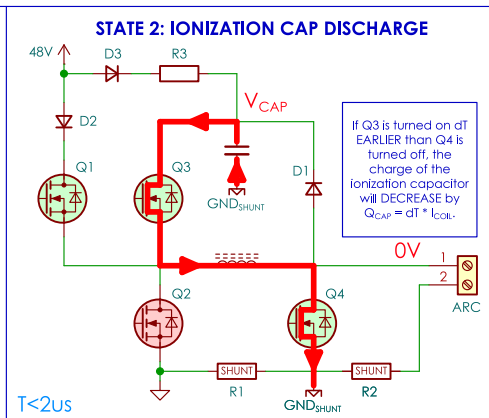

STATE 3: IONIZATION CAP CHARGE

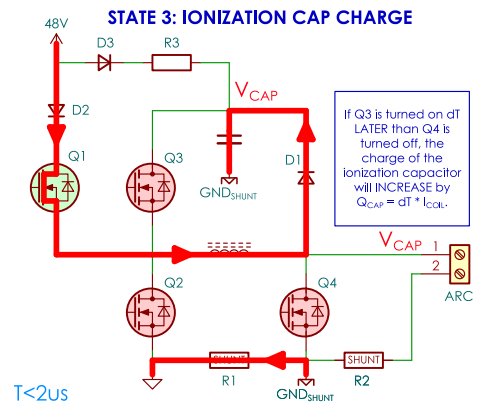

STATE 4: HIGH EFFICIENCY IONIZATION

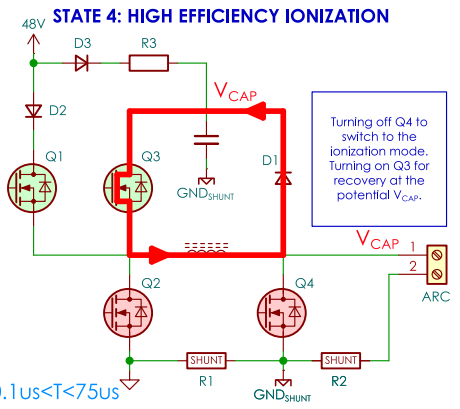

STATE 5: ARC TRANSIENT

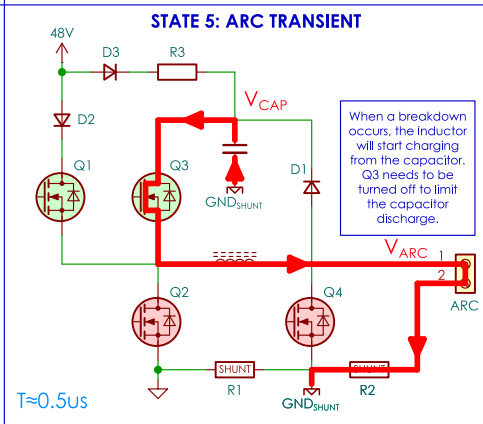

STATE 6: ARC (POWER FROM INDUCTOR & PS)

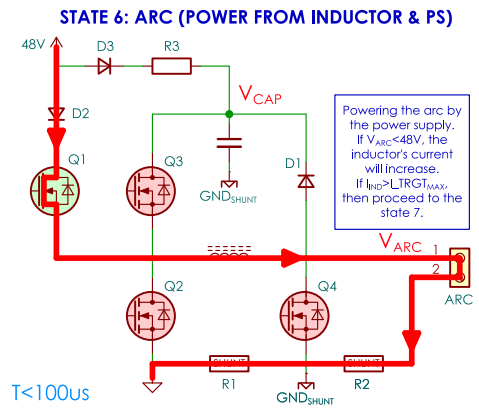

STATE 7: ARC (POWER FROM INDUCTOR)

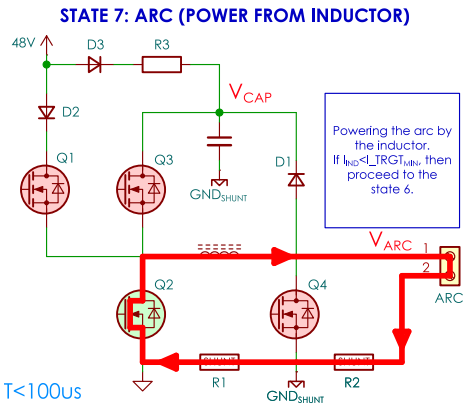

STATE 8: PAUSE

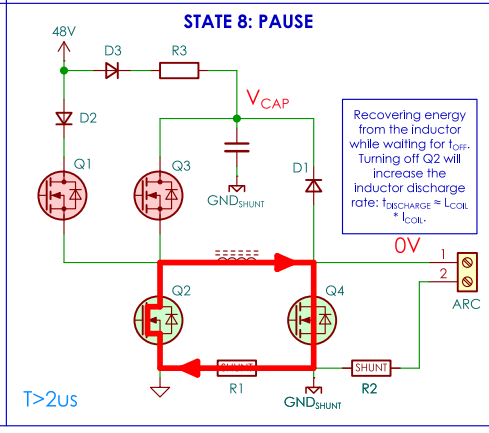

WORKPIECE EDGE DETECTION (SHORT CIRCUIT DETECTION)

STATE 9: WAITING FOR SHORT CIRCUIT

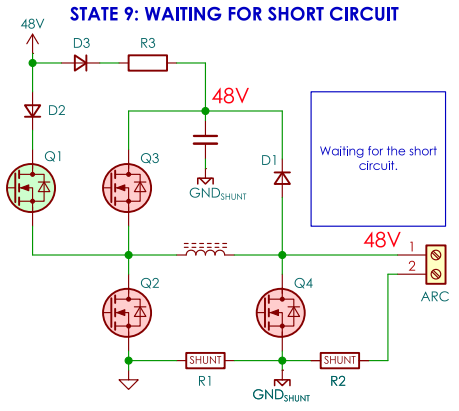

STATE 10: SHORT CIRCUIT DETECTED

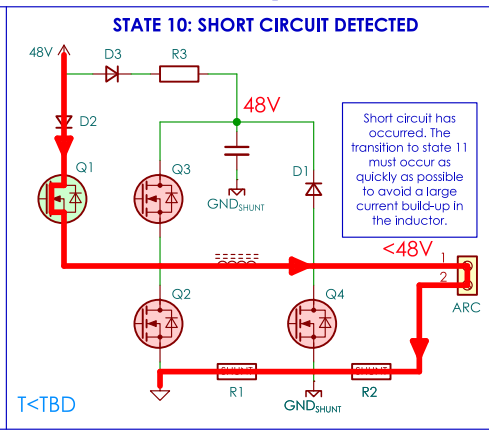

STATE 11: INDUCTOR CURRENT CANCELLATION

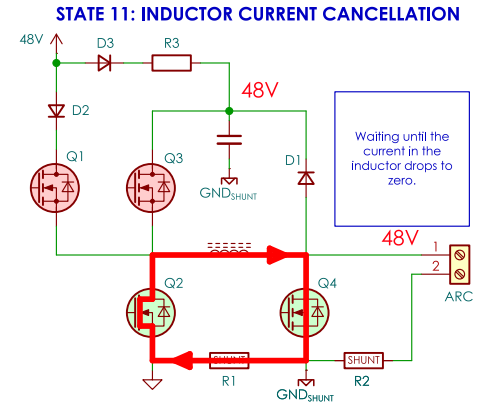

NOTES

1. Alternating between 7 and 2 is allowed if it is necessary to reduce the V_{CAP}.
2. For a very fast discharge of the ionization capacitor, Q1 should be turned off, and then Q2 and Q3 should be turned on simultaneously.
3. For a slow discharge of the ionization capacitor, alternate 2 and 8 with Q2 turned off until the voltage reaches the desired level.

Sheet: /		
File: switching_states.kicad_sch		
Title: OpenEDM Arc Generator		
Size: A3	Date: 2025-10-01	**Rev:**
KiCad E.D.A. 8.0.9		Id: 1/1