BOM Table							
ITEM NO.	PART NUMBER	Rev.	Description	Material	FlameRating	Color	QTY.
1	ML-47BFN*15	-	BASE W/FLANGES & PCB BOSSES	POLYCARBONATE	UL94V-0	LIGHT GRAY (RAL 7035)	1
2	INSERT-3	-	THREADED INSERT #6-32	BRASS			4

Hole Centered from
top of lip to top of flange

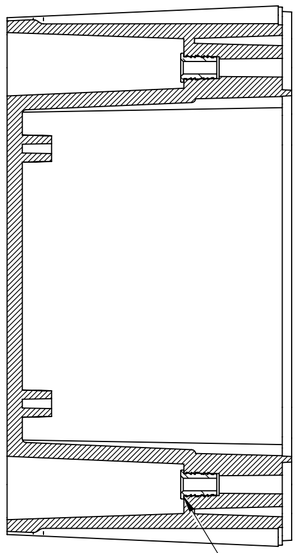

SECTION A-A

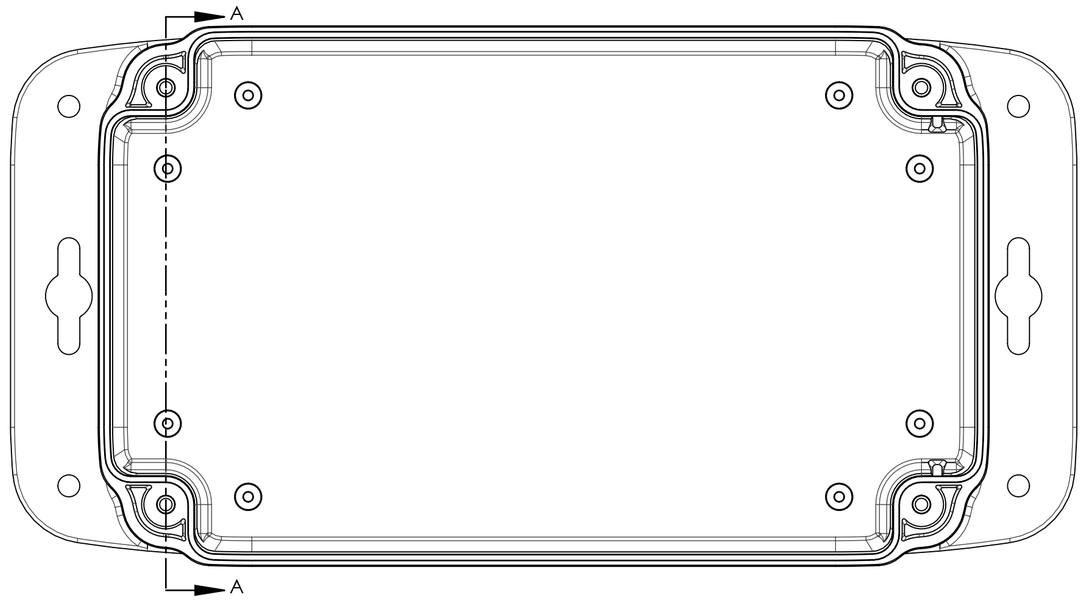

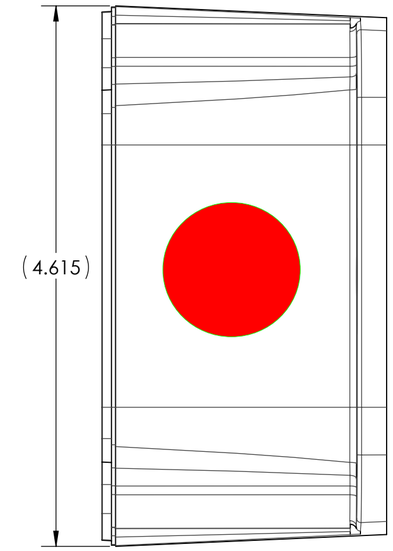

Both Left Side and
Right Side 1.130 for
Polycase CG-16

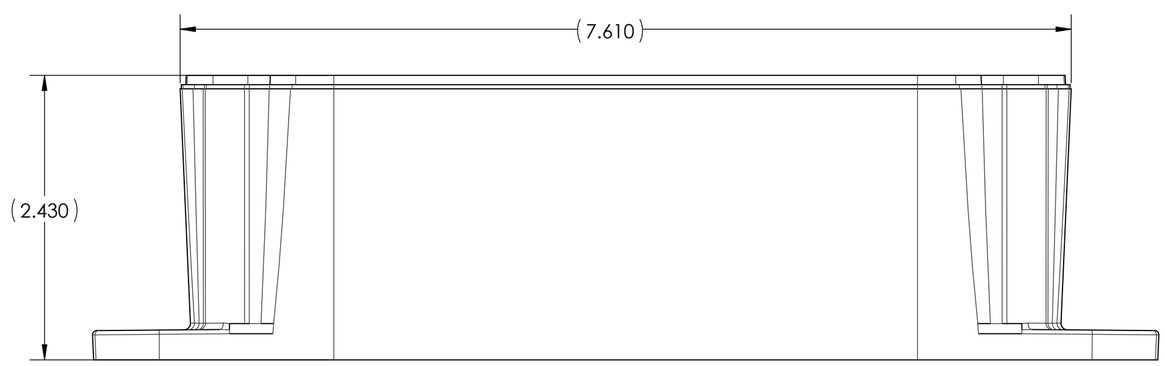

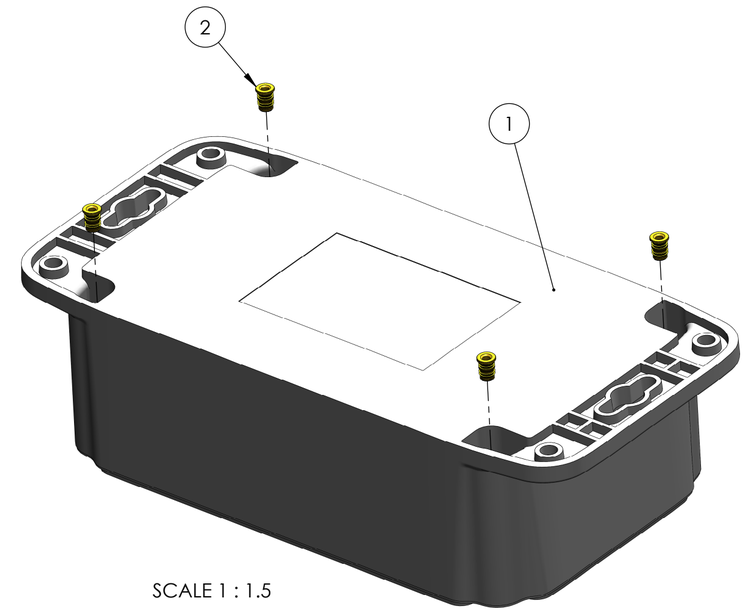

SCALE 1 : 1.5

UNLESS OTHERWISE SPECIFIED:
DIMENSIONS ARE IN: INCHES[mm]
TOLERANCES: ANGULAR: ±2°
TWO PLACE DECIMAL: ±.010
THREE PLACE DECIMAL: ±.005
PRINTED GRAPHICS: ±.010

PROPRIETARY AND CONFIDENTIAL
THE INFORMATION CONTAINED IN THIS DRAWING IS THE SOLE PROPERTY OF POLYCASE. ANY REPRODUCTION IN PART OR AS A WHOLE WITHOUT THE WRITTEN PERMISSION OF POLYCASE IS PROHIBITED.

CAD FILE: ML-47BF

PART NO.
ML-47BF*15

MATERIAL

FLAME RATING
UL94V-0

	NAME	DATE
DRAWN	D.M.F.	11/10/2011
CHECKED	B.M.B.	11/30/2011

polycase
1305 CHESTER IND. PARKWAY AVON, OHIO 44011-1083 U.S.A.
PH#: 1-800-248-1233; 440-934-0444 FAX#: 440-934-0088

BASE W/BRASS INSERTS

SIZE C

REV -

SCALE: 1:1

SHEET 1 OF 1