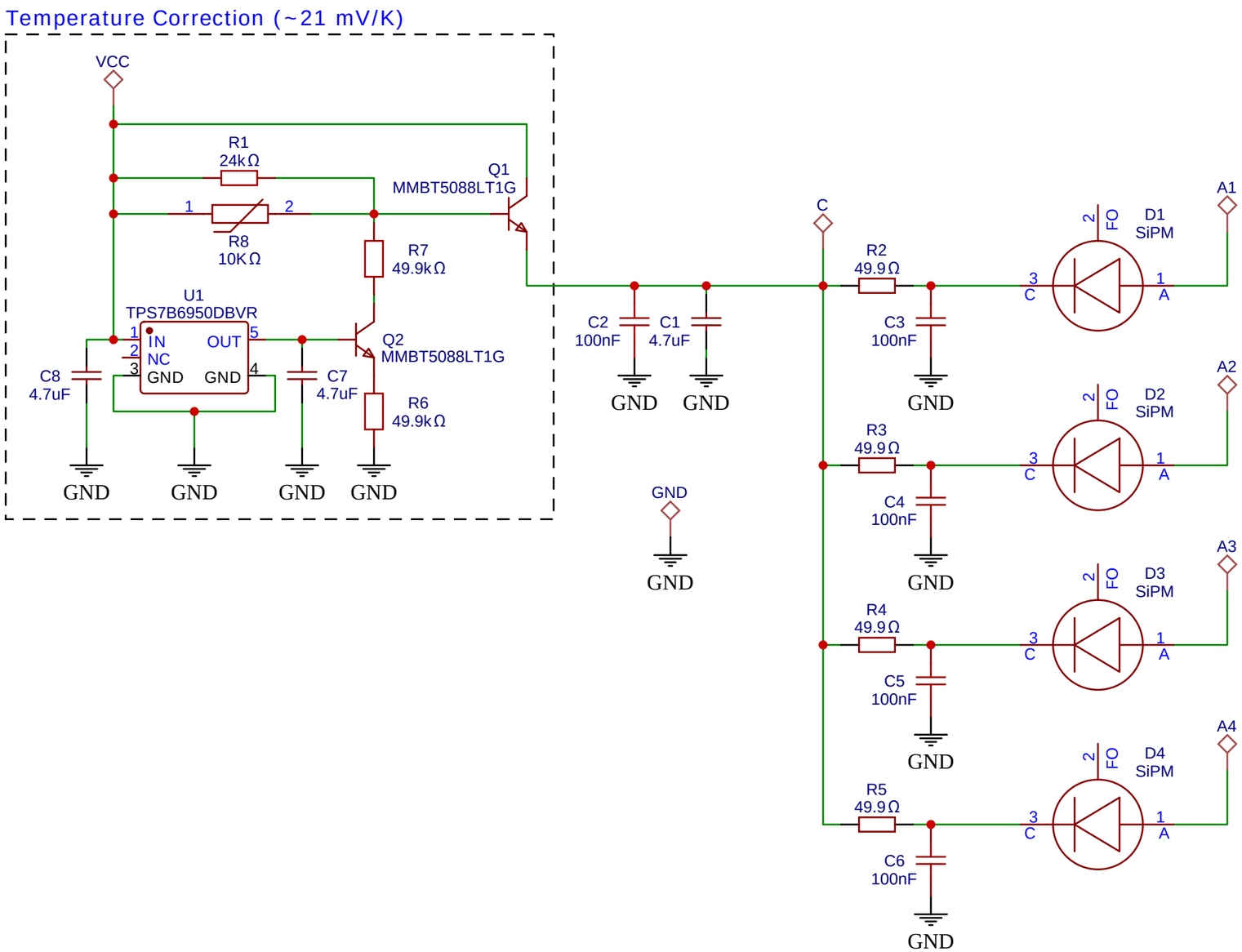

TITLE: MicroFC 2x2 SiPM Carrier Board	REV: 2.1
Company: -	Sheet: 1/1
Date: 2024-02-03 Drawn By: NuclearPhoenix	