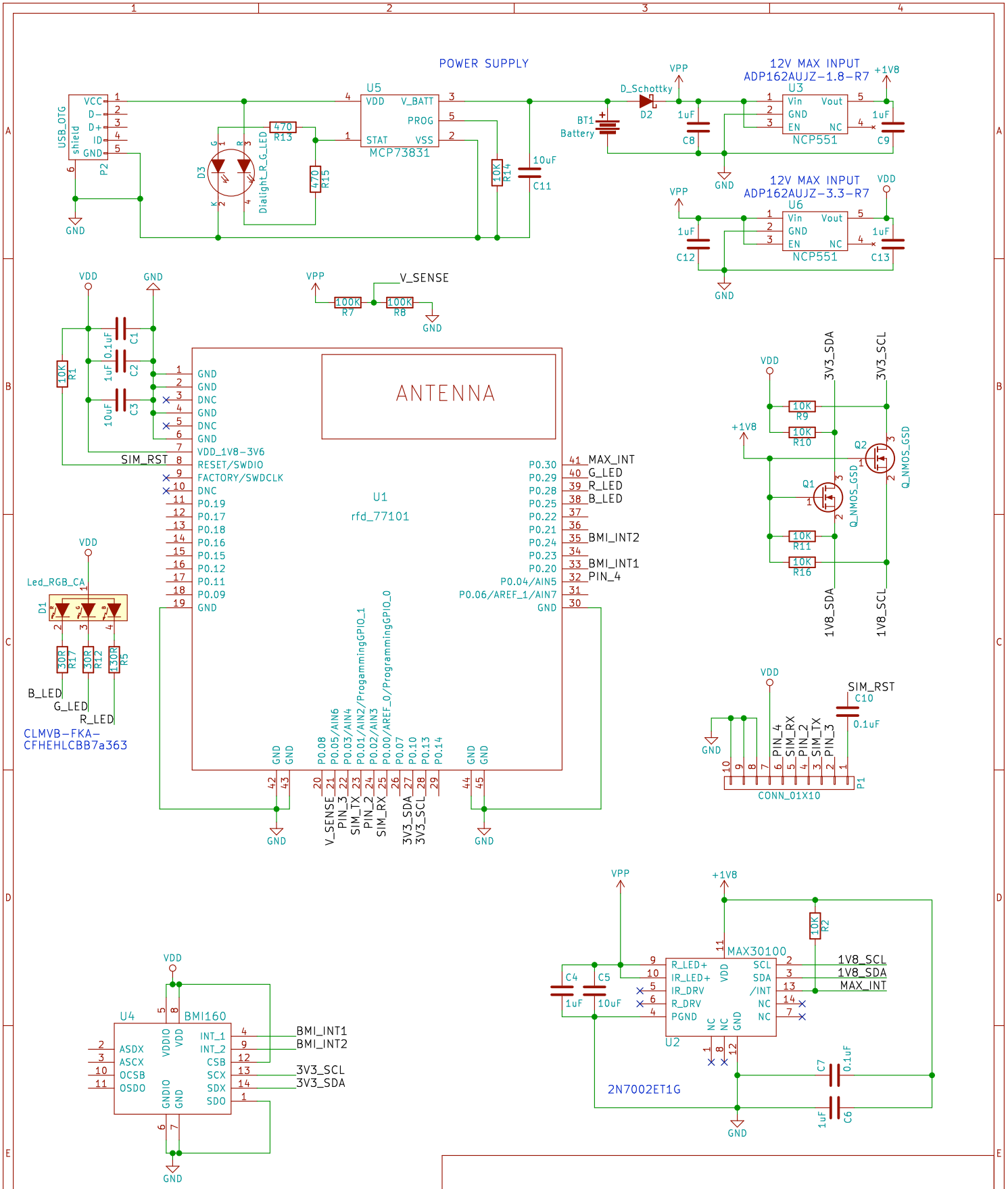


**Solutions Design & Prototyping**

Sheet: /

File: OpenHAK_beta.sch

***Title: OpenHAK beta***

| | | |
|---|---|---|
| Size: A | Date: 7/25/17 | **Rev: 0.1** |
| KiCad E.D.A. eeschema 4.0.0-stable | | Id: 1/1 |