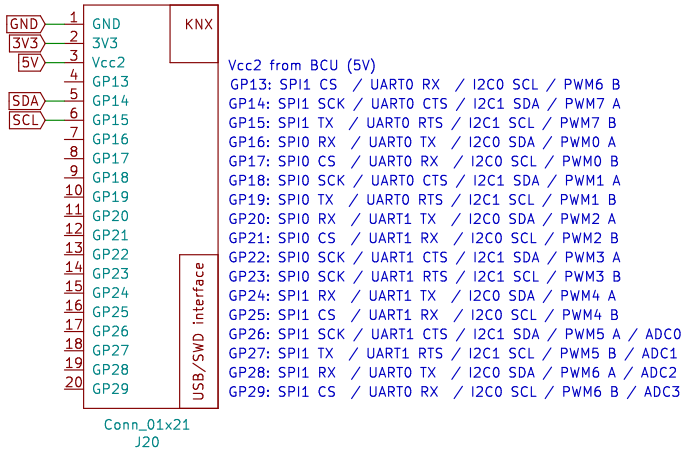

Sheet: dimmer

File: dimmer.sch

https://OpenKNX.de

by SirSydom <com@sirsydom.de>

OpenKNX

Sheet: /

File: LED-UP1-6x24V.sch

Title: DIM-UP1-6x24V

Size: A4	Date: 2022-02-15	**Rev: V00.11**
KiCad E.D.A. eeschema (5.1.4)-1		Id: 1/2

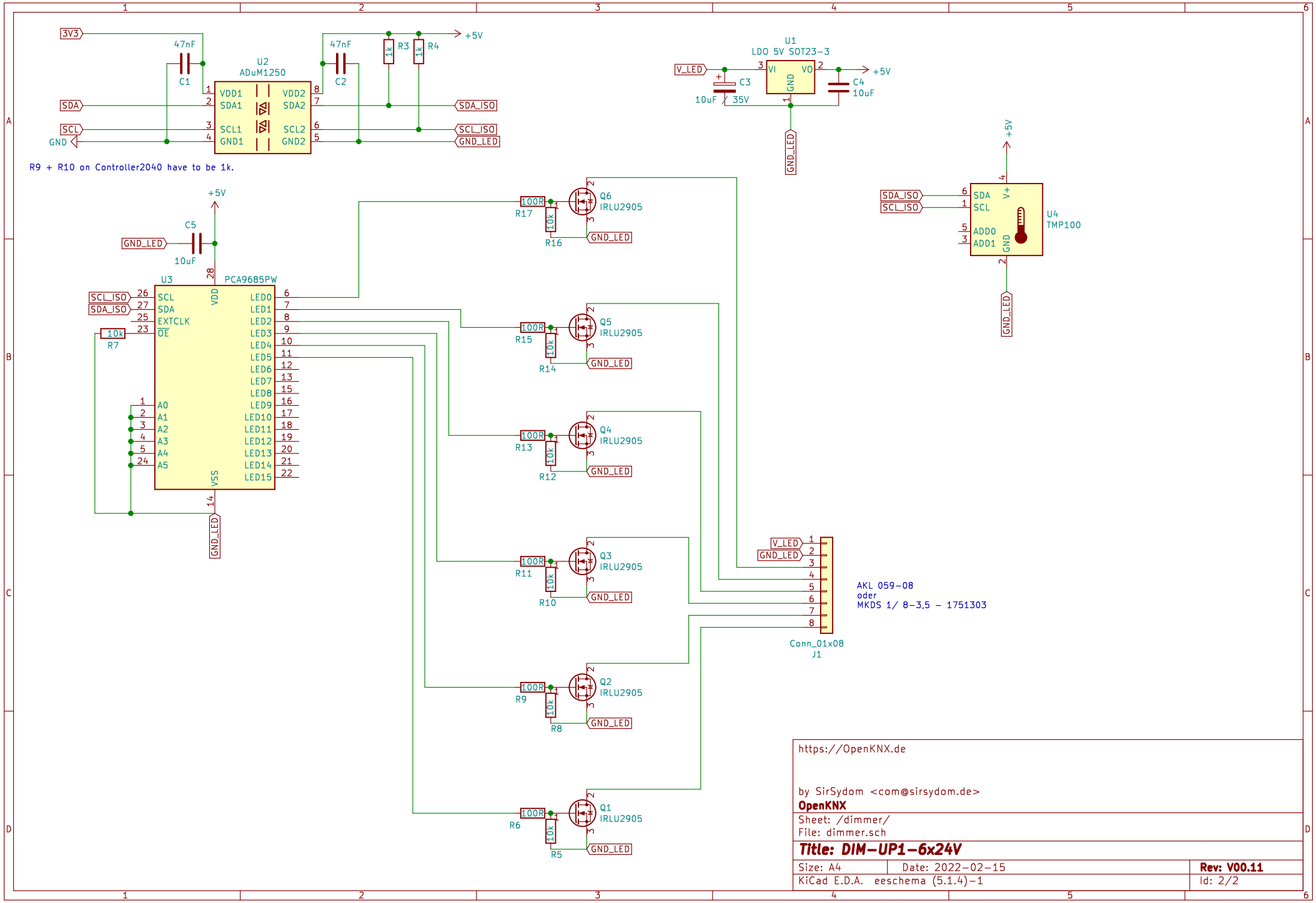
3V3
47nF
C1
U2
ADuM1250
VDD1
SDA1
SCL1
GND1
VDD2
SDA2
SCL2
GND2
SDA
SCL
GND
47nF
C2
1k
R3
1k
R4
+5V
SDA_ISO
SCL_ISO
GND_LED
R9 + R10 on Controller2040 have to be 1k.
U1
LDO 5V SOT23-3
V_LED
VI
VO
GND
C3
10uF / 35V
C4
10uF
+5V
GND_LED
+5V
SDA_ISO
SCL_ISO
SDA
SCL
ADD0
ADD1
V+
GND
U4
TMP100
GND_LED
+5V
C5
GND_LED
10uF
U3
PCA9685PW
SCL_ISO
SDA_ISO
SCL
SDA
EXTCLK
OE
VDD
VSS
10k
R7
LED0
LED1
LED2
LED3
LED4
LED5
LED6
LED7
LED8
LED9
LED10
LED11
LED12
LED13
LED14
LED15
A0
A1
A2
A3
A4
A5
GND_LED
100R
R17
10k
R16
Q6
IRLU2905
GND_LED
100R
R15
10k
R14
Q5
IRLU2905
GND_LED
100R
R13
10k
R12
Q4
IRLU2905
GND_LED
100R
R11
10k
R10
Q3
IRLU2905
GND_LED
100R
R9
10k
R8
Q2
IRLU2905
GND_LED
100R
R6
10k
R5
Q1
IRLU2905
GND_LED
V_LED
GND_LED
Conn_01x08
J1
AKL 059-08
oder
MKDS 1/ 8-3,5 - 1751303
https://OpenKNX.de
by SirSydom <com@sirsydom.de>
OpenKNX
Sheet: /dimmer/
File: dimmer.sch
Title: DIM-UP1-6x24V
Size: A4
Date: 2022-02-15
Rev: V00.11
KiCad E.D.A. eeschema (5.1.4)-1
Id: 2/2