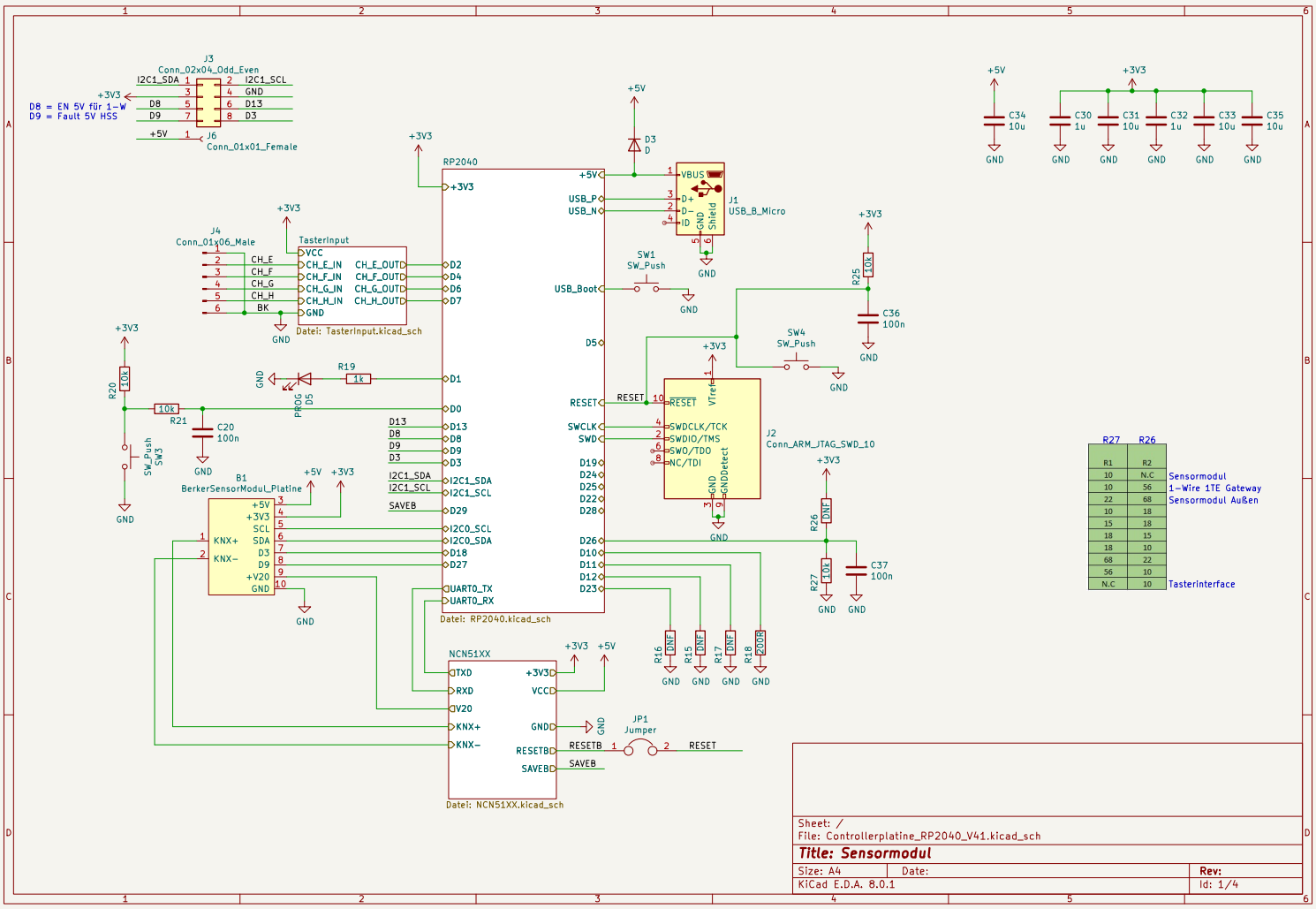
J3
Conn_02x04_Odd_Even
I2C1_SDA
I2C1_SCL
+3V3
GND
D8
D13
D9
D3
D8 = EN 5V für 1-W
D9 = Fault 5V HSS
+5V
J6
Conn_01x01_Female
RP2040
+3V3
+5V
USB_P
USB_N
USB_Boot
D5
RESET
SWCLK
SWD
D19
D24
D25
D22
D28
D26
D10
D11
D12
D23
D0
D1
D2
D4
D6
D7
D13
D8
D9
D3
I2C1_SDA
I2C1_SCL
SAVEB
D29
I2C0_SCL
I2C0_SDA
D18
D27
UART0_TX
UART0_RX
Datei: RP2040.kicad_sch
D3
D
J1
USB_B_Micro
VBUS
D+
D-
ID
GND
Shield
SW1
SW_Push
J4
Conn_01x06_Male
TasterInput
VCC
CH_E
CH_F
CH_G
CH_H
BK
GND
CH_E_IN
CH_F_IN
CH_G_IN
CH_H_IN
CH_E_OUT
CH_F_OUT
CH_G_OUT
CH_H_OUT
Datei: TasterInput.kicad_sch
R19
1k
PROG
D5
R20
10k
R21
10k
C20
100n
SW_Push
SW3
B1
BerkerSensorModul_Platine
KNX+
KNX-
+5V
+3V3
SCL
SDA
D3
D9
+V20
GND
NCN51XX
TXD
RXD
V20
KNX+
KNX-
+3V3
VCC
GND
RESETB
SAVEB
Datei: NCN51XX.kicad_sch
JP1
Jumper
RESETB
RESET
J2
Conn_ARM_JTAG_SWD_10
RESET
VTref
SWDCLK/TCK
SWDIO/TMS
SWO/TDO
NC/TDI
GND
GNDDetect
SW4
SW_Push
R25
10k
C36
100n
R26
DNF
R27
10k
C37
100n
R16
DNF
R15
DNF
R17
DNF
R18
200k
C34
10u
C30
1u
C31
10u
C32
1u
C33
10u
C35
10u
R27 R26
R1 R2
10 N.C Sensormodul
10 56 1-Wire 1TE Gateway
22 68 Sensormodul Außen
10 18
15 18
18 15
18 10
68 22
56 10
N.C 10 TasterInterface
Sheet: /
File: Controllerplatine_RP2040_V41.kicad_sch
Title: Sensormodul
Size: A4
Date:
Rev:
KiCad E.D.A. 8.0.1
Id: 1/4

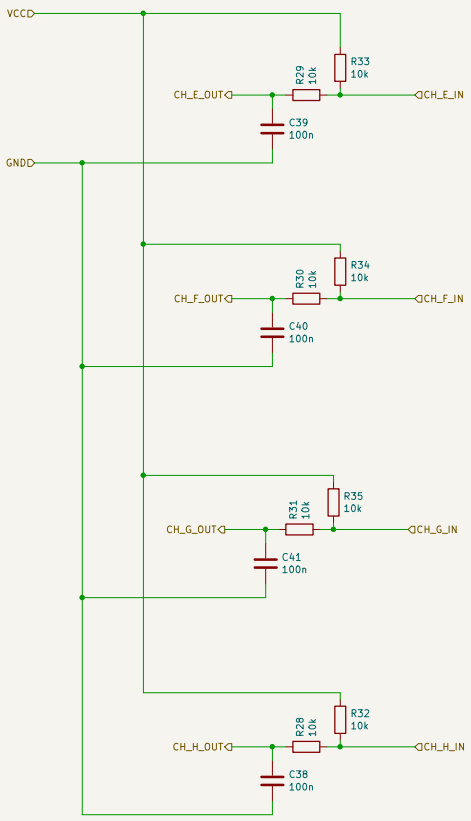

Sheet: /TasterInput/
File: TasterInput.kicad_sch

Title:

Size: A4	Date:	Rev:
KiCad E.D.A. 8.0.1		Id: 1/4

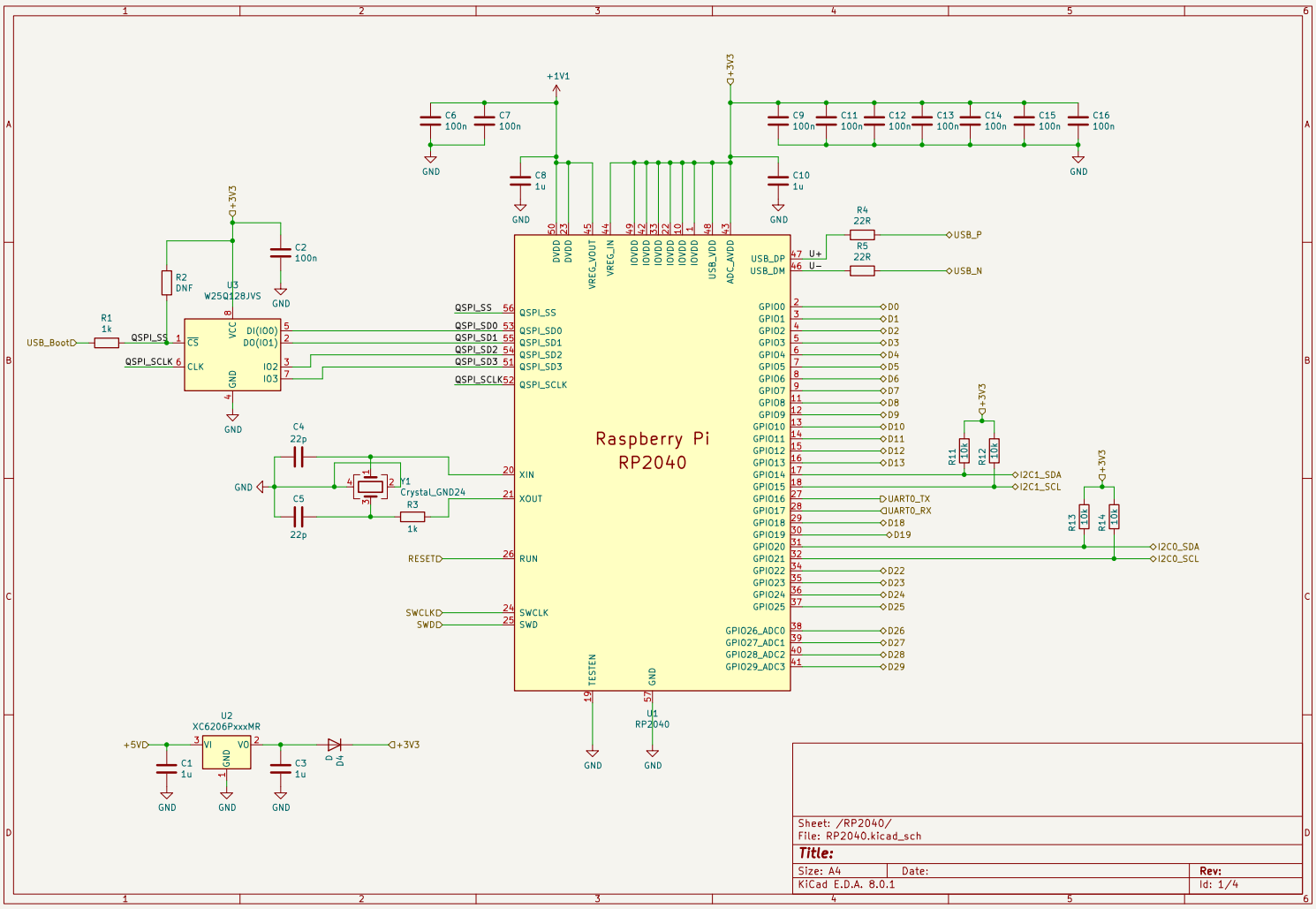

Sheet: /RP2040/
File: RP2040.kicad_sch

Title:

Size: A4	Date:	Rev:
KiCad E.D.A. 8.0.1		Id: 1/4

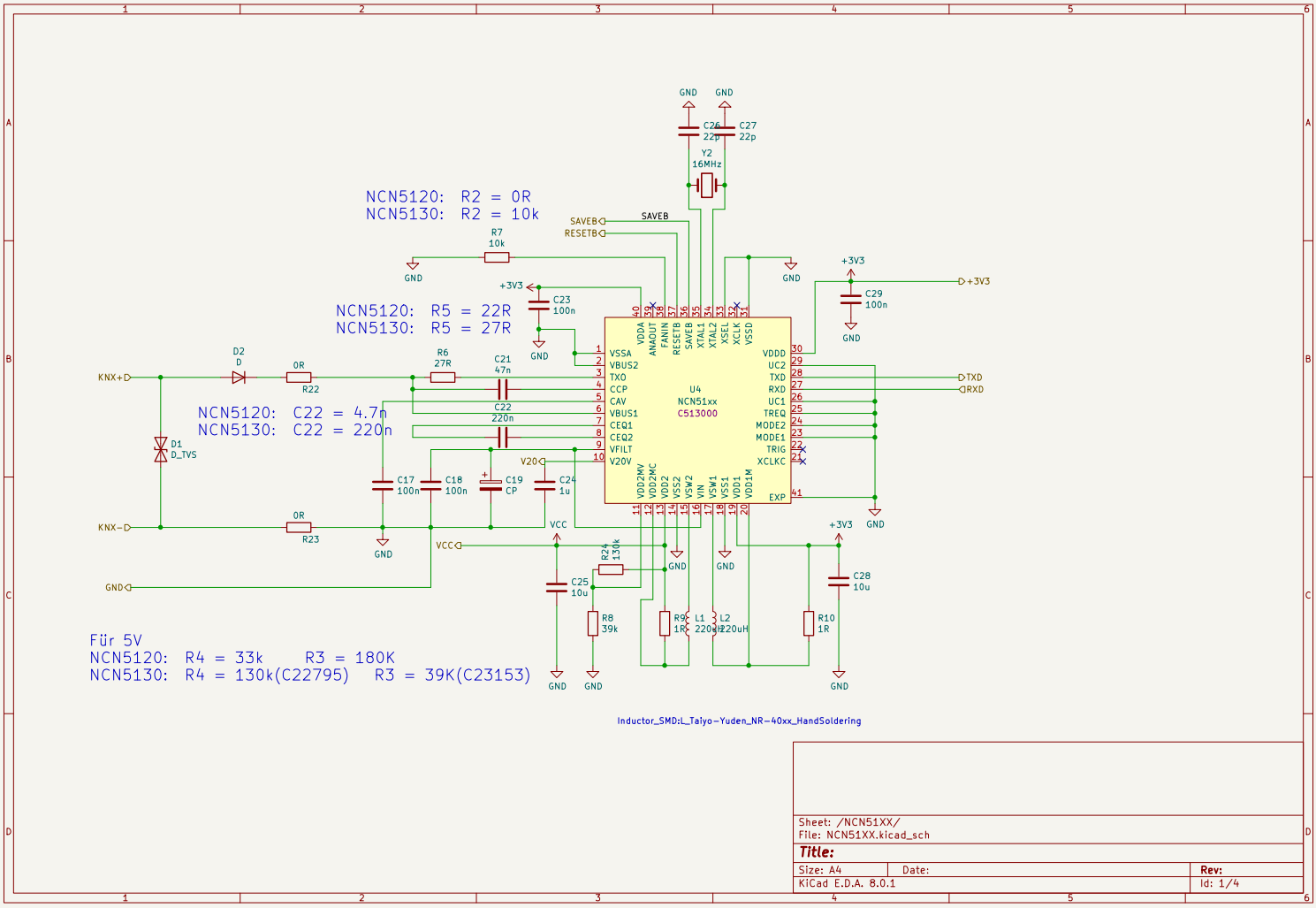

Sheet: /NCN51XX/
File: NCN51XX.kicad_sch

Title:

Size: A4	Date:	Rev:
KiCad E.D.A. 8.0.1		Id: 1/4