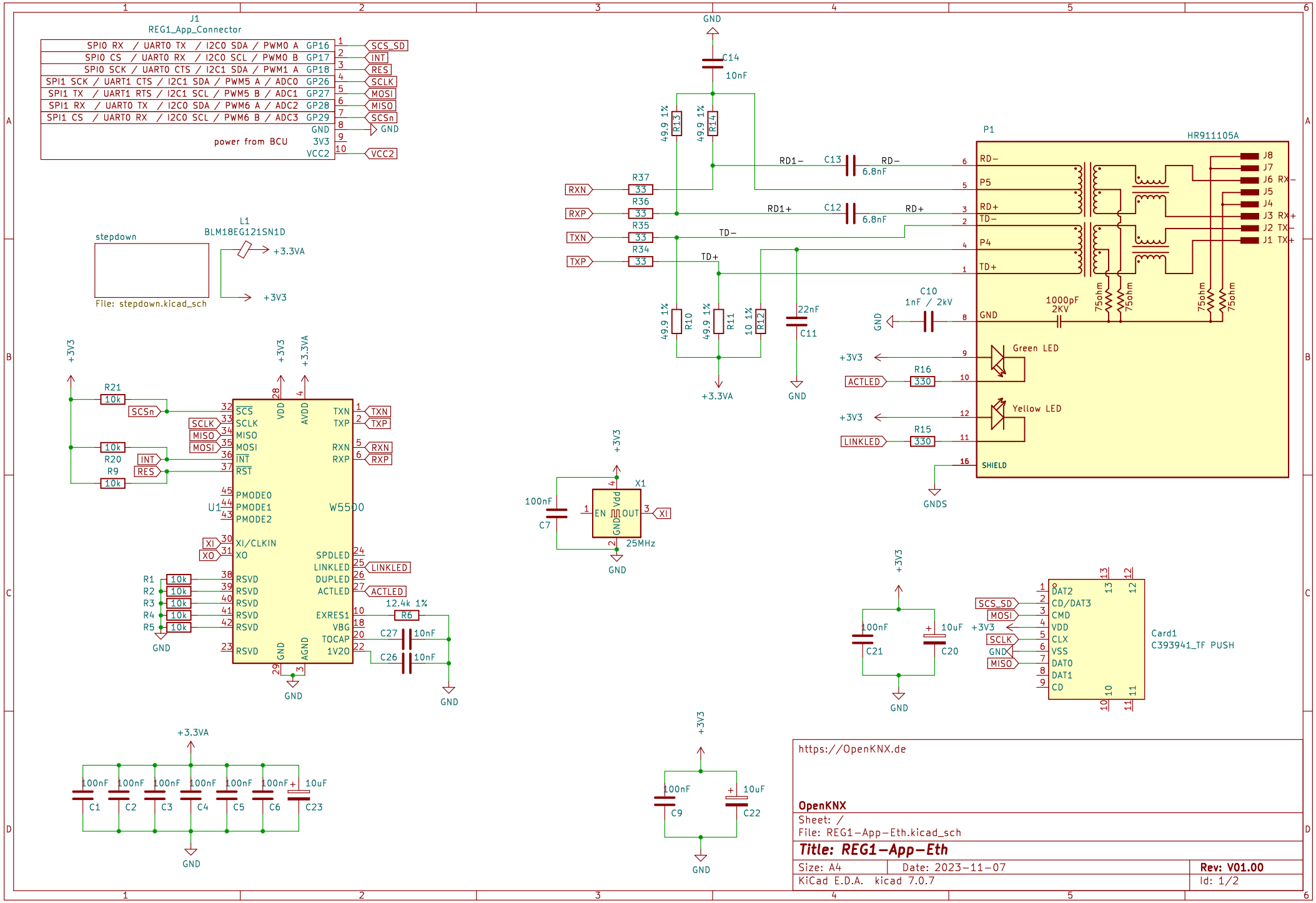
J1
REG1_App_Connector
SPI0 RX / UART0 TX / I2C0 SDA / PWM0 A GP16
SPI0 CS / UART0 RX / I2C0 SCL / PWM0 B GP17
SPI0 SCK / UART0 CTS / I2C1 SDA / PWM1 A GP18
SPI1 SCK / UART1 CTS / I2C1 SDA / PWM5 A / ADC0 GP26
SPI1 TX / UART1 RTS / I2C1 SCL / PWM5 B / ADC1 GP27
SPI1 RX / UART0 TX / I2C0 SDA / PWM6 A / ADC2 GP28
SPI1 CS / UART0 RX / I2C0 SCL / PWM6 B / ADC3 GP29
GND
power from BCU 3V3
VCC2
SCS_SD
INT
RES
SCLK
MOSI
MISO
SCSn
GND
VCC2
stepdown
File: stepdown.kicad_sch
L1
BLM18EG121SN1D
+3.3VA
+3V3
U1
W5500
SCS
SCLK
MISO
MOSI
INT
RST
PMODE0
PMODE1
PMODE2
XI/CLKIN
XO
RSVD
VDD
AVDD
GND
AGND
TXN
TXP
RXN
RXP
SPDLED
LINKLED
DUPLED
ACTLED
EXRES1
VBG
TOCAP
1V20
R21 10k
R20 10k
R9 10k
R1 10k
R2 10k
R3 10k
R4 10k
R5 10k
R6 12.4k 1%
C27 10nF
C26 10nF
C1 100nF
C2 100nF
C3 100nF
C4 100nF
C5 100nF
C6 100nF
C23 10uF
C14 10nF
R13 49.9 1%
R14 49.9 1%
R37 33
R36 33
R35 33
R34 33
RD1−
RD1+
TD−
TD+
C13 6.8nF
C12 6.8nF
R10 49.9 1%
R11 49.9 1%
R12 10 1%
C11 22nF
P1
HR911105A
RD−
P5
RD+
TD−
P4
TD+
GND
SHIELD
J8
J7
J6 RX−
J5
J4
J3 RX+
J2 TX−
J1 TX+
C10 1nF / 2kV
1000pF 2KV
75ohm
Green LED
Yellow LED
R16 330
R15 330
ACTLED
LINKLED
GNDS
X1
EN
OUT
Vdd
25MHz
C7 100nF
C21 100nF
C20 10uF
Card1
C393941_TF PUSH
DAT2
CD/DAT3
CMD
VDD
CLK
VSS
DAT0
DAT1
CD
C9 100nF
C22 10uF
https://OpenKNX.de
OpenKNX
Sheet: /
File: REG1−App−Eth.kicad_sch
Title: REG1−App−Eth
Size: A4
Date: 2023−11−07
Rev: V01.00
KiCad E.D.A. kicad 7.0.7
Id: 1/2

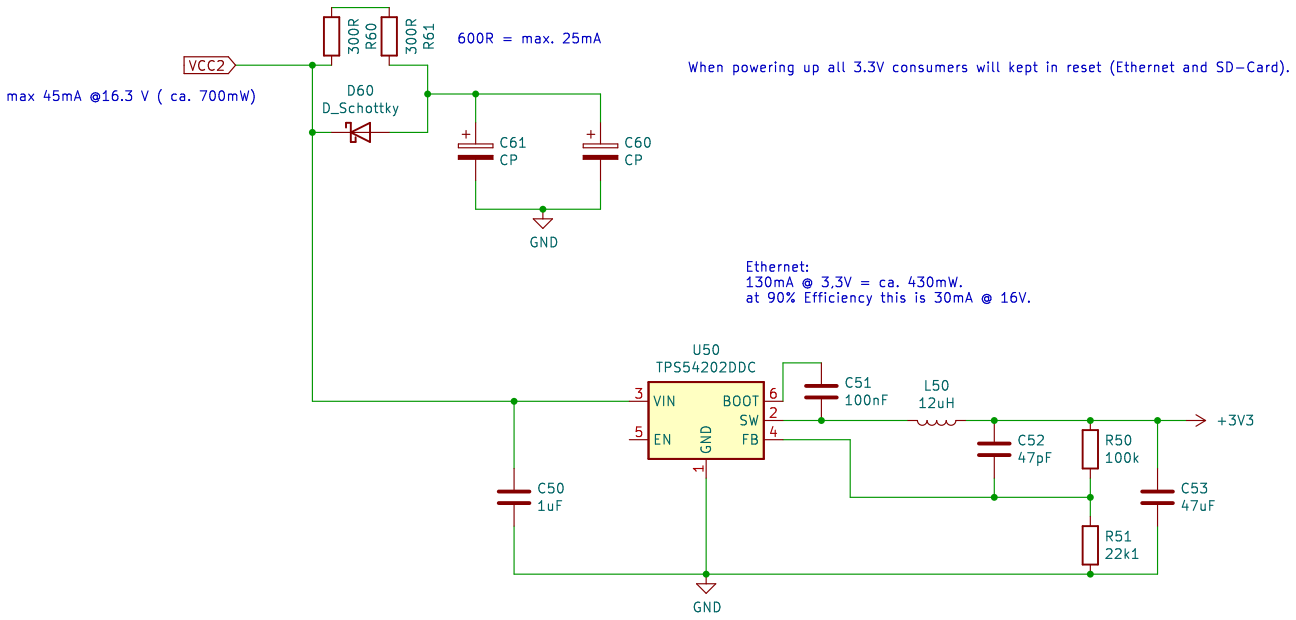

Sheet: /stepdown/
File: stepdown.kicad_sch

Title: REG1-App-Eth

Size: A4	Date: 2023-11-07	**Rev: V01.00**
KiCad E.D.A. kicad 7.0.7		Id: 2/2