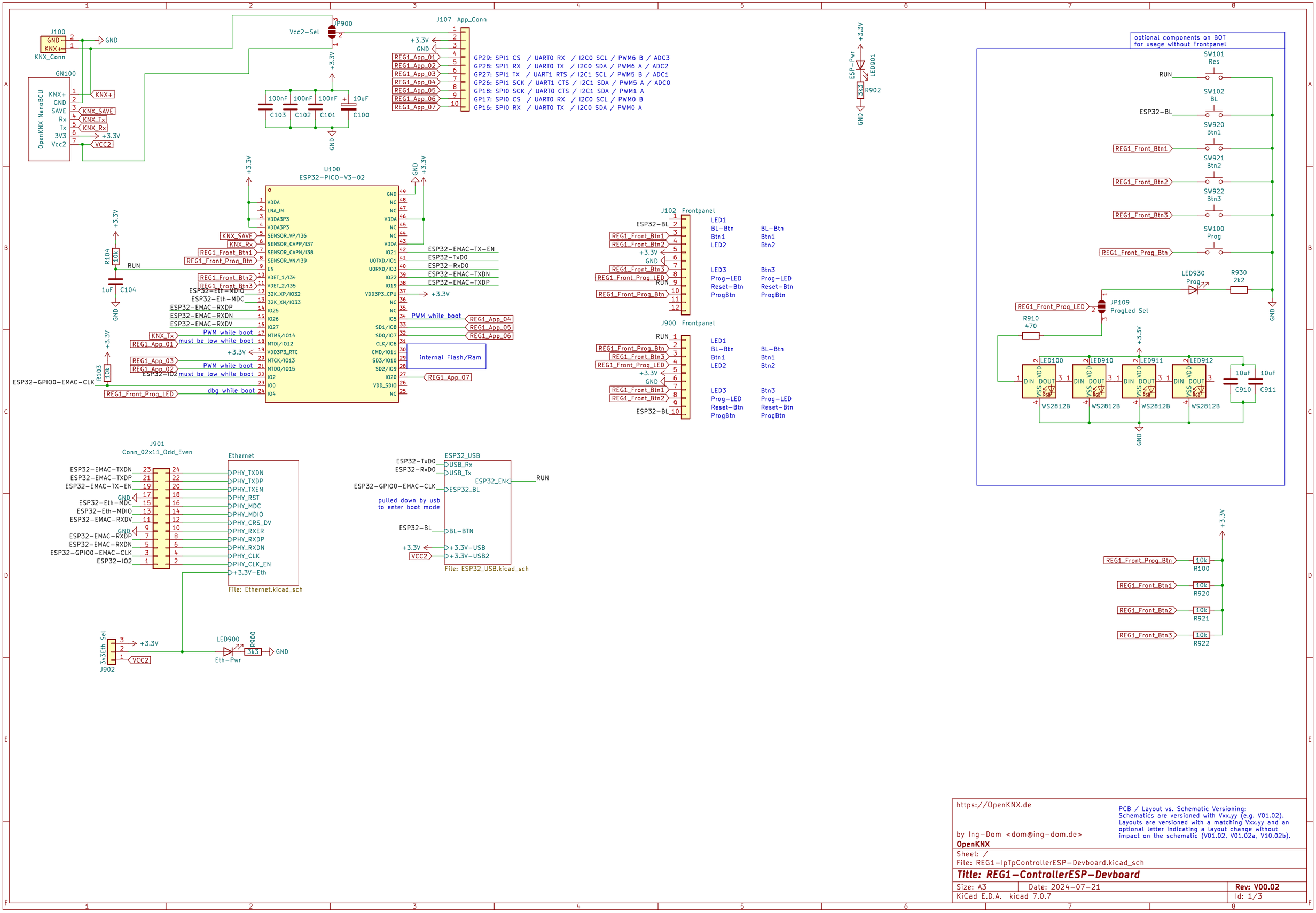

https://OpenKNX.de

by Ing-Dom <dom@ing-dom.de>

OpenKNX

PCB / Layout vs. Schematic Versioning:
Schematics are versioned with Vxx.yy (e.g. V01.02).
Layouts are versioned with a matching Vxx.yy and an optional letter indicating a layout change without impact on the schematic (V01.02, V01.02a, V10.02b).

Sheet: /
File: REG1-IpTpControllerESP-Devboard.kicad_sch

Title: REG1-ControllerESP-Devboard

Size: A3	Date: 2024-07-21	**Rev: V00.02**
KiCad E.D.A. kicad 7.0.7		Id: 1/3

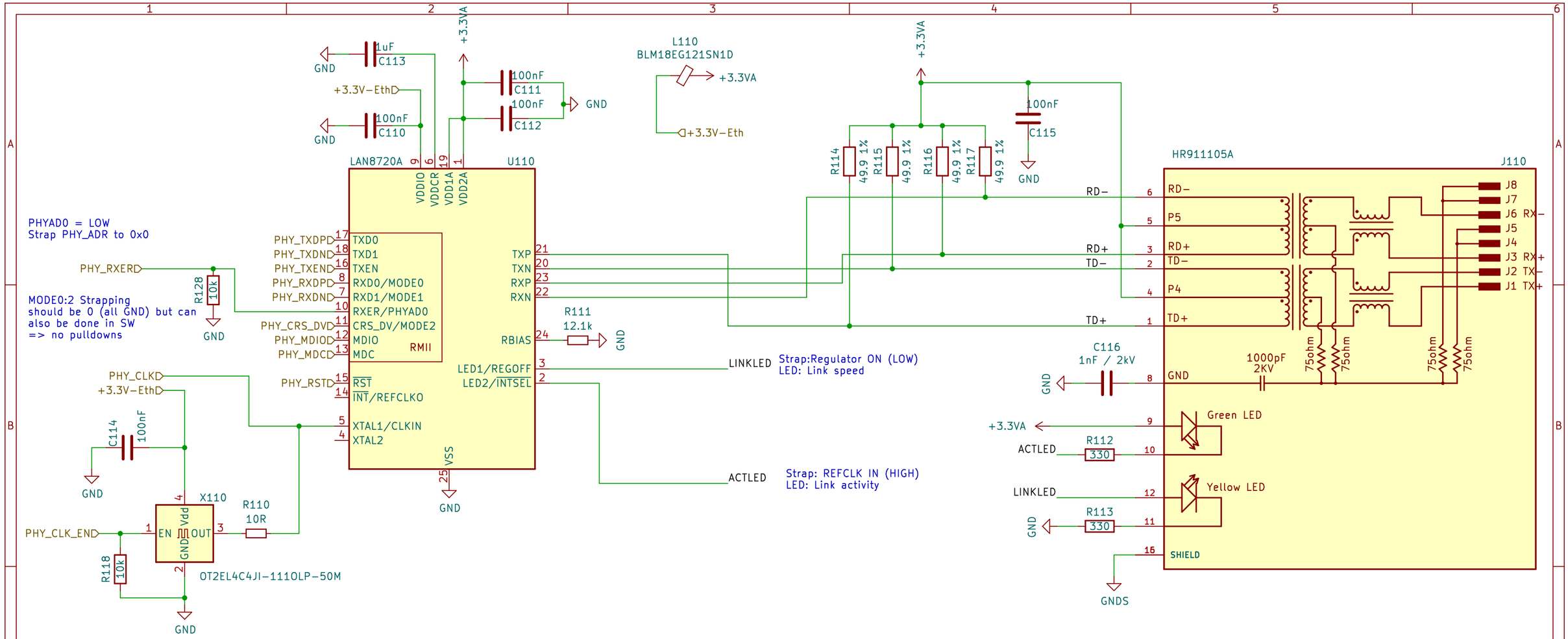

https://OpenKNX.de

by Ing-Dom <dom@ing-dom.de>
OpenKNX

Sheet: /Ethernet/
File: Ethernet.kicad_sch

Title: REG1-ControllerESP-Devboard

Size: A4	Date: 2024-07-21	**Rev: V00.02**
KiCad E.D.A. kicad 7.0.7		Id: 3/3

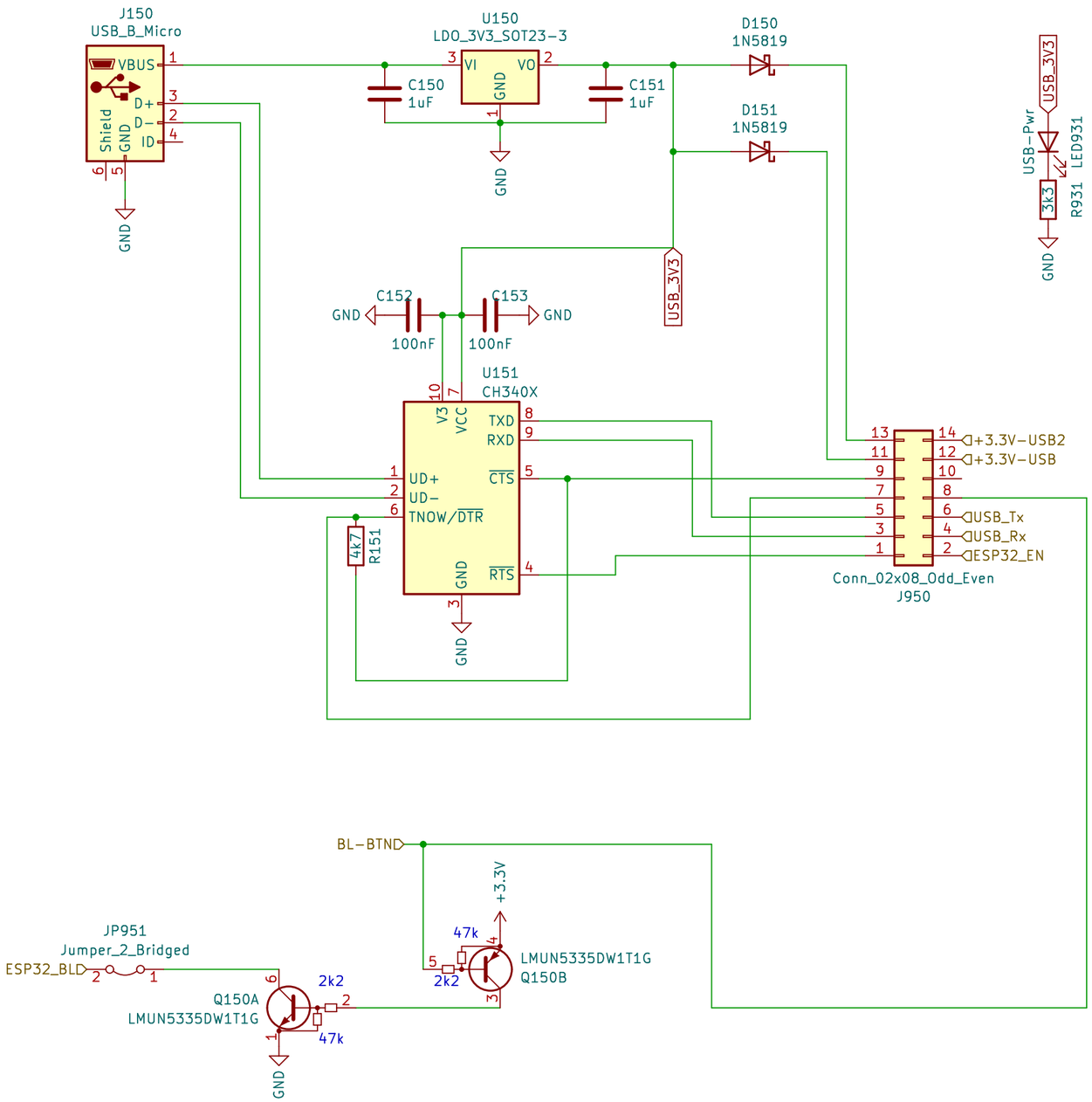

Sheet: /ESP32_USB/
File: ESP32_USB.kicad_sch

Title: REG1-ControllerESP-Devboard

Size: A4	Date: 2024-07-21	Rev: V00.02
KiCad E.D.A. kicad 7.0.7		Id: 4/3