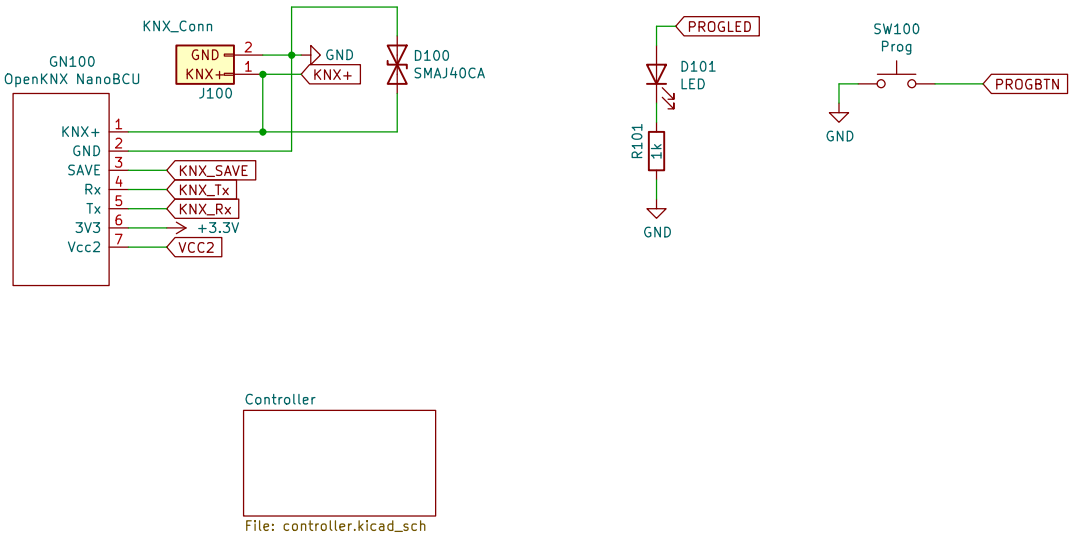

https://OpenKNX.de

by Ing-Dom <dom@ing-dom.de>
OpenKNX

Sheet: /
File: UP1-Controller2040.kicad_sch

Title: UP1-Controller2040

Size: A4	Date: 2024-03-01	**Rev: V01.00**
KiCad E.D.A. 8.0.8		Id: 1/2

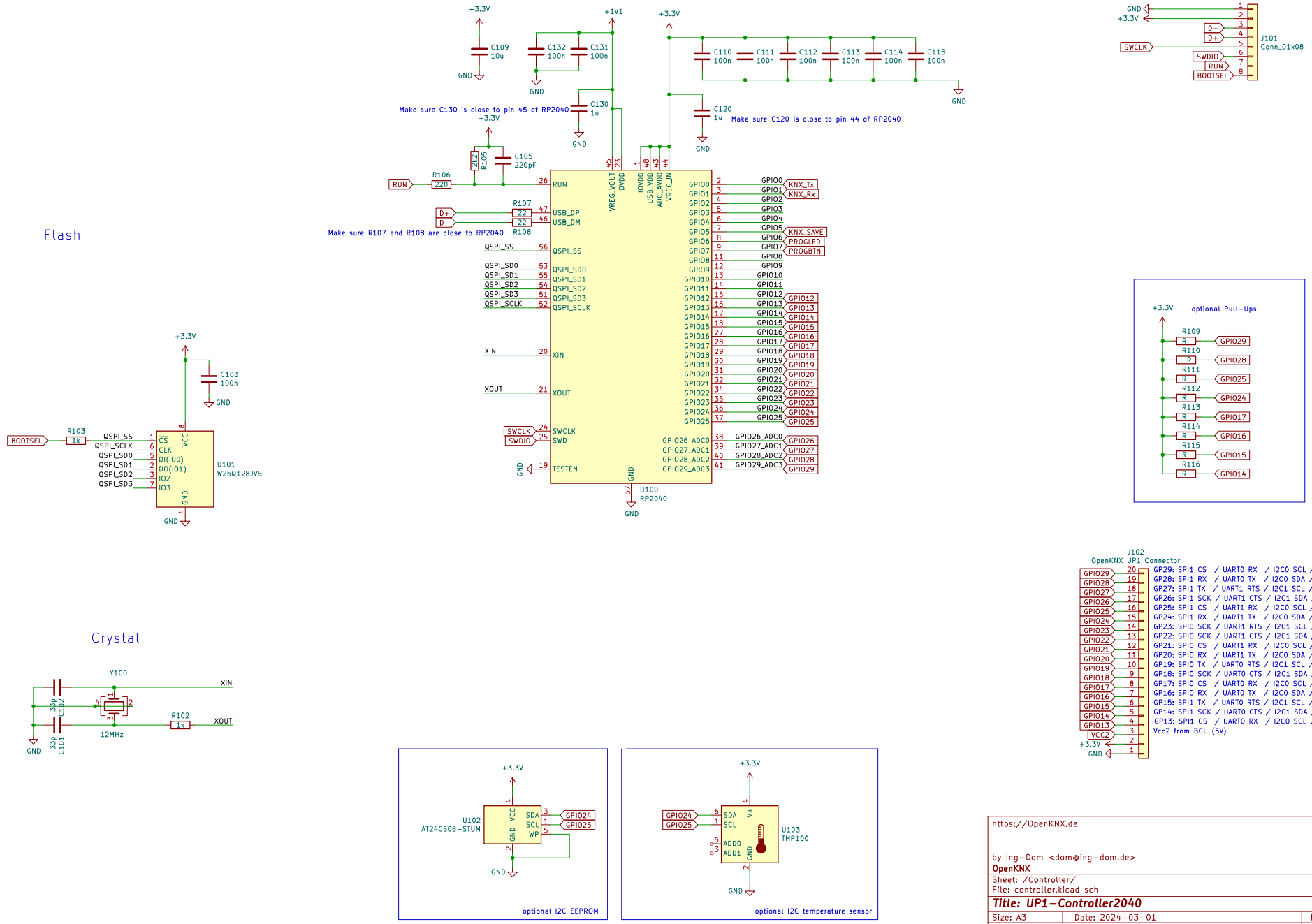

https://OpenKNX.de

by Ing-Dom <dom@ing-dom.de>

OpenKNX

Sheet: /Controller/

File: controller.kicad_sch

Title: UP1-Controller2040

Size: A3	Date: 2024-03-01	**Rev: V01.00**
KiCad E.D.A. 8.0.8		Id: 2/2