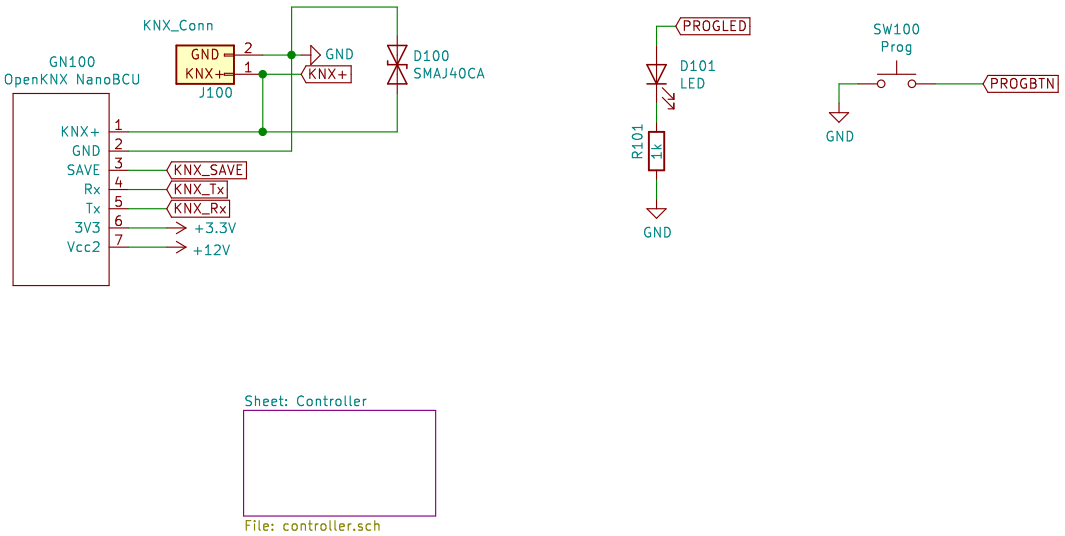

https://OpenKNX.de

by SirSydom <com@sirsydom.de>

OpenKNX

Sheet: /
File: UP1-Controller2040.sch

Title: UP1-Controller2040

Size: A4	Date: 2022-02-10	**Rev: V00.02**
KiCad E.D.A. kicad (5.1.4)-1		Id: 1/2

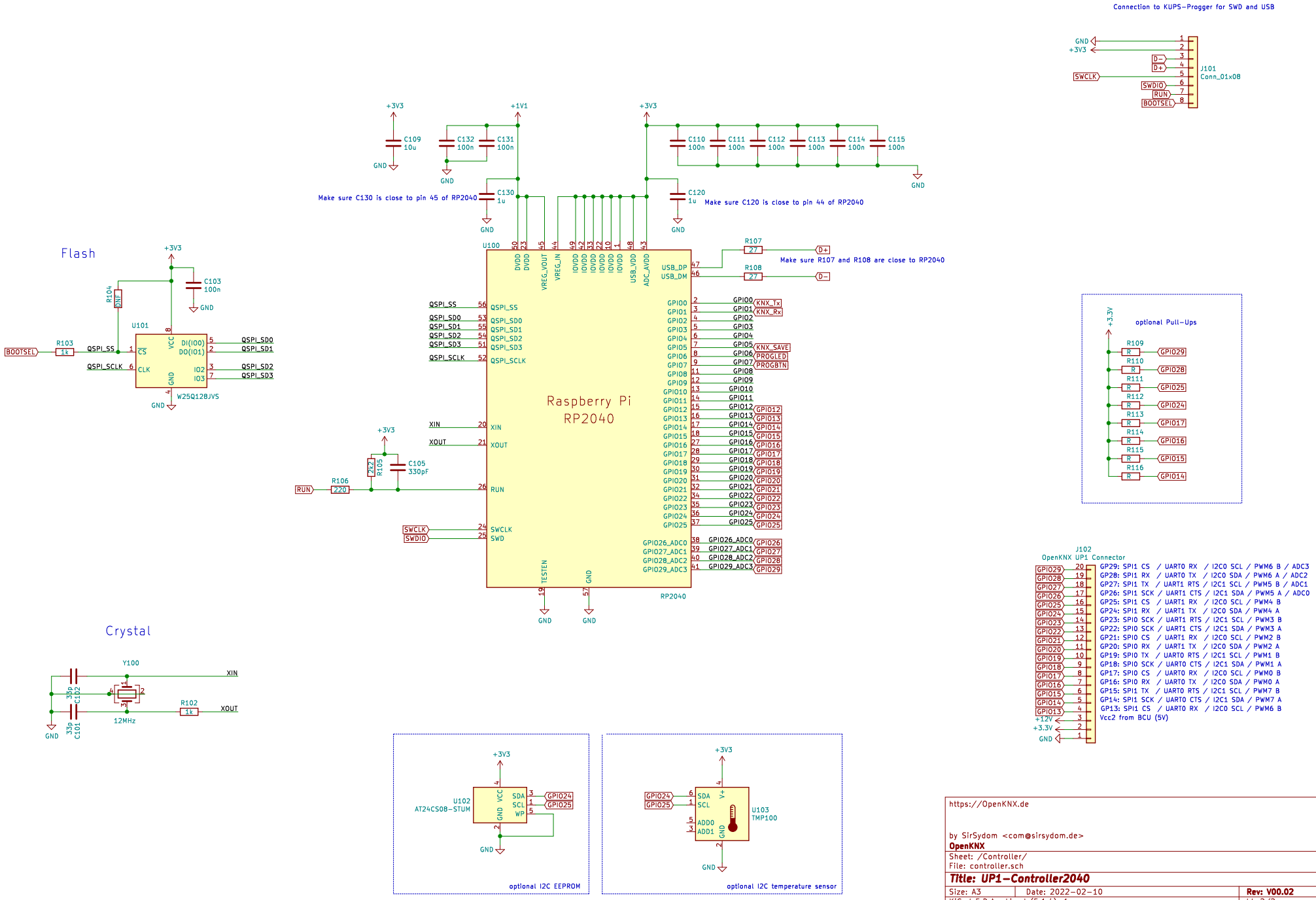

https://OpenKNX.de

by SirSydom <com@sirsydom.de>

OpenKNX

Sheet: /Controller/

File: controller.sch

Title: UP1-Controller2040

Size: A3	Date: 2022-02-10	**Rev: V00.02**
KiCad E.D.A. kicad (5.1.4)-1		Id: 2/2