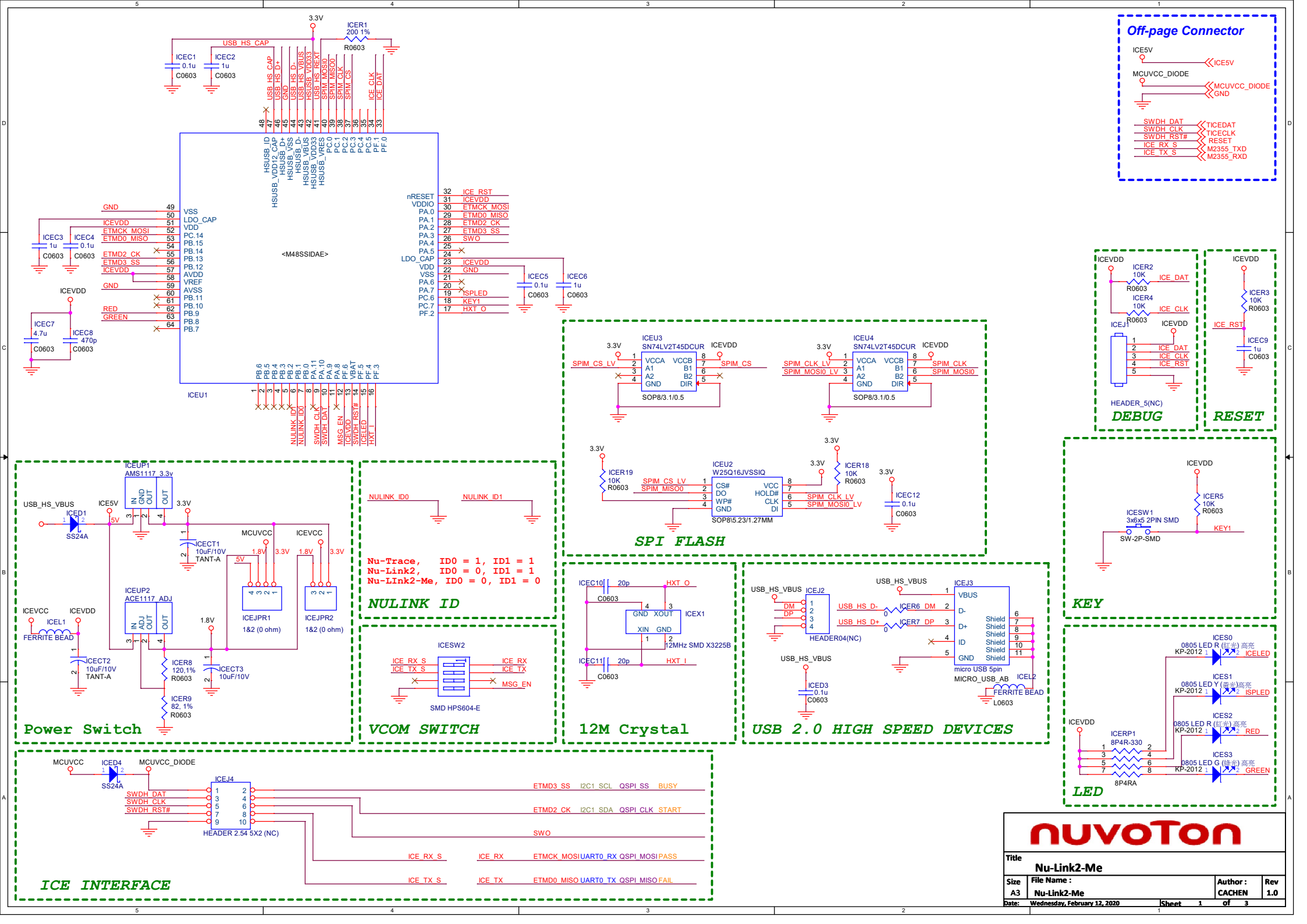

Off-page Connector
ICE5V
MCUVCC_DIODE
GND
SWDH_DAT
SWDH_CLK
SWDH_RST#
ICE_RX_S
ICE_TX_S
TICEDAT
TICECLK
RESET
M2355_TXD
M2355_RXD
3.3V
ICER1
200 1%
R0603
USB_HS_CAP
ICEC1
0.1u
C0603
ICEC2
1u
C0603
USB_HS_CAP
USB_HS_D+
GND
USB_HS_D-
USB_HS_VBUS
HSUSB_VDD33
USB_HS_REXT
SPIM_MOSI0
SPIM_MISO0
SPIM_CLK
SPIM_CS
ICE_CLK
ICE_DAT
HSUSB_ID
HSUSB_VDD12_CAP
HSUSB_D+
HSUSB_VSS
HSUSB_D-
HSUSB_VBUS
HSUSB_VDD33
HSUSB_VRES
PC.0
PC.1
PC.2
PC.3
PC.4
PC.5
PF.1
PF.0
<M48SSIDAE>
ICEU1
VSS
LDO_CAP
VDD
PC.14
PB.15
PB.14
PB.13
PB.12
AVDD
VREF
AVSS
PB.11
PB.10
PB.9
PB.8
PB.7
nRESET
VDDIO
PA.0
PA.1
PA.2
PA.3
PA.4
PA.5
LDO_CAP
VDD
VSS
PA.6
PA.7
PC.6
PC.7
PF.2
ICE_RST
ICEVDD
ETMCK_MOSI
ETMD0_MISO
ETMD2_CK
ETMD3_SS
SWO
ISPLED
KEY1
HXT_O
GND
ICEVDD
ETMCK_MOSI
ETMD0_MISO
ETMD2_CK
ETMD3_SS
ICEVDD
GND
RED
GREEN
ICEC3
1u
C0603
ICEC4
0.1u
C0603
ICEC5
0.1u
C0603
ICEC6
1u
C0603
ICEC7
4.7u
C0603
ICEC8
470p
C0603
PB.6
PB.5
PB.4
PB.3
PB.2
PB.1
PB.0
PA.11
PA.10
PA.9
PA.8
PF.6
VBAT
PF.5
PF.4
PF.3
NULINK_ID1
NULINK_ID0
SWDH_CLK
SWDH_DAT
MSG_EN
ICEVDD
SWDH_RST#
ICELED
HXT_I
ICEU3
SN74LV2T45DCUR
SOP8/3.1/0.5
VCCA
VCCB
A1
B1
A2
B2
GND
DIR
SPIM_CS_LV
SPIM_CS
ICEU4
SN74LV2T45DCUR
SOP8/3.1/0.5
SPIM_CLK_LV
SPIM_MOSI0_LV
SPIM_CLK
SPIM_MOSI0
ICER19
10K
R0603
ICEU2
W25Q16JVSSIQ
SOP8\5.23/1.27MM
CS#
DO
WP#
GND
VCC
HOLD#
CLK
DI
SPIM_CS_LV
SPIM_MISO0
SPIM_CLK_LV
SPIM_MOSI0_LV
ICER18
10K
R0603
ICEC12
0.1u
C0603
SPI FLASH
ICER2
10K
R0603
ICER4
10K
R0603
ICEJ1
HEADER_5(NC)
DEBUG
ICER3
10K
R0603
ICEC9
1u
C0603
RESET
ICEUP1
AMS1117_3.3v
USB_HS_VBUS
ICED1
SS24A
ICE5V
ICECT1
10uF/10V
TANT-A
MCUVCC
ICEVCC
ICEJPR1
1&2 (0 ohm)
ICEJPR2
1&2 (0 ohm)
ICEUP2
ACE1117_ADJ
ICEL1
FERRITE BEAD
ICECT2
10uF/10V
TANT-A
ICER8
120,1%
R0603
ICECT3
10uF/10V
ICER9
82, 1%
R0603
Power Switch
NULINK_ID0
NULINK_ID1
Nu-Trace, ID0 = 1, ID1 = 1
Nu-Link2, ID0 = 0, ID1 = 1
Nu-LInk2-Me, ID0 = 0, ID1 = 0
NULINK ID
ICESW2
SMD HPS604-E
ICE_RX_S
ICE_TX_S
ICE_RX
ICE_TX
MSG_EN
VCOM SWITCH
ICEC10
20p
C0603
HXT_O
ICEX1
12MHz SMD X3225B
ICEC11
20p
C0603
HXT_I
12M Crystal
USB_HS_VBUS
ICEJ2
HEADER04(NC)
DM
DP
USB_HS_D-
USB_HS_D+
ICER6
ICER7
ICEJ3
micro USB 5pin
MICRO_USB_AB
ICEL2
FERRITE BEAD
L0603
ICED3
0.1u
C0603
USB 2.0 HIGH SPEED DEVICES
ICER5
10K
R0603
ICESW1
3x6x5 2PIN SMD
SW-2P-SMD
KEY1
KEY
ICES0
0805 LED R (红光) 高亮
KP-2012
ICELED
ICES1
0805 LED Y (黄光)高亮
KP-2012
ISPLED
ICES2
0805 LED R (红光) 高亮
KP-2012
RED
ICES3
0805 LED G (绿光) 高亮
KP-2012
GREEN
ICERP1
8P4R-330
8P4RA
LED
MCUVCC
ICED4
SS24A
MCUVCC_DIODE
ICEJ4
HEADER 2.54 5X2 (NC)
SWDH_DAT
SWDH_CLK
SWDH_RST#
ETMD3_SS
I2C1_SCL
QSPI_SS
BUSY
ETMD2_CK
I2C1_SDA
QSPI_CLK
START
SWO
ICE_RX_S
ICE_RX
ETMCK_MOSI
UART0_RX
QSPI_MOSI
PASS
ICE_TX_S
ICE_TX
ETMD0_MISO
UART0_TX
QSPI_MISO
FAIL
ICE INTERFACE
nuvoTon
Title
Nu-Link2-Me
Size
A3
File Name :
Nu-Link2-Me
Author :
CACHEN
Rev
1.0
Date:
Wednesday, February 12, 2020
Sheet 1 of 3

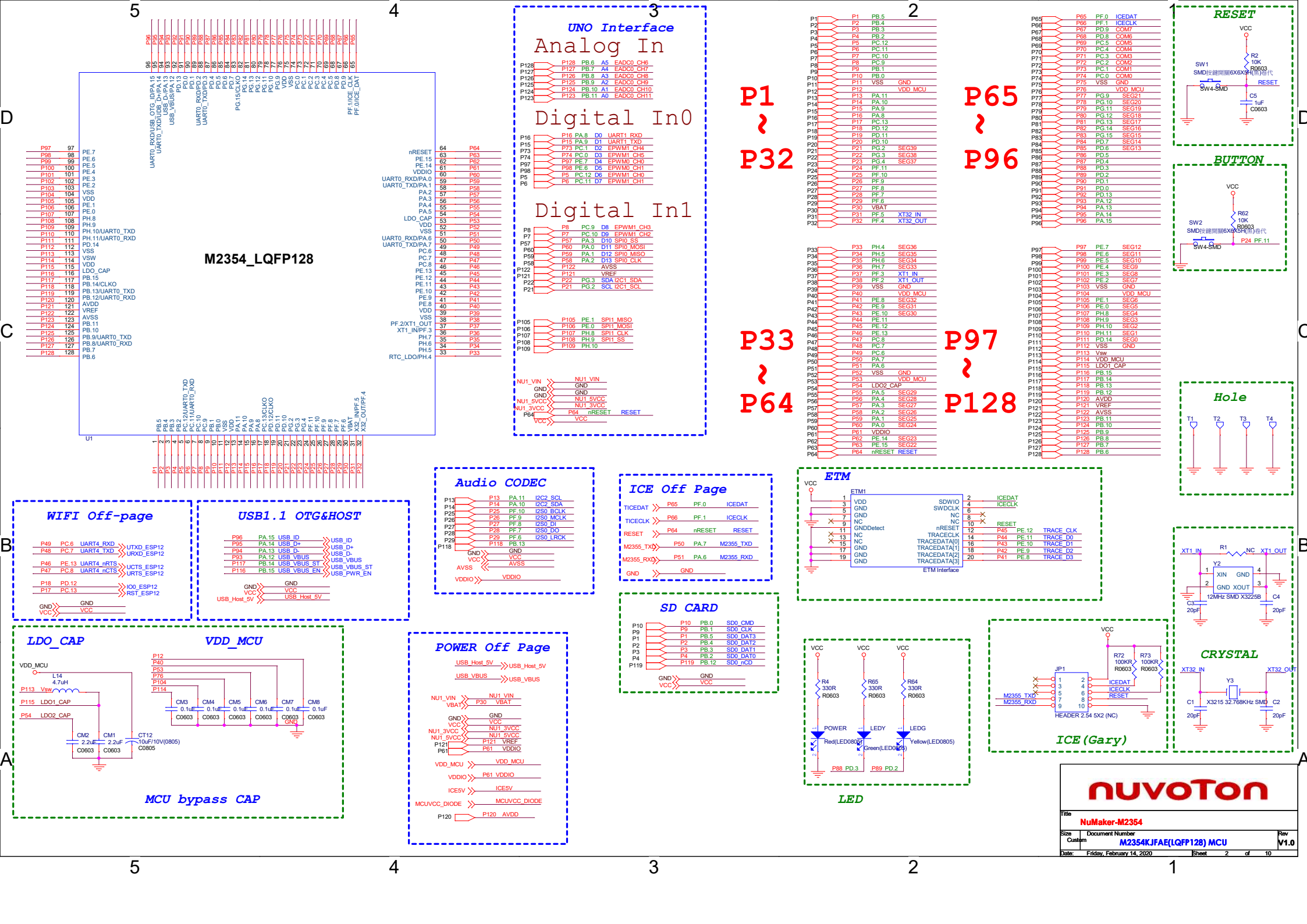
M2354_LQFP128
UNO Interface
Analog In
Digital In0
Digital In1
P1 ~ P32
P65 ~ P96
P33 ~ P64
P97 ~ P128
RESET
BUTTON
Hole
WIFI Off-page
USB1.1 OTG&HOST
Audio CODEC
ICE Off Page
SD CARD
ETM
LDO_CAP
VDD_MCU
MCU bypass CAP
POWER Off Page
LED
CRYSTAL
ICE(Gary)
NuMaker-M2354
M2354KJFAE(LQFP128) MCU
Friday, February 14, 2020

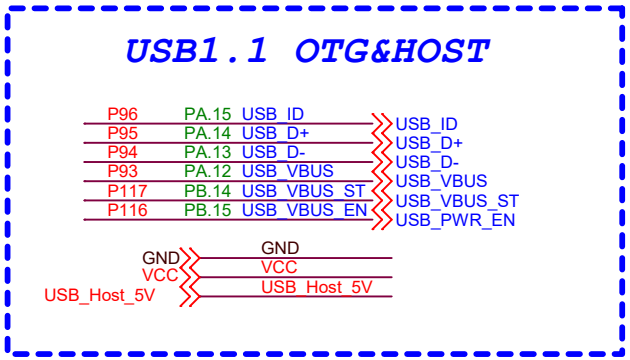

USB1.1 OTG HOST/DEVICE

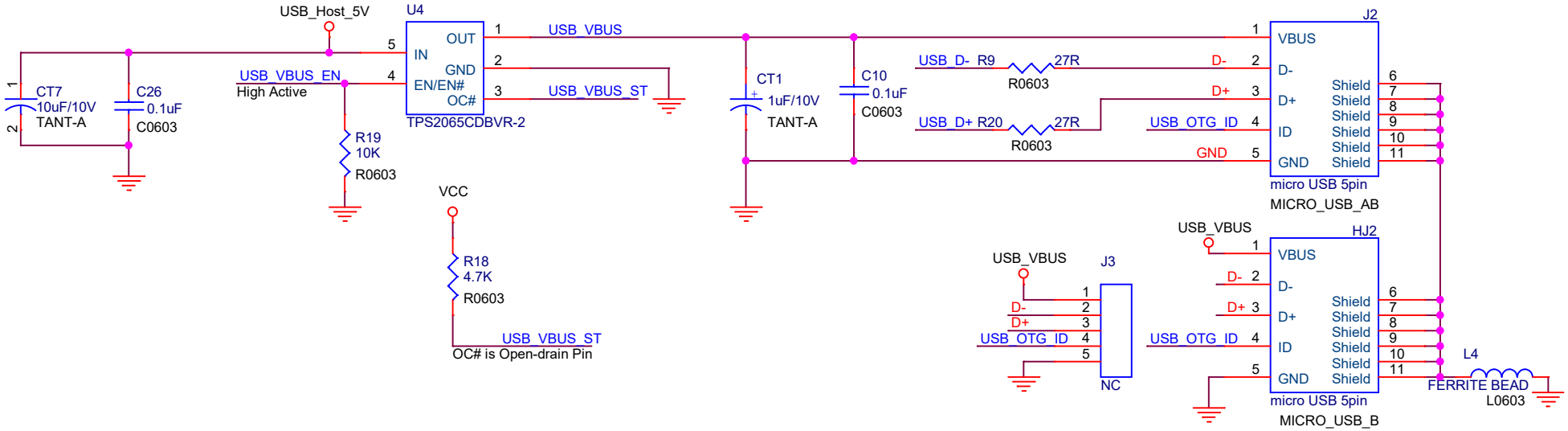

Title: NuMaker-M2354		
Size: A4	Document Number: USB OTG	Rev: V1.0
Date: Wednesday, February 12, 2020	Sheet 3 of 10	

Power Connector

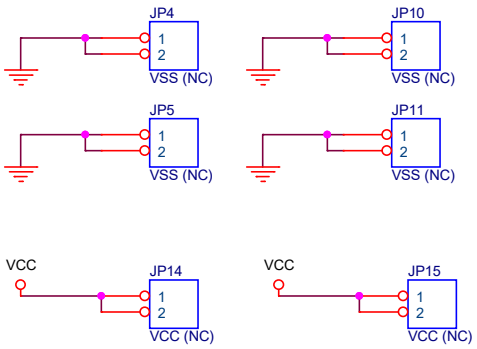

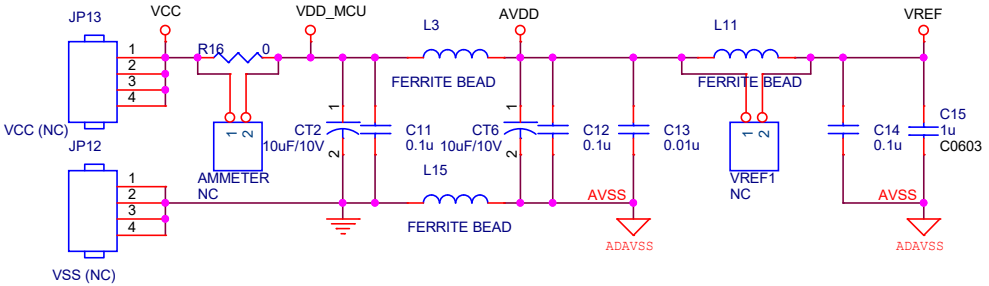

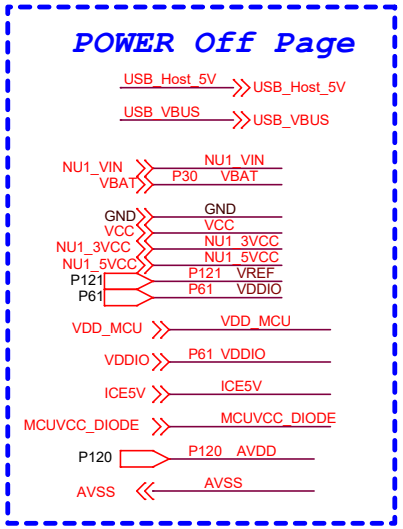

Power Selector

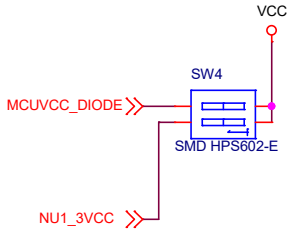

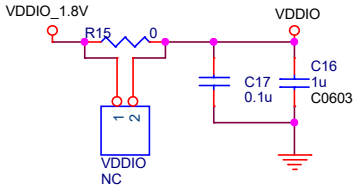

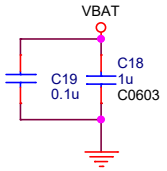

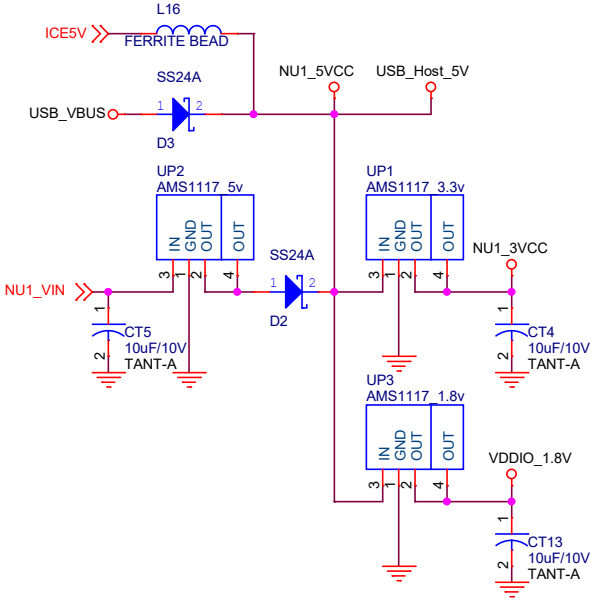

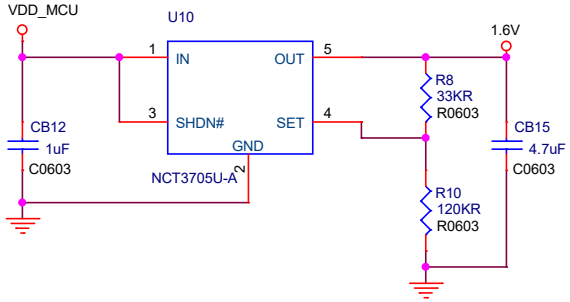

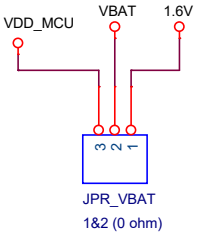

nuvoTon

Title: NuMaker-M2354		
Size: Custom	Document Number: POWER	Rev: V1.0
Date: Monday, March 16, 2020	Sheet 4 of 10	

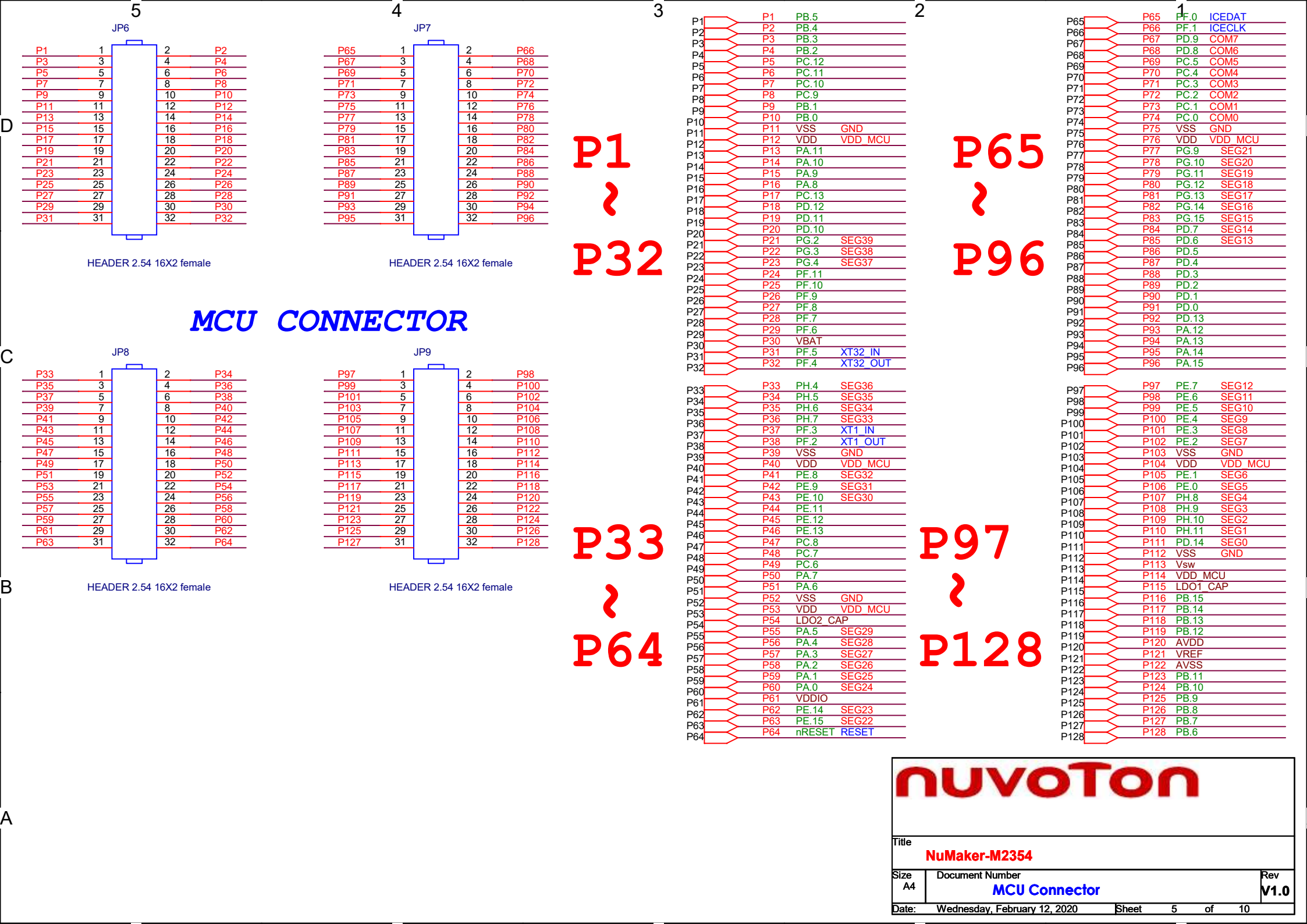
5
4
3
2
1
D
C
B
A
JP6
P1 1 2 P2
P3 3 4 P4
P5 5 6 P6
P7 7 8 P8
P9 9 10 P10
P11 11 12 P12
P13 13 14 P14
P15 15 16 P16
P17 17 18 P18
P19 19 20 P20
P21 21 22 P22
P23 23 24 P24
P25 25 26 P26
P27 27 28 P28
P29 29 30 P30
P31 31 32 P32
HEADER 2.54 16X2 female
JP7
P65 1 2 P66
P67 3 4 P68
P69 5 6 P70
P71 7 8 P72
P73 9 10 P74
P75 11 12 P76
P77 13 14 P78
P79 15 16 P80
P81 17 18 P82
P83 19 20 P84
P85 21 22 P86
P87 23 24 P88
P89 25 26 P90
P91 27 28 P92
P93 29 30 P94
P95 31 32 P96
HEADER 2.54 16X2 female
P1 ~ P32
P65 ~ P96
MCU CONNECTOR
JP8
P33 1 2 P34
P35 3 4 P36
P37 5 6 P38
P39 7 8 P40
P41 9 10 P42
P43 11 12 P44
P45 13 14 P46
P47 15 16 P48
P49 17 18 P50
P51 19 20 P52
P53 21 22 P54
P55 23 24 P56
P57 25 26 P58
P59 27 28 P60
P61 29 30 P62
P63 31 32 P64
HEADER 2.54 16X2 female
JP9
P97 1 2 P98
P99 3 4 P100
P101 5 6 P102
P103 7 8 P104
P105 9 10 P106
P107 11 12 P108
P109 13 14 P110
P111 15 16 P112
P113 17 18 P114
P115 19 20 P116
P117 21 22 P118
P119 23 24 P120
P121 25 26 P122
P123 27 28 P124
P125 29 30 P126
P127 31 32 P128
HEADER 2.54 16X2 female
P33 ~ P64
P97 ~ P128
P1 P1 PB.5
P2 P2 PB.4
P3 P3 PB.3
P4 P4 PB.2
P5 P5 PC.12
P6 P6 PC.11
P7 P7 PC.10
P8 P8 PC.9
P9 P9 PB.1
P10 P10 PB.0
P11 P11 VSS GND
P12 P12 VDD VDD_MCU
P13 P13 PA.11
P14 P14 PA.10
P15 P15 PA.9
P16 P16 PA.8
P17 P17 PC.13
P18 P18 PD.12
P19 P19 PD.11
P20 P20 PD.10
P21 P21 PG.2 SEG39
P22 P22 PG.3 SEG38
P23 P23 PG.4 SEG37
P24 P24 PF.11
P25 P25 PF.10
P26 P26 PF.9
P27 P27 PF.8
P28 P28 PF.7
P29 P29 PF.6
P30 P30 VBAT
P31 P31 PF.5 XT32_IN
P32 P32 PF.4 XT32_OUT
P33 P33 PH.4 SEG36
P34 P34 PH.5 SEG35
P35 P35 PH.6 SEG34
P36 P36 PH.7 SEG33
P37 P37 PF.3 XT1_IN
P38 P38 PF.2 XT1_OUT
P39 P39 VSS GND
P40 P40 VDD VDD_MCU
P41 P41 PE.8 SEG32
P42 P42 PE.9 SEG31
P43 P43 PE.10 SEG30
P44 P44 PE.11
P45 P45 PE.12
P46 P46 PE.13
P47 P47 PC.8
P48 P48 PC.7
P49 P49 PC.6
P50 P50 PA.7
P51 P51 PA.6
P52 P52 VSS GND
P53 P53 VDD VDD_MCU
P54 P54 LDO2_CAP
P55 P55 PA.5 SEG29
P56 P56 PA.4 SEG28
P57 P57 PA.3 SEG27
P58 P58 PA.2 SEG26
P59 P59 PA.1 SEG25
P60 P60 PA.0 SEG24
P61 P61 VDDIO
P62 P62 PE.14 SEG23
P63 P63 PE.15 SEG22
P64 P64 nRESET RESET
P65 P65 PF.0 ICEDAT
P66 P66 PF.1 ICECLK
P67 P67 PD.9 COM7
P68 P68 PD.8 COM6
P69 P69 PC.5 COM5
P70 P70 PC.4 COM4
P71 P71 PC.3 COM3
P72 P72 PC.2 COM2
P73 P73 PC.1 COM1
P74 P74 PC.0 COM0
P75 P75 VSS GND
P76 P76 VDD VDD_MCU
P77 P77 PG.9 SEG21
P78 P78 PG.10 SEG20
P79 P79 PG.11 SEG19
P80 P80 PG.12 SEG18
P81 P81 PG.13 SEG17
P82 P82 PG.14 SEG16
P83 P83 PG.15 SEG15
P84 P84 PD.7 SEG14
P85 P85 PD.6 SEG13
P86 P86 PD.5
P87 P87 PD.4
P88 P88 PD.3
P89 P89 PD.2
P90 P90 PD.1
P91 P91 PD.0
P92 P92 PD.13
P93 P93 PA.12
P94 P94 PA.13
P95 P95 PA.14
P96 P96 PA.15
P97 P97 PE.7 SEG12
P98 P98 PE.6 SEG11
P99 P99 PE.5 SEG10
P100 P100 PE.4 SEG9
P101 P101 PE.3 SEG8
P102 P102 PE.2 SEG7
P103 P103 VSS GND
P104 P104 VDD VDD_MCU
P105 P105 PE.1 SEG6
P106 P106 PE.0 SEG5
P107 P107 PH.8 SEG4
P108 P108 PH.9 SEG3
P109 P109 PH.10 SEG2
P110 P110 PH.11 SEG1
P111 P111 PD.14 SEG0
P112 P112 VSS GND
P113 P113 Vsw
P114 P114 VDD_MCU
P115 P115 LDO1_CAP
P116 P116 PB.15
P117 P117 PB.14
P118 P118 PB.13
P119 P119 PB.12
P120 P120 AVDD
P121 P121 VREF
P122 P122 AVSS
P123 P123 PB.11
P124 P124 PB.10
P125 P125 PB.9
P126 P126 PB.8
P127 P127 PB.7
P128 P128 PB.6
nuvoTon
Title
NuMaker-M2354
Size A4
Document Number
MCU Connector
Rev V1.0
Date: Wednesday, February 12, 2020
Sheet 5 of 10

UNO Interface

Analog In

P128	P128	PB.6	A5	EADC0_CH6
P127	P127	PB.7	A4	EADC0_CH7
P126	P126	PB.8	A3	EADC0_CH8
P125	P125	PB.9	A2	EADC0_CH9
P124	P124	PB.10	A1	EADC0_CH10
P123	P123	PB.11	A0	EADC0_CH11

Digital In0

P16	P16	PA.8	D0	UART1_RXD
P15	P15	PA.9	D1	UART1_TXD
P73	P73	PC.1	D2	EPWM1_CH4
P74	P74	PC.0	D3	EPWM1_CH5
P97	P97	PE.7	D4	EPWM0_CH0
P98	P98	PE.6	D5	EPWM0_CH1
P5	P5	PC.12	D6	EPWM1_CH0
P6	P6	PC.11	D7	EPWM1_CH1

Digital In1

P8	P8	PC.9	D8	EPWM1_CH3
P7	P7	PC.10	D9	EPWM1_CH2
P57	P57	PA.3	D10	SPI0_SS
P60	P60	PA.0	D11	SPI0_MOSI
P59	P59	PA.1	D12	SPI0_MISO
P58	P58	PA.2	D13	SPI0_CLK
P122	P122			AVSS
P121	P121			VREF
P22	P22	PG.3	SDA	I2C1_SDA
P21	P21	PG.2	SCL	I2C1_SCL

P105	P105	PE.1		SPI1_MISO
P106	P106	PE.0		SPI1_MOSI
P107	P107	PH.8		SPI1_CLK
P108	P108	PH.9		SPI1_SS
P109	P109	PH.10		

NU1_VIN	NU1_VIN		
GND	GND		
GND	GND		
NU1_5VCC	NU1_5VCC		
NU1_3VCC	NU1_3VCC		
P64	P64	nRESET	RESET
VCC	VCC		

NU1

VCC	1	NC	
VCC	2	VDD	
RESET	3	MCU_RESET	
NU1_3VCC	4	3VCC	NU1_3VCC
NU1_5VCC	5	5VCC	NU1_5VCC
	6	VSS	
GND	7	VSS	GND
NU1_VIN	8	VIN	NU1_VIN

HEADER 2.54 8X1 female

NU3

I2C_SCL	10	P21	PG.2	SCL I2C1_SCL
I2C_SDA	9	P22	PG.3	SDA I2C1_SDA
VREF	8	P121		VREF
VSS	7	P122		AVSS
D13	6	P58	PA.2	D13 SPI0_CLK
D12	5	P59	PA.1	D12 SPI0_MISO
D11	4	P60	PA.0	D11 SPI0_MOSI
D10	3	P57	PA.3	D10 SPI0_SS
D9	2	P7	PC.10	D9 EPWM1_CH2
D8	1	P8	PC.9	D8 EPWM1_CH3

HEADER 2.54 10X1 female

NU2

P123	PB.11	A0	EADC0_CH11	1 A0
P124	PB.10	A1	EADC0_CH10	2 A1
P125	PB.9	A2	EADC0_CH9	3 A2
P126	PB.8	A3	EADC0_CH8	4 A3
P127	PB.7	A4	EADC0_CH7	5 A4
P128	PB.6	A5	EADC0_CH6	6 A5

HEADER 2.54 6X1 female

NU4

D7	8	P6	PC.11	D7 EPWM1_CH1
D6	7	P5	PC.12	D6 EPWM1_CH0
D5	6	P98	PE.6	D5 EPWM0_CH1
D4	5	P97	PE.7	D4 EPWM0_CH0
D3	4	P74	PC.0	D3 EPWM1_CH5
D2	3	P73	PC.1	D2 EPWM1_CH4
D1	2	P15	PA.9	D1 UART1_TXD
D0	1	P16	PA.8	D0 UART1_RXD

HEADER 2.54 8X1 female

NU5

P105	PE.1	SPI1_MISO	1	SPI1_MISO	2	VCC	
P107	PH.8	SPI1_CLK	3	SPI1_CLK	4	P106	PE.0 SPI1_MOSI
		RESET	5	RESET	6	GND	
P108	PH.9	SPI1_SS	7	SPI1_SS	8	P109	PH.10

header 2.54 2X4 male

UNO INTERFACE CONNECTOR

nuvoTon

Title	NuMaker-M2354	
Size: A	Document Number: UNO Interface	Rev: V1.0
Date: Wednesday, February 12, 2020	Sheet 6 of 10	

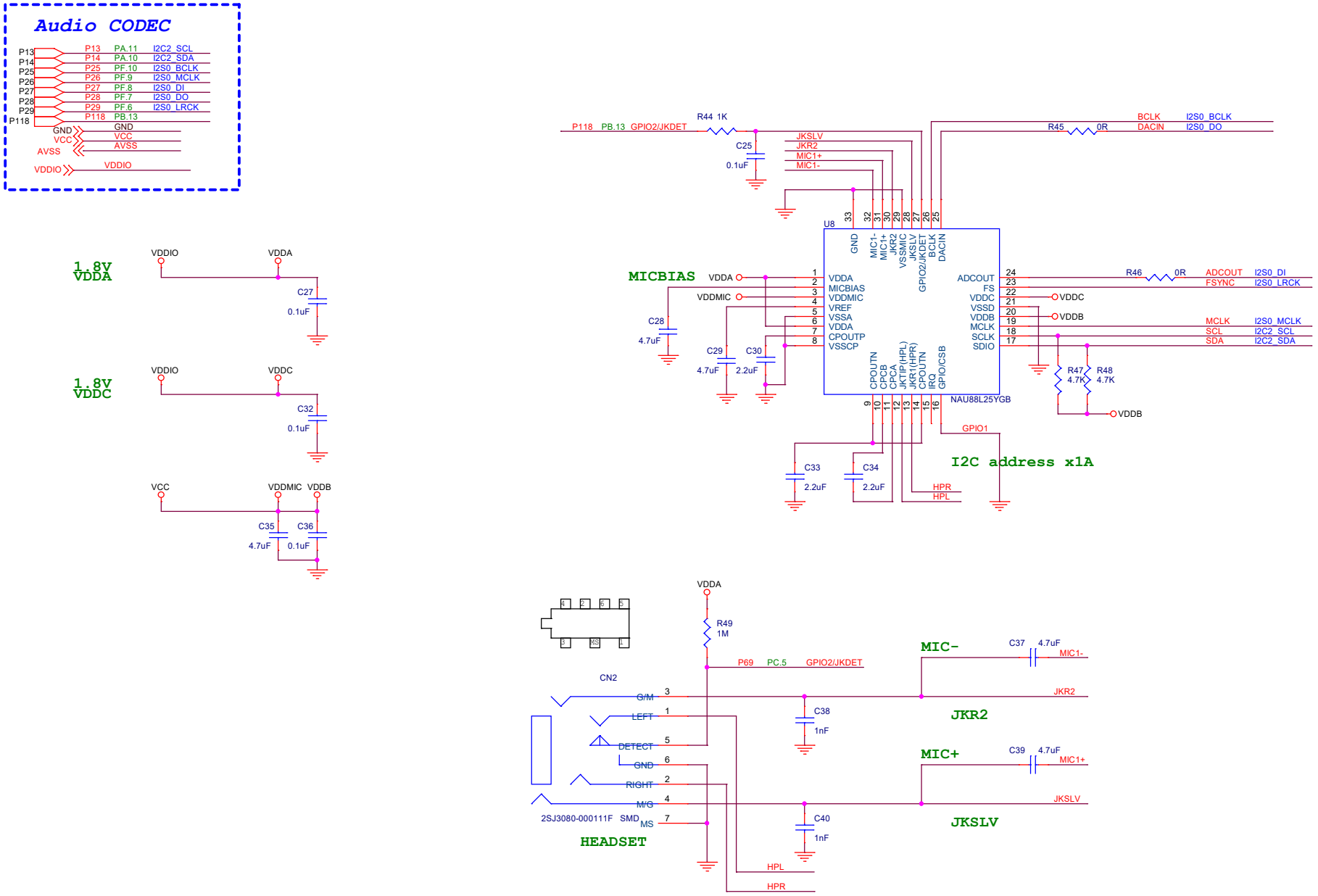

Title	NuMaker-M2354		
Size A3	Document Number Audio Codec		Rev V1.0
Date: Friday, February 21, 2020	Sheet 7 of 10		

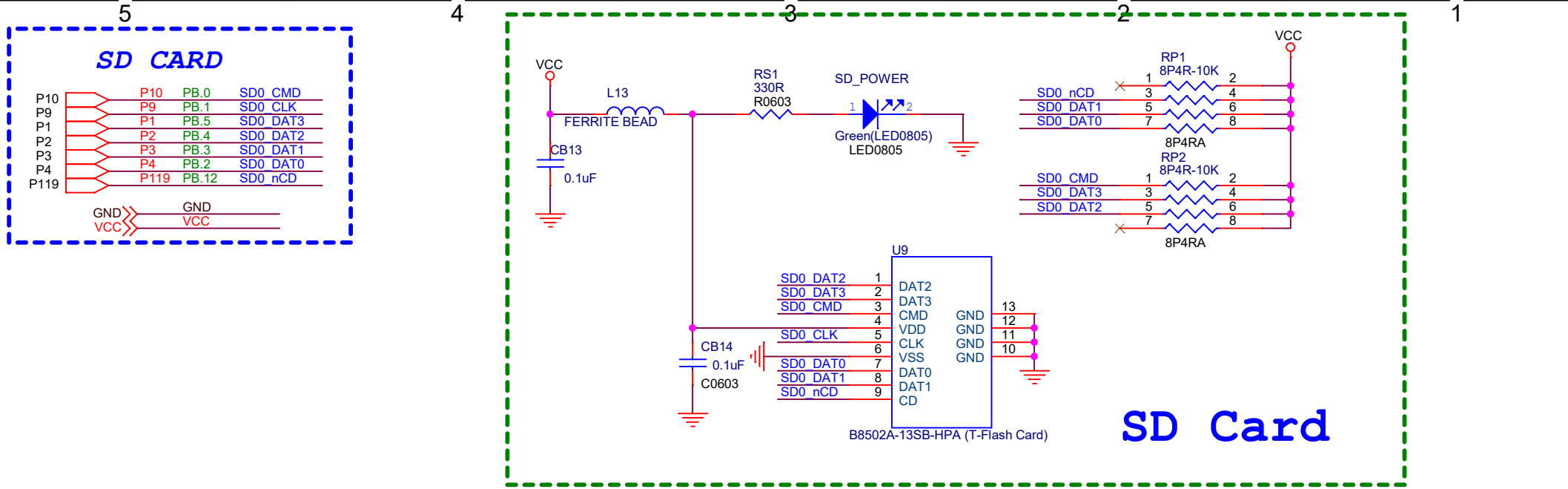

Title	NuMaker-M2354
Size	A4
Document Number	SD Card
Rev	V1.0
Date:	Wednesday, February 12, 2020
Sheet	8 of 10

WIFI Off-page

P49 PC.6 UART4_RXD → UTXD_ESP12
P48 PC.7 UART4_TXD → URXD_ESP12
P46 PE.13 UART4_nRTS → UCTS_ESP12
P47 PC.8 UART4_nCTS → URTS_ESP12
P18 PD.12 → IO0_ESP12
P17 PC.13 → RST_ESP12
GND → GND
VCC → VCC

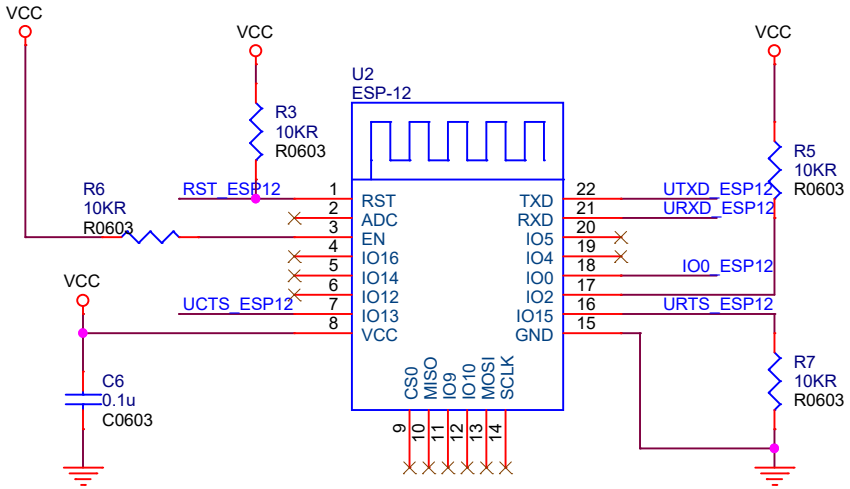

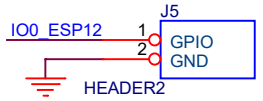

nuvoTon

Title: NuMaker-M2354		
Size: A4	Document Number: WIFI Module(ESP-12)	Rev: V1.0
Date: Wednesday, February 12, 2020	Sheet 9 of 10	