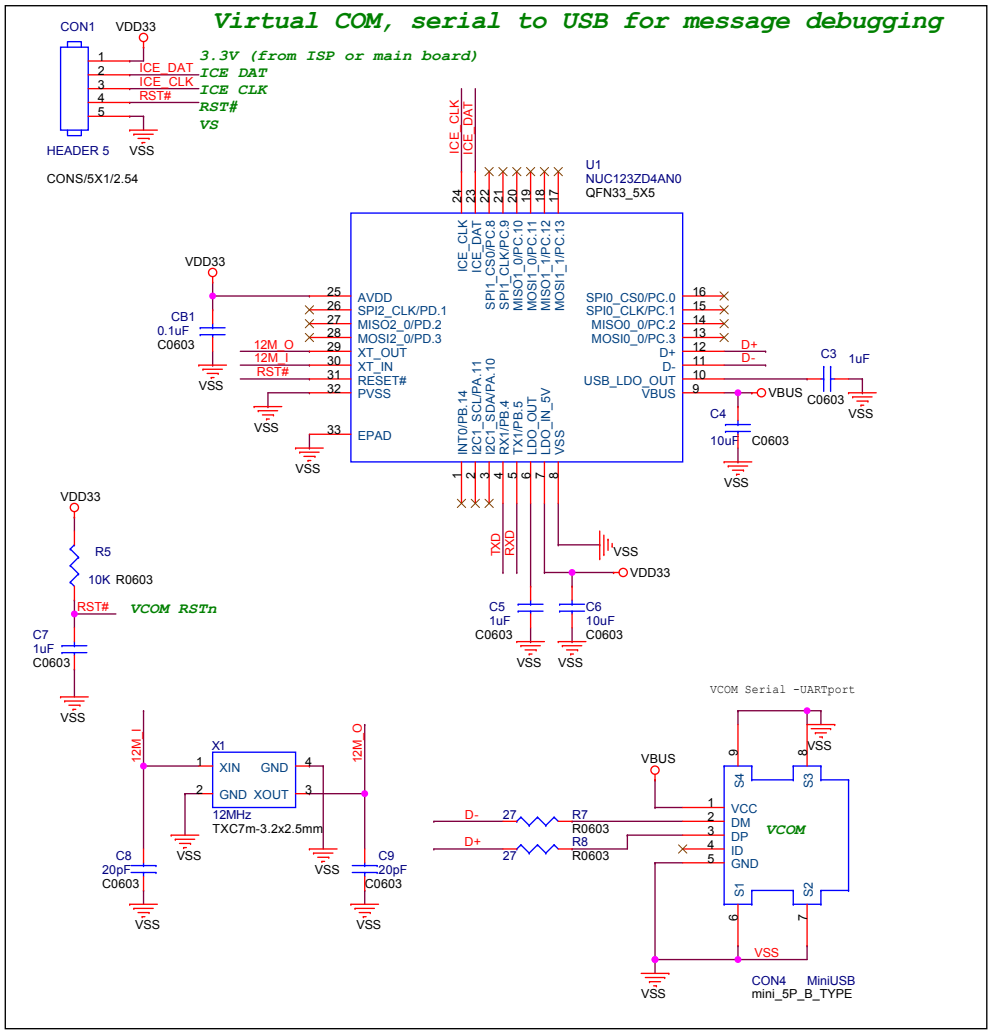

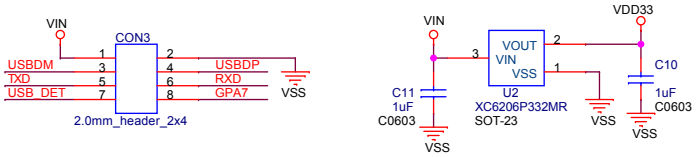

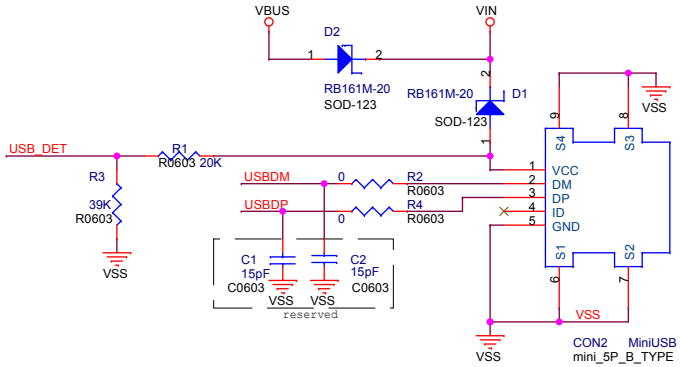

PC communication (SPI flash programming or update)

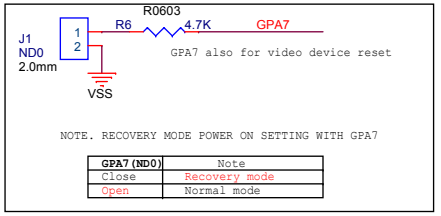

<OrgName>		
B	Nu-CAM	
Size	Document Number: Tools VCOM & USB	Rev 1.0
Date: Tuesday, June 07, 2016	Sheet 1 of 1	