Locutus MSK Modem: Symbol Synchronization Lock

Summary

Synchronization detection is an important metric for communications systems. It provides a mechanism to qualify received data as invalid or possibly valid. That is, if synchronization is unlocked the received data is invalid, and if locked data is likely valid. Additionally lock signal at various levels in the hierarchy are especially useful in diagnosing misbehaving communication links. Here we review the synchronization lock detection in the Locutus MSK Modem/PHY.

OSI 7-Layer Model

The OSI (Open Systems Interconnect) Seen Layer model provides a framework for describing and standardizing network communication functions into layers. The figure below shows the seven layers and how computer networking functions map to each layer.

Table 1. OSI Seven Layer Model

7. Application Layer	User interface, HTTP, FTP, etc
6. Presentation Layer	Data formatting, encryption, compression
5. Session Layer	Session Management
4. Transport Layer	End-to-end connections - TCP, UDP
3. Network Layer	Routing - logical addressing (IP)
2. Data Link Layer	Point-to-Point - Ethernet II Frames using MAC addressing
1. Physical Layer	Physical medium - cables, radio waves

Symbol/Bit Lock in Ethernet

When an Ethernet cable is connected between two devices there is an indiction that the link is active via an LED on the device connector. When the cable is plugged into the first device LED does not light as the link is not yet active. When the cable is then plugged into the second device we see the LED on both devices will turn on. This is a form of Layer 1 / PHY symbol lock.

When the second connection is made the Ethernet PHY chips at each end start receiving a signal from the other end, they then negotiate link parameters like link speed (e.g. 10 Mbps, 100 Mbps, 1000 Mbps). Once the negotiation is complete the PHY chip will light the LED.

OSI Model as Applied to Opulent Voice and the Locutus MSK Modem (PHY)

The OSI model can be applied to any communications system. Some layer may not be used, or may be merged, but the framework is still useful. The table below shows the two lower layers of the OSI model as applied to the OPV stack using the Locutus MSK Modem/PHY.

PHYs and Modems

Note here that the Ethernet PHY chip mentioned previously is a modem of sorts that takes Layer 2 data frames and converts the frame bits into signals transmitted across the Ethernet cable. The Locutus MSK modem does the same taking Layer 2 frames (any Layer 2 frame, not necessarily Ethernet II frames) and converts the frame bits into signals transmitted across space using radio waves. So we can use the terms PHY and Modem interchangeably.

Table 2. OSI Seven Layer Model

Layer	Name	OPV Function
2	DataLink Layer	Opulent Voice Frame
1	PHY Layer	MSK Modem/PHY

In the Opulent Voice system the MSK Modem is equivalent to the Ethernet PHY Layer and the Opulent Voice frame is equivalent to an Ethernet II frame. Now lets consider how synchronization locks are applied in this system.

Symbol Locks and Frame Locks

Layer 2 OPV Frame Sync Lock

The OPV frame has a synchronization preamble that is detected at the receiver. Frame synchronization is necessary to identify the start of incoming OPV frames which allows the frames to be decoded. The decoder only starts decoding when frame synchronization is detected, and we call this state *frame sync lock*. The frame synchronization detector continues to detect the frame sync preamble for every frame, and if it doesn't detect the frame sync at the start of the next frame *frame sync unlock* is declared, after which the frame decoder will stop decoding frames, as the received data is undefined.

Layer 1 MSK Modem Symbol Lock

The MSK Modem Transmitter takes the incoming bits of the OPV frame and translates them into I/Q symbols that are then transmitted over the wireless radio link. The MSK Modem Receiver has to then *lock* to the symbols. This process is done using a *Phase-Lock Loop* (PLL) that detects and synchronizes to the incoming radio waves. Once the PLL achieves synchronization *symbol lock* is declared and the received symbols are converted back the bits making up the OPV frame.

The *symbol lock* from the MSK receiver is an important qualifier to the OPV frame decoder. If the OPV framer decoder is receiving invalid bits because we don't have symbol lock then the framer synchronizer will be trying to lock to invalid bits from the MSK receiver. The frame synchronizer might incorrectly detect random bits as a frame sync. This results in the frame detector assuming that it has found a frame sync and will look for the sync again at the next frame. That the data is invalid can cause the frame sync detector to miss the real frame one MSK receiver symbol lock. This isn't a fatal condition, but it will mean that one or more OPV frames are losk while the frame synchronizer recovers. The frame synchronizer uses the MSK receiver symbol lock status as a gating signal to only start frame detection once symbol lock achieved.

Locutus MSK Symbol Synchronization

Costas Loop

The MSK Modem uses a two Costas Loops to detect the F1 and F2 frequencies used in MSK modulation. The Costas loop is a form of Phase-Locked Loop. The following diagram shows one of the Costas loops in the MSK modem receiver.

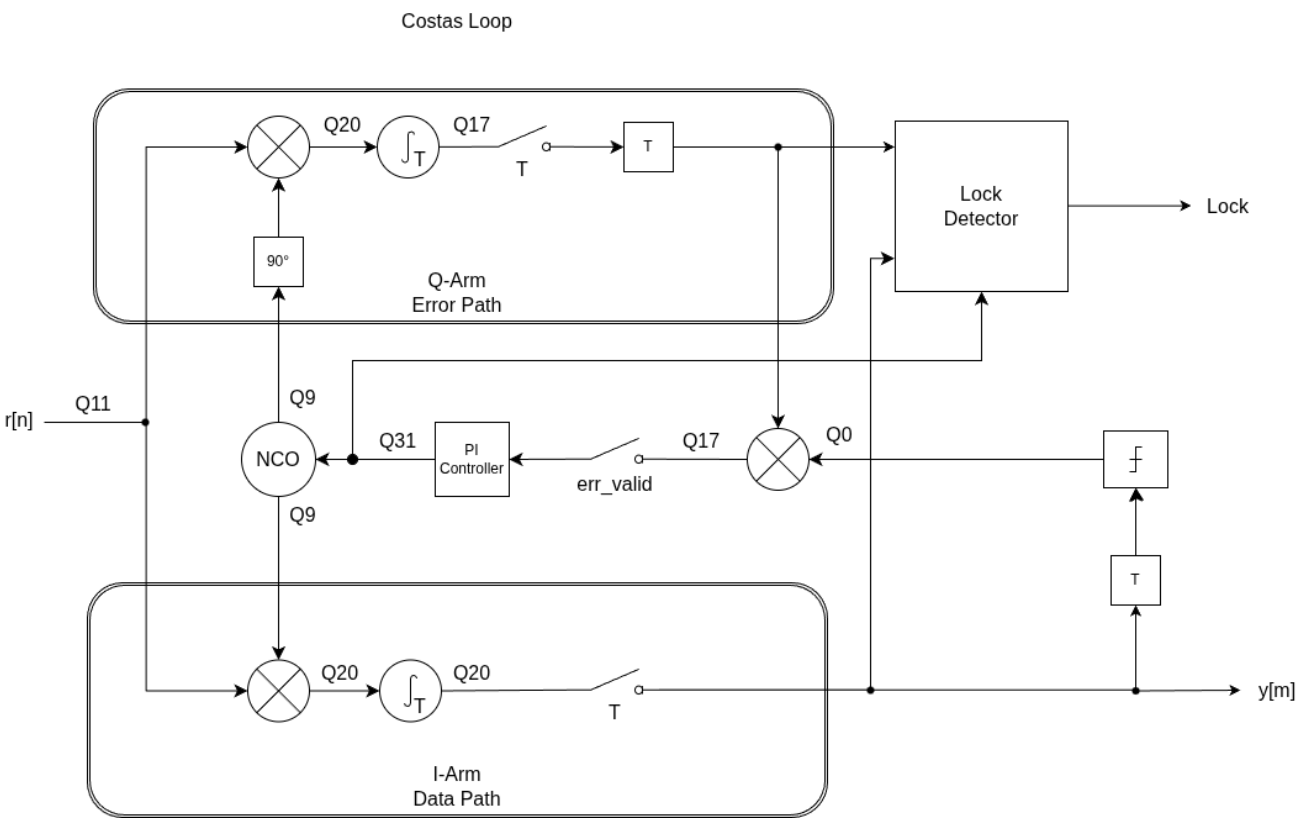

Figure 1. Image Costas Loop PLL for MSK Modem Receiver

The received MSK signal consists of a cosine wave that switches between two frequencies f_1 and f_2. For the current discussion let's assume there is only one input frequency f_x.

The Costas Loop takes the received signal and send it to two "arms", the I (in-phase) and Q (quadrature-phase). The Costas loop will then attempts to lock to the phase of the incoming signal. Phase lock also implies that the loop is frequency lock.

In-Phase Arm

The I arm mixes the incoming signal with the NCO cosine output signal and accumulates mixed signal over 1 bit time T_b. The incoming signal is

$$r_n = \cos(2\pi f_x n)$$

We can see that the NCO signal has both a frequency and phase offset from the incoming signal.

The mixed signal can be derived as follows:

$$\begin{aligned}
i_{mix} &= r_n \cdot \cos(\theta_{nco}) \\
&= \cos(2\pi f_x n) \cdot \cos(2\pi(f_x + \Delta f)n + \theta) \\
&= \frac{1}{2}[\cos(2\pi f_x n - 2\pi(f_x + \Delta f)n - \theta) + \cos(2\pi f_x n + 2\pi(f_x + \Delta f)n + \theta)] \\
&= \frac{1}{2}[\cos(-2\pi \Delta f n - \theta) + \cos(4\pi(f_x + \frac{1}{2}\Delta f)n + \theta)]
\end{aligned}$$

Then i_{mix} is the accumulated over 1 bit period (T_b). The first term is near DC and is the dominant term, while the second term is near $4f_x$. When accumulating the second term can be disregarded as it is a multiple of a full cosine wave, so the only energy accumulated is at most 1/4 to 1/2 of a single cycle. The simplified accumulation is:

$$acc_i = \sum_{T_b} \frac{1}{2}[\cos(-2\pi \Delta f n - \theta)]$$

When the loop is unlocked the accumulation will be $0 < acc_i < \frac{1}{2}T_b$, we can assume on average the accumulation will be $\approx \frac{1}{4}T_b$ with a large variance.

When the loop is locked then $\Delta f \approx 0$ and $\theta \approx 0$ which simplifies the accumulation to:

$$\begin{aligned}
acc_i &\approx \sum_{T_b} \frac{1}{2}[cos(\epsilon)] \\
&\approx \frac{1}{2}T_b
\end{aligned}$$

Quadrature Phase Arm

The Q arm computes an error signal that adjust the NCO frequency via a PI controller. This arm works similarly to the I arm where the incoming signal r_n is mixed with the sine output from the NCO (90 degree phase shift from the I arm).

$$\begin{aligned}
q_{mix} &= r_n \cdot \sin(\theta_{nco}) \\
&= \sin(2\pi f_x n) \cdot \sin(2\pi(f_x + \Delta f)n + \theta) \\
&= \frac{1}{2}[\sin(2\pi f_x n + 2\pi(f_x + \Delta f)n + \theta) - \sin(2\pi f_x n - 2\pi(f_x + \Delta f)n - \theta)] \\
&= \frac{1}{2}[\sin(4\pi(f_x + \frac{1}{2}\Delta f)n + \theta) - \sin(2\pi \Delta f n - \theta)]
\end{aligned}$$

Similar to the I arm, here in the Q arm the first term is $4f_x$ which will be a multiple of whole sine waves, with only 1/4 to 1/2 energy accumulated, and can be disregarded. The second term is near DC and will be the term that actually accumulates.

$$acc_q = \sum_{T_b} \frac{1}{2}[-\sin(2\pi\Delta fn - \theta)]$$

We can see again that when the loop is unlocked $0 < acc_q < -\frac{1}{2}T_b$, we can assume on average the accumulation will be $\approx -\frac{1}{4}T_b$ with a large variance.

And when the loop is locked $\Delta f \approx 0$ and $\theta \approx 0$ resulting in the accumulated value being:

$$\begin{aligned} acc_q &= \sum_{T_b} \frac{1}{2}[-\sin(\epsilon)] \\ &\approx 0 \end{aligned}$$

Symbol Sync Lock Detection

The accumulated values on both the I arm and Q arm provide a useful signal to detect symbol lock. When the loop is unlocked we can say:

$$acc_i \approx acc_q$$

And when the loop is locked:

$$acc_i \gg acc_q$$

The signs of the acc_i and acc_q may differ, we cannot do a simple comparison, so we can square them then take the difference:

$$T_{ms} = acc_i^2 - acc_q^2$$

When the loop is unlocked T_{ms} will be closer to 0, and when locked T_{ms} will be closer to acc_i^2. Since there is ambiguity we can use a programmable threshold T_{th} to set the final lock detection:

$$lock = T_{ms} > T_{th}$$

Summary

Lock status from each layer of the OSI modem can be an indication to the higher layers whether the incoming data is valid or not. While system can function just fine with proper data/frame detection

techniques using the relevant loc indicators can impove system robustness and may be necessary to meet system requirements.