Ong Zhi Long
Nicholas Lok
Kenneth Chow
Lieu Wei Ying

# Alleviator

## Transforming an ordinary table in extraordinary ways

| Transform ANY table into an ergonomic table | Different inclination angles | Automated, Efficient and Low cost |
|---|---|---|

## Problem Statement

Our product tackles the problem of inaccessible ergonomic tables. Ergonomic tables are usually costly or not well utilized due to the inconveniences associated with changing of the table's characteristics.

Our product is thus designed to be able to automatically adjust ANY table to a desired height and inclination at a low cost.

## Description of "Alleviator"

The concept of our product hinges on the automation of the structure's folding and unfolding, which thereafter determines the height and angle of inclination of the table. The automation is done through the implementation of a H-bridge switch system.

### Photos of our product

## Structural Considerations

Weight of the table is approximated to 10kg.

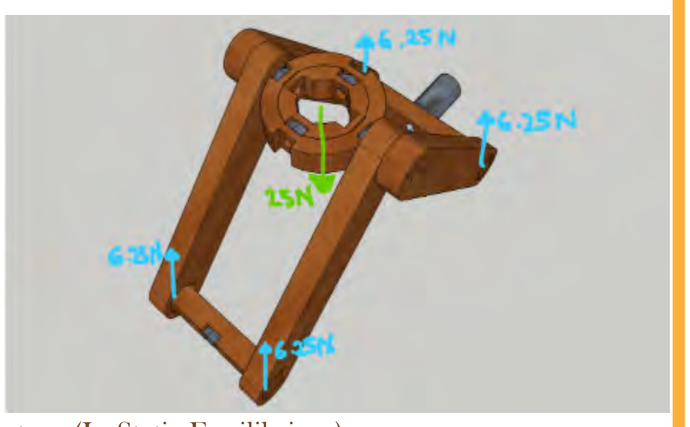


Free Body Diagrams of Structure (In Static Equilibrium)

### Reasons for using carbon fiber:

1. High ultimate tensile strength
2. Comparatively lightweight

### Internal Loading at Joint between Stainless Steel Bolt and Carbon Fibre Tube

Taking shear force at 0 degrees: 6.25N
Diameter of stainless steel bolt: 4mm
Shear Stress = Shear force/Area = 6.25 / $(\pi(2mm)^2)$ = 497.3kPa
Ultimate tensile strength of Stainless Steel = 505MPa
Since maximum shear stress < U.T.S of stainless steel, loading onto a 4mm steel bolt is feasible.

### Normal/Shear force Compression for Carbon Fibre Tube

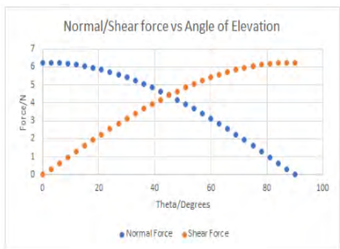


Max shear/normal stress = 6.25/(4 x 15mm x 2mm) = 52.1 kPa

Comparing the ultimate tensile strength of carbon fibre (3.5 GPa) to the maximum shear/normal force found in the graph (52.1 kPa),
we are well within the load that the carbon fibre is capable of taking.

The additional leeway is to account for dynamic loading as a safety factor.

## Electrical considerations

### Components used

1) Power supply 2) Switching regulator 3) n-type MOSFETS 4) Motor

### Converting AC to DC

- AC voltage switching adaptor to convert current from AC to DC voltage of 15V
- External switching regulator is used to convert the 15V DC voltage into a 5V DC voltage.

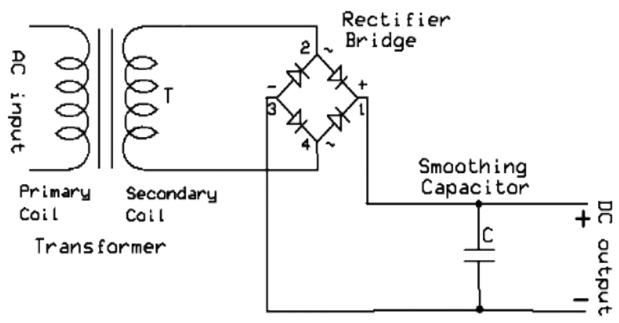


### H-Bridge Motor Driver

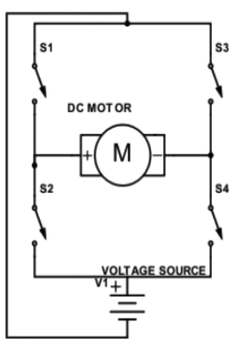


The H-Bridge motor driver is made using MOSFETs to control the direction of rotation of the motor.
A H-bridge consists of 4 switches. When switches S1 and S4 are closed, a positive voltage will be applied across the motor. When S2 and S3 are closed instead, the voltage across the motor is reversed.

| S1 | S2 | S3 | S4 | Motor Direction |
|---|---|---|---|---|
| 1 | 0 | 0 | 1 | Clockwise (current flows from left to right) |
| 0 | 1 | 1 | 0 | Counter-clockwise (current flows from right to left) |

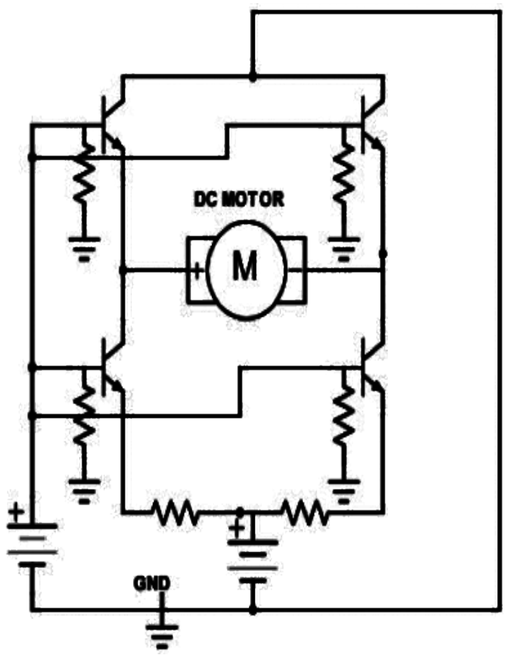


### MOSFETs H-bridge

In our prototype, this H-bridge circuit is built using n-type MOSFETs that act as switches. When $V_{GS} < V_T$, the MOSFET will act as a closed circuit and act as an opened switch when $V_{GS} > V_T$.
The MOSFETs are then controlled using the user control panel.