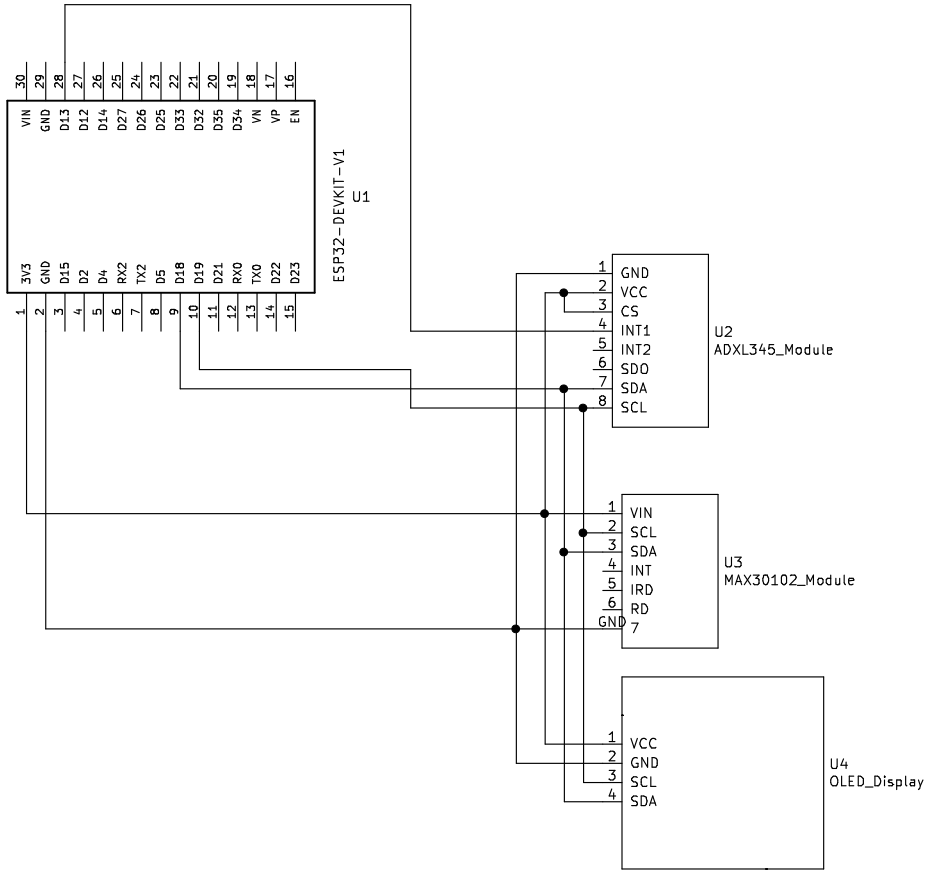

OpenSeizueDetector

Sheet: /
File: OSDWatch.sch

Title: OSD Custom Watch Proof-of-Concept Schematic

Size: A4	Date: 2018-11-30	**Rev: Draft A**
KiCad E.D.A. kicad 5.0.1-33cea8e68ubuntu18.04.1		Id: 1/1