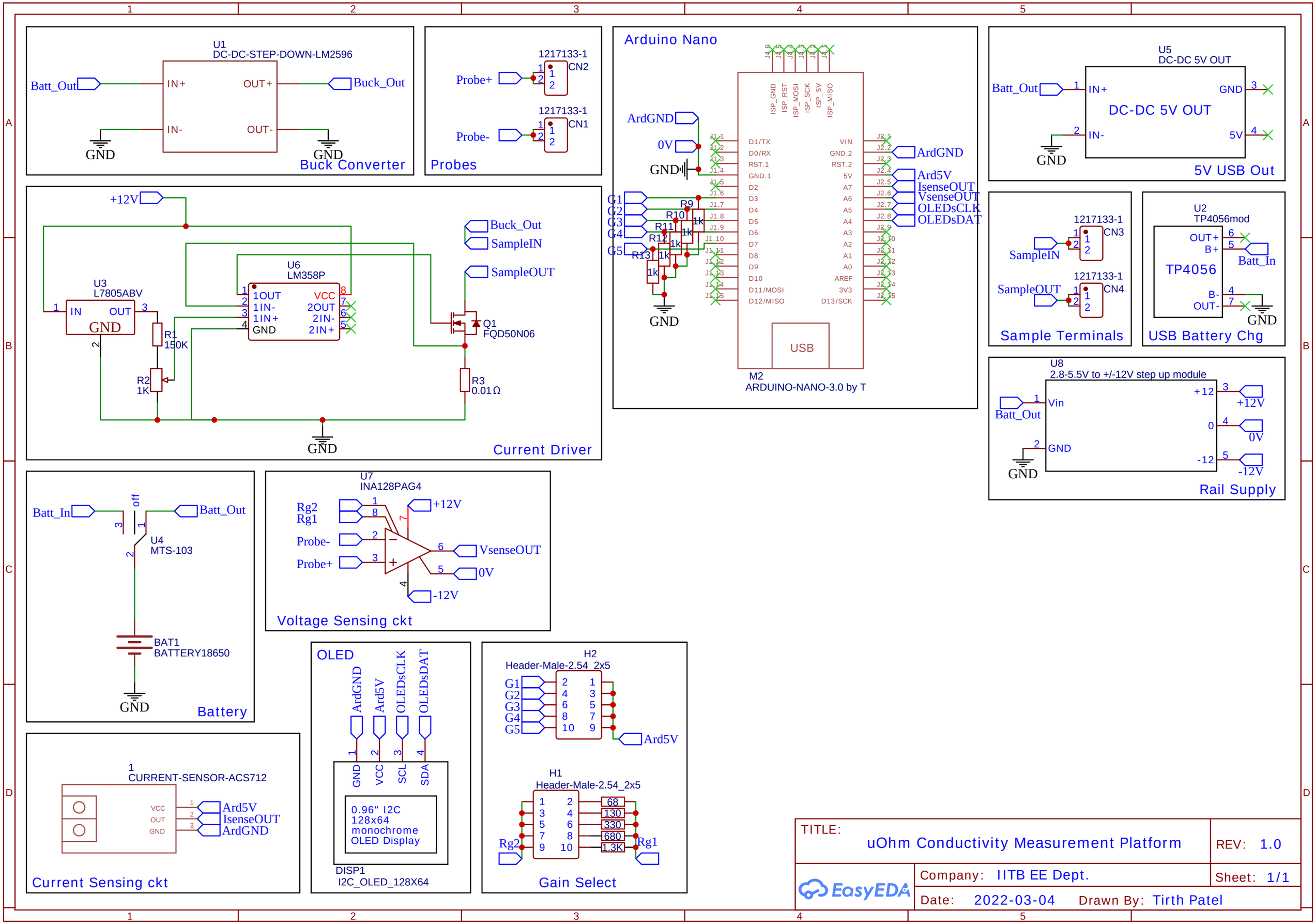
U1
DC-DC-STEP-DOWN-LM2596
Batt_Out
IN+
OUT+
Buck_Out
IN-
OUT-
GND
GND
Buck Converter
1217133-1
CN2
Probe+
1217133-1
CN1
Probe-
Probes
Arduino Nano
ISP_GND
ISP_RST
ISP_MOSI
ISP_SCK
ISP_5V
ISP_MISO
ArdGND
0V
GND
D1/TX
D0/RX
RST.1
GND.1
D2
D3
D4
D5
D6
D7
D8
D9
D10
D11/MOSI
D12/MISO
VIN
GND.2
RST.2
5V
A7
A6
A5
A4
A3
A2
A1
A0
AREF
3V3
D13/SCK
ArdGND
Ard5V
IsenseOUT
VsenseOUT
OLEDsCLK
OLEDsDAT
G1
G2
G3
G4
G5
R9
R10
R11
R12
R13
1k
USB
M2
ARDUINO-NANO-3.0 by T
U5
DC-DC 5V OUT
Batt_Out
IN+
GND
DC-DC 5V OUT
IN-
5V
GND
5V USB Out
1217133-1
CN3
SampleIN
1217133-1
CN4
SampleOUT
Sample Terminals
U2
TP4056mod
OUT+
B+
TP4056
B-
OUT-
Batt_In
GND
USB Battery Chg
+12V
U3
L7805ABV
IN
OUT
GND
R1
150K
R2
1K
U6
LM358P
1OUT
1IN-
1IN+
GND
VCC
2OUT
2IN-
2IN+
Buck_Out
SampleIN
SampleOUT
Q1
FQD50N06
R3
0.01Ω
GND
Current Driver
U8
2.8-5.5V to +/-12V step up module
Batt_Out
Vin
GND
+12
0
-12
+12V
0V
-12V
GND
Rail Supply
Batt_In
off
Batt_Out
U4
MTS-103
BAT1
BATTERY18650
GND
Battery
U7
INA128PAG4
Rg2
Rg1
Probe-
Probe+
+12V
VsenseOUT
0V
-12V
Voltage Sensing ckt
OLED
ArdGND
Ard5V
OLEDsCLK
OLEDsDAT
GND
VCC
SCL
SDA
0.96" I2C
128x64
monochrome
OLED Display
DISP1
I2C_OLED_128X64
H2
Header-Male-2.54_2x5
G1
G2
G3
G4
G5
Ard5V
H1
Header-Male-2.54_2x5
68
130
330
680
1.3K
Rg2
Rg1
Gain Select
1
CURRENT-SENSOR-ACS712
VCC
OUT
GND
Ard5V
IsenseOUT
ArdGND
Current Sensing ckt
TITLE:
uOhm Conductivity Measurement Platform
REV: 1.0
Company: IITB EE Dept.
Sheet: 1/1
Date: 2022-03-04
Drawn By: Tirth Patel
EasyEDA