onero Actuator User Guide

1. Safety and Precautions

- Operate the actuator strictly within the specified environmental conditions and the maximum allowable winding temperature range. Exceeding these limits will cause permanent and irreversible damage to the product.
- Prevent foreign objects from entering the rotor assembly, as this will cause abnormal operation of the actuator.
- Before use, inspect all components for integrity. Discontinue use immediately if any parts are missing, aged, or damaged.
- Ensure all electrical connections are correct and that the actuator is properly and securely mounted.
- Do not touch the rotating parts or electronic components of the actuator during operation to prevent accidents.
- The actuator may become hot during high-torque output. Take care to avoid burns.
- Do not disassemble the actuator. Unauthorized disassembly will adversely affect its control precision and may lead to operational failure.

2. Product Features

- All-in-one joint module with a compact structure
- Compact size, superior torque output
- High-precision 21-bit encoder
- Dual encoder system: provides absolute single-turn positioning of the output shaft; position is maintained during power loss
- Comprehensive protection: over-temperature, over-voltage, over-current, under-voltage, and timeout
- High-speed CAN 2.0 communication interfaces
- Multiple control modes: position, velocity, torque, and MIT hybrid control mode
- Wide power supply range: supports 20V to 55V input
- Flexible wiring: side-exit and rear-exit options for easy mechanical integration

3. XD5746-1/2

3.1 Dimensions

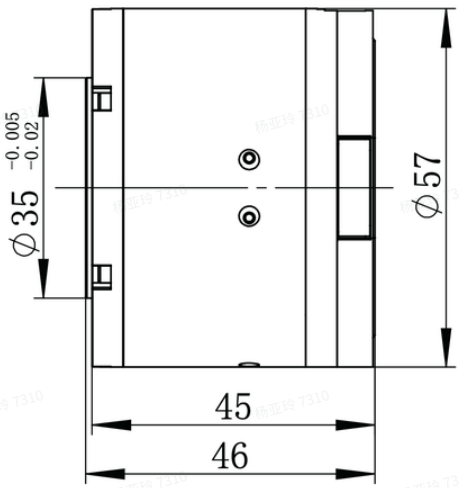

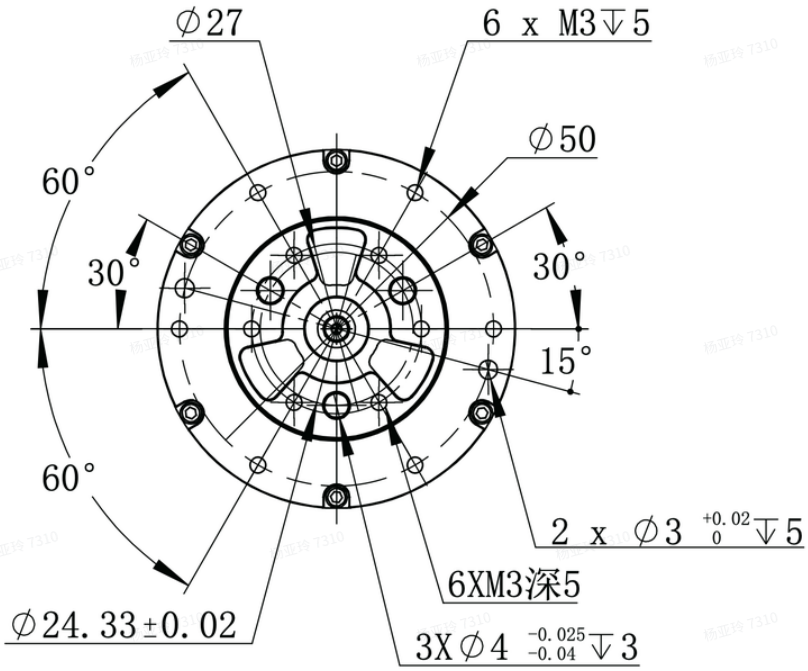

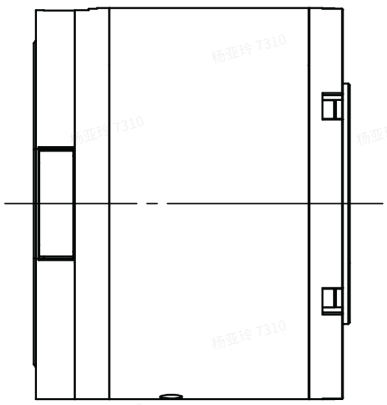

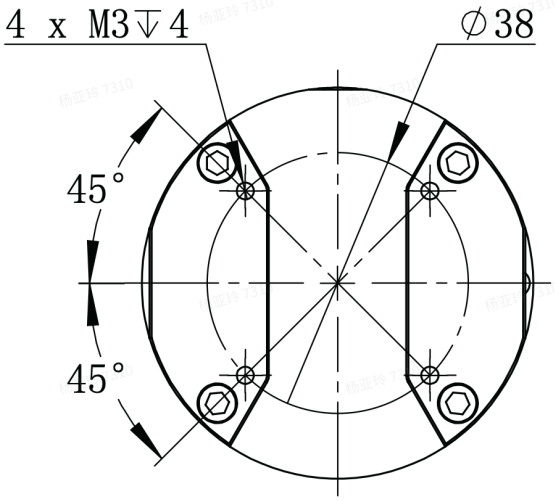

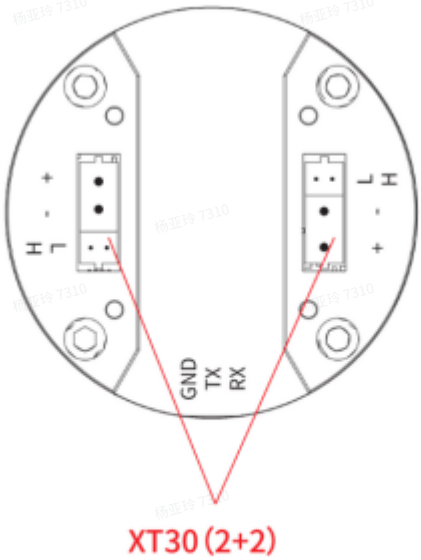

Axial cable exit

XD5746-2

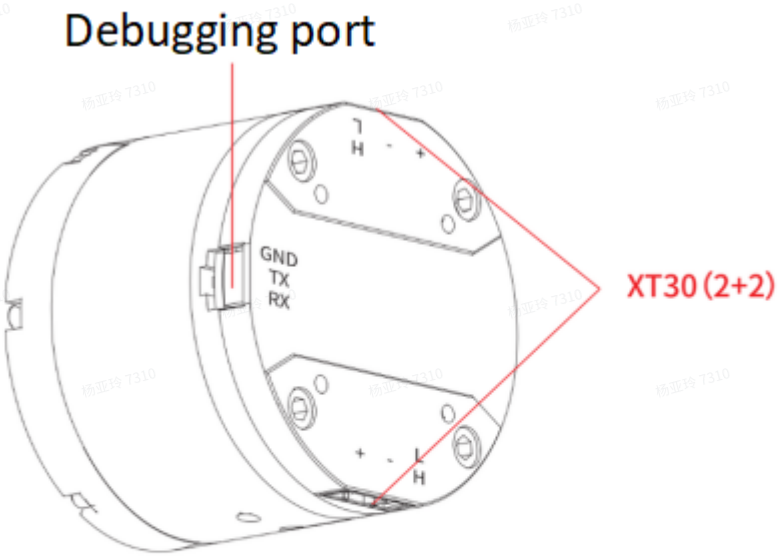

Radial cable exit

XD5746-1

3.2 Technical Specifications

Category	Item	Value
Performance Parameters	Rated Voltage	48V
	Rated Torque	3N.m
	Rated Rotational Speed	120rpm
	Rated Current	3.7A
	Operating Voltage Range	20V～55V
	Peak Torque	7N.m
	Maximum No-Load Rotational Speed	200rpm
	Peak Current	7.4A
	Number of Pole Pairs	14
	Gear Ratio	10:1
	Rotational Backlash	10 arcminutes

Mechanical Parameters	Diameter	57mm
	Height	46mm
	Total Weight	320g
	Operating Temperature	5-55°C
	Operating Humidity	RH 35% to 80%, non-condensing
Interface Parameters	Electrical Connector	CAN@1Mbps
	Communication Terminal	XT30(2+2)

4. XD5757-1/2

4.1 Dimensions

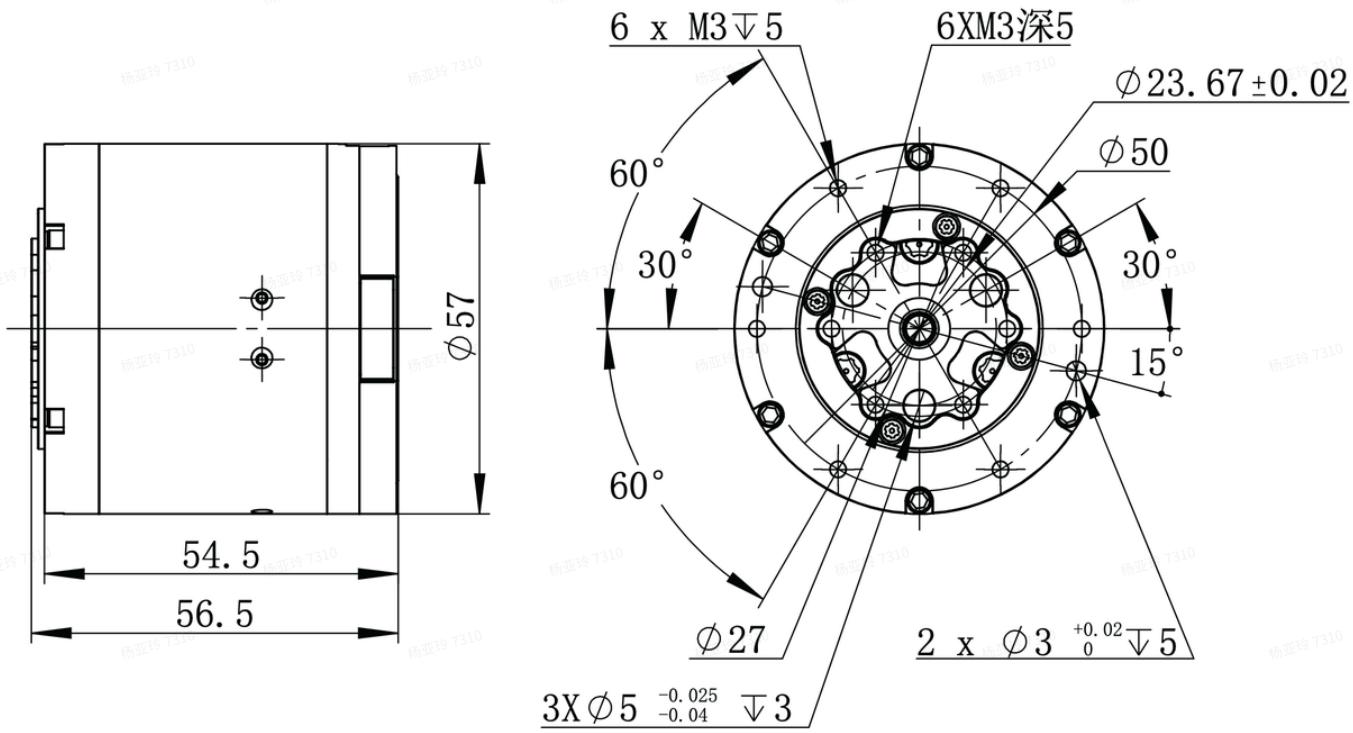

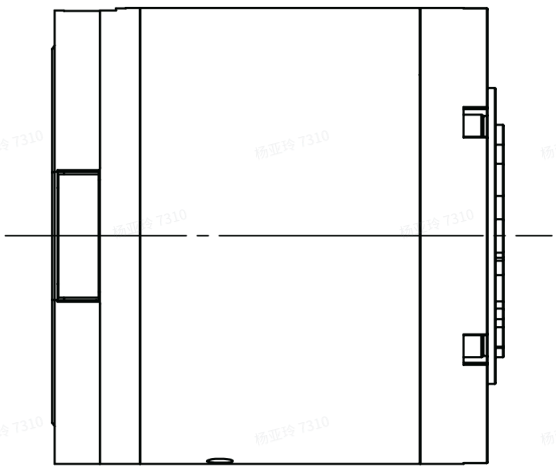

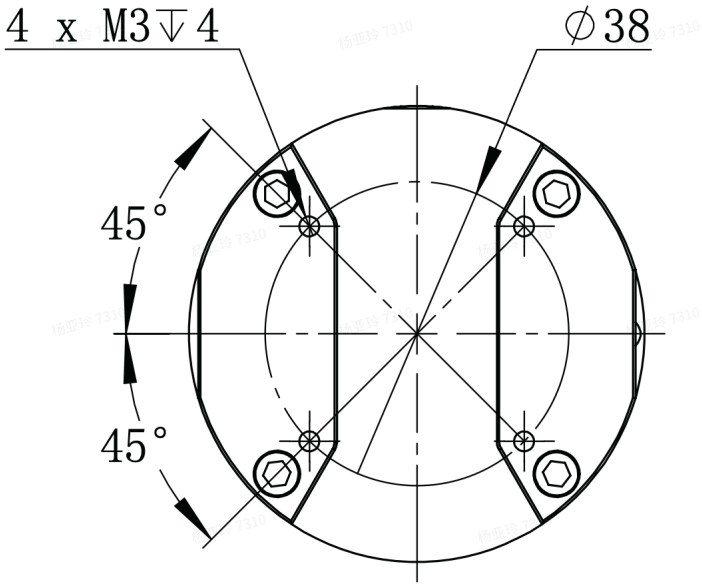

Debugging port

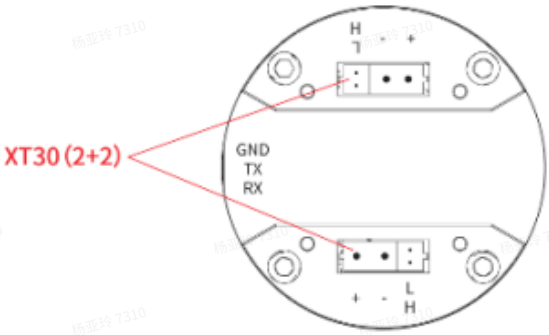

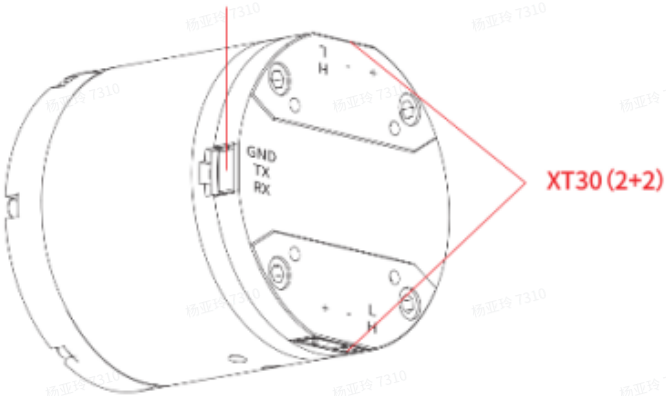

Axial cable exit

XD5757-2

Radial cable exit

XD5757-1

4.2 Technical Specifications

Category	Item	Value
Performance Parameters	Rated Voltage	48V
	Rated Torque	15N.m
	Rated Rotational Speed	25rpm
	Rated Current	3.7A
	Operating Voltage Range	20V～55V

	Peak Torque	30N.m
	Maximum No-Load Rotational Speed	200rpm
	Peak Current	7.4A
	Number of Pole Pairs	14
	Gear Ratio	48.19:1
	Rotational Backlash	20 arcminutes
Mechanical Parameters	Diameter	57mm
	Height	56.5mm
	Total Weight	390g
	Operating Temperature	5-55°C
	Operating Humidity	RH 35% to 80%, non-condensing
Interface Parameters	Electrical Connector	CAN@1Mbps
	Communication Terminal	XT30(2+2)

5. Communication Protocol

Click the link below:

https://github.com/OpenWonderLabs/RobotDoc/blob/main/Communication Protocol.pdf

6. Debugging Tool

Click the link below:

https://github.com/OpenWonderLabs/RobotDoc/blob/main/Debugging Tool Quick Guide.pdf

7. Mechanical Drawings

- XD5746-1
  - 2D Drawing:https://github.com/OpenWonderLabs/RobotDoc/blob/main/XD5746-1关节模组.pdf
  - 3D Drawing:https://github.com/OpenWonderLabs/RobotDoc/blob/main/XD5746-1.stp

- XD5746-2
  - 2D Drawing:https://github.com/OpenWonderLabs/RobotDoc/blob/main/XD5746-2关节模组.pdf
  - 3D Drawing:https://github.com/OpenWonderLabs/RobotDoc/blob/main/XD5746-2.stp
- XD5757-1
  - 2D Drawing:https://github.com/OpenWonderLabs/RobotDoc/blob/main/XD5757-1关节模组.pdf
  - 3D Drawing:https://github.com/OpenWonderLabs/RobotDoc/blob/main/XD5757-1.stp
- XD5757-2
  - 2D Drawing:https://github.com/OpenWonderLabs/RobotDoc/blob/main/XD5757-2关节模组.pdf
  - 3D Drawing:https://github.com/OpenWonderLabs/RobotDoc/blob/main/XD5757-2.stp