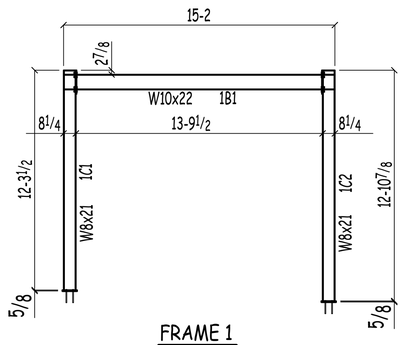


FRAME 1

PER SHEET: ASK-05

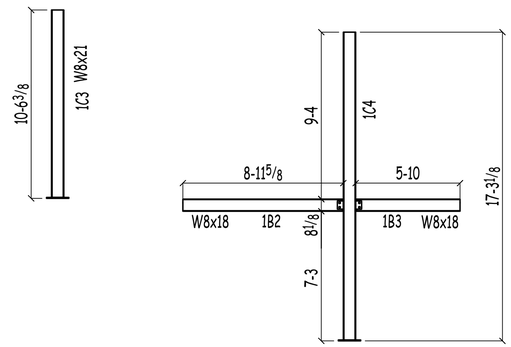


FRAME 2

PER SHEET: ASK-07

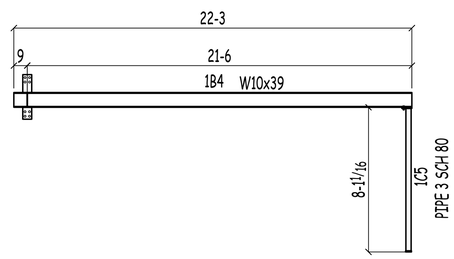


FRAME 3

PER SHEET: ASK-13

AISC CERTIFIED FABRICATOR

| REV | DATE | DESCRIPTION | DETAILER |
|---|---|---|---|
| A | 06-24-19 | REV. PER APPROVALS | LK |

NOTE:
These drawings are the property of Endres Mfg. Co. and are for the sole purpose of fabrication and installation of the products shown thereon no changes modifications or corrective measures to fabricated materials of any changes for such measures will be allowed without prior notification to and agreement with Endres Mfg. Co.

DIRECTOR NOTE:
UNLESS OTHERWISE NOTED - ALL CONNECTIONS TO BE MADE WITH A325 HIGH STRENGTH BOLTS WITH ONE HARDENED WASHER UNDER THE TURNED ELEMENT NUT OR BOLT HEAD.

SHOP NOTE:
PAINT PIECE MARK ON LEFT END AS DETAILED. ALL RE-ENTRANT CORNERS SHALL BE SHAPED NOTCH FREE TO A RADIUS OF AT LEAST 1½ INCH

| | FIELD | SHOP | APPROVAL | PRINTS |
|---|---|---|---|---|
| | | | E 06-19-19 | |
| | | | E 06-24-19 | |

| PRINTS NO. | DATE | NO. | DATE | NO. | DATE | NO. | DATE |
|---|---|---|---|---|---|---|---|
| | | | | | | | |

WIDE FLANGE (U.N.): A-992 GR-50
PARTS MATERIAL (U.N.): A-36
TUBE MATERIAL (U.N.): A-500 GR-B
SURFACE PREPARATION:
SHOP PAINT:
FIELD CONNECTIONS: AS NOTED
HOLES (U.N.): 13/16 Ø
USE NO. 70XX WELD ROD
ALL COMPLETE JOINT PENETRATION BUTT WELDS LOW HYDROGEN 7018

Endres MFG.CO.
802 Century Ave., P.O. Box 217
Waunakee, Wisconsin 53597
Hwy. Q at Village Limits
Phone (608) 849 - 4143
Fax (608) 849 - 7903

JOB: OPENING DESIGN
LOCATION: STOUGHTON, WI
CUSTOMER: AALSETH

| DETAILER | CHECKED | DATE | JOB NO. | DRWG. NO. |
|---|---|---|---|---|
| LK | MS | 06-18-19 | 8926 | E1 |

APPROVER NOTE:
The details of structural steel shown on this sheet are developed from the engineering, architectural or owners design drawings and/or specifications provided to Endres Mfg. Co. It is the professional responsibility of the approving engineer, architect or owner to verify that the sections as detailed are properly identified and that all connections developed on these detail drawings comply with the intent of the engineers, architect's or owners design.